AGENDA

Lexington Planning Board

Wednesday, August 17, 2022
This meeting will be held virtually through
https://www.lexingtonma.gov/377/Access-Virtual-Meetings
6:00 PM

Board Administration

1. **Draft Comprehensive Plan Public Work Session to review Implementation and new Land Use Section**

Development Administration

1. **1040-1050 Waltham Street – Review Signage Package**
2. **95 Hayden Ave. & 128 Spring St. (99 Hayden Ave.) – Public Hearing for Major Site Plan Review**
3. **131 Hartwell Ave. – Acceptance of performance guarantee and endorse Definitive Subdivision Plan for subdivision approved on July 13, 2022**
4. **12-18, 24 Hartwell Ave. - Acceptance of performance guarantee and endorse Definitive Subdivision Plan for subdivision approved on June 29, 2022**
5. **17 Hartwell Ave. – Acceptance of performance guarantee and endorse Definitive Subdivision Plan for subdivision approved on June 29, 2022**

Board Administration

1. **Staff Updates**
2. **Board Member Updates**
3. **Upcoming Meetings**
4. **Review of Meeting Minutes (August 3, 2022 tentative)**

Adjourn

Meeting broadcast by LexMedia

AGENDA ITEM SUMMARY

LEXINGTON PLANNING BOARD

AGENDA ITEM TITLE:

Draft Comprehensive Plan Public Work Session to review Implementation and new Land Use Section

PRESENTER:

Staff and Board Discussion

ITEM NUMBER:

SUMMARY:

The Board will review the draft implementation conclusion section of the Draft Comprehensive Plan. The Board will also discuss adding a new goal for land use objectives and strategies. The Board will complete their review of the full Draft Comprehensive Plan Volume I at this meeting. The review began on June 1st and will conclude this evening. The Board will discuss next steps. Staff and the Consultant are working on incorporating edits received throughout the summer and expect to return to present a final draft to the Planning Board in September. The goal is to review a final draft at a meeting planned for Wednesday, September 28 to focus on the final updated Plan presented in one complete plan.
Add new section for Land Use Objectives & Strategies (new goal 10)
Implementation
The drafts presented over the course of the summer can be found here along with the most up to date information: https://www.lexingtonma.gov/816/Draft-Comprehensive-Plan

SUGGESTED MOTION:

FOLLOW-UP:

DATE AND APPROXIMATE TIME ON AGENDA:

8/17/2022

ATTACHMENTS:

Description	Type

Implementation	Exhibit
Draft Land Use Goal 10	Exhibit
Land Use Inventory	Exhibit

IMPLEMENTATION

IMPLEMENTING THE COMPREHENSIVE PLAN

Implementation of a Comprehensive Plan is an on-going and long-term process requiring resources and significant effort from many entities. The above Comprehensive Plan included suggested timeframes for implementing each strategy. These timeframes should be used as a guide to help set priorities that were identified based on significant input from community stakeholders. Implementation will depend on many factors such as timing, resources, and workload of specific groups and the capacity of the lead partner. A Comprehensive Plan is intended to be a "living document" that is formally updated every 10-15 years. Throughout that time, the recommended goals, objectives, and action strategies will be regularly evaluated and acted upon.

PLAN COMPONENTS

The implementation plan is organized around nine goals, identified in the adjacent shaded box. Each goal comprises a series of objectives, or major efforts required to meet the goal. To fulfill each of the objectives, the table cites a set of strategies and associated action steps, which illustrate HOW the town can achieve the objectives and goals.

The plan has identified over _[to be filled in on final draft]__ strategies, and for each of these, a **LEAD**(s) and **PARTNER**(s) are noted. Lead persons and/or entities are tasked with directing the strategies, with assistance of partners, who will initiate the action steps. Note that where the table suggests potential leads and partners, these persons/entities may change or expand over time as the action steps commence. For some of the strategies listed, an

COMPREHENSIVE PLAN GOALS

GOAL 1: To increase the DIVERSITY, EQUITY, and to promote the INCLUSION of people visiting, living, and working in Lexington

GOAL 2: To promote a wide range of HOUSING OPTIONS that appeal to the needs of all residents, regardless of income and life stage

GOAL 3: To promote a VITAL ECONOMY, including a variety of small and large businesses that contribute to the tax base and improve the balance of services to meet the needs of residents, employees, and visitors

GOAL 4: To protect the environment and enhance long-term SUSTAINABILITY and RESILIENCY.

GOAL 5: To protect OPEN SPACES and NATURAL RESOURCES and to enhance the connections among these assets

GOAL 6: To protect, preserve, and promote awareness and appreciation of Lexington's HISTORIC and CULTURAL RESOURCES from throughout its history

GOAL 7: To make TRAVELING into, out of, and within Lexington safe, pleasant, and efficient with sustainable and equitable mobility options for all ages and abilities

GOAL 8: To improve and expand facilities for RECREATION AND COMMUNITY GATHERING to support holistic wellbeing, a sense of belonging, enhanced community connections, and fun, and to build community through social engagement

GOAL 9: To provide well maintained, updated, inclusive, and sustainable PUBLIC FACILITIES to serve and meet community needs

entirely new planning process will be needed to define roles and responsibilities of the lead(s) and partner(s).

Additionally, some strategies call for additional studies to more carefully understand the possible action steps that would best achieve the goals and objectives. Many of the strategies will require additional discussion and approval at Town Meeting. This is especially true of any changes to Lexington's General or Zoning Bylaw. Many actions will require additional funding.

IMPLEMENTATION TOOLS

IMPLEMENTATION LEAD

Town staff, primarily Planning staff, and the Planning Board are recommended to be the Plan's primary lead managers to oversee the implementation of the Comprehensive Plan. Planning staff and the Planning Board's charge will be to:

(1) oversee how the strategies and action steps are being carried out
(2) keep the plan up to date; and
(3) provide a status update in an annual "State of the Comprehensive Plan" address to update the town in the Planning Board's Annual Report.

This Plan recommends that Town departments report on the status of certain implementation items throughout the year conceivably on a quarterly basis between staff departments. Annually each year at the Planning Board could review progress on the Comprehensive Plan. This may include an update from various departments and committees on progress on certain Plan recommendations. After consideration of what other departments/committees/boards have completed and are expected to be working on, the Planning Board should develop a work plan for the next year. It is recommended the Planning Board use the Comprehensive Plan as a guide to focus on three to ten actions for a year's time. The amount of work items will depend on the selected actions and the commitments of the Partner groups noted for each strategy.

REVIEW AND REVISE ZONING

The zoning bylaw is one of the most important tools for implementing the Comprehensive Plan, therefore, it needs to be reviewed and revised so that there are no barriers to implementation of the plan and so that it actually supports achieving the plans goals and objectives.

INCREASING CAPACITY TO IMPLEMENT THE PLAN

There are many potential strategies and actions listed in the implementation plan. As a result, it may be necessary to increase the town's capacity to follow through with the steps recommended to achieve the plan's goals and objectives. Capacity can be increased in a number of ways including:

- Hiring additional staff
- Recruiting additional volunteers
- Potentially creating new task force(s) or subcommittee(s) to oversee specific efforts
- Increasing inter-departmental cooperation

DRAFT

- Exploring opportunities for additional regional cooperation on such topics as transportation planning, electricity aggregation, household hazardous waste collection, and climate change adaptation can help to promote goals in cost efficient ways.

SEEK FUNDING

Many of the recommended strategies will require additional funding. It is recommended that alternative and additional funding sources be explored, including the American Recovery Plan Act (ARPA) funding and others. Some potential sources are listed in the Implementation Tables whenever possible.

KEY TO THE IMPLEMENTATION PLAN TABLES

The following is a key to the notation used in the Implementation Plan tables. The Implementation Plan is organized around the nine identified goals with accompanying objectives, with separate columns provided for:

- **Strategies** – avenues for achieving the goals and objectives, with cross-referencing to other related strategies through the tables (designated by *SEE ALSO*)
- **Actions** - steps recommended for carrying out the strategies
- **Existing Resources** – a listing of known relevant organizations and/or other resources to support the strategy
- **Funding** – possible sources of funding for the strategy
- **Lead and Partners** – the town departments, boards, committees, or other entities considered most appropriate for taking the lead with the strategy; important entities/individuals to serve as partners in carrying out the strategy and associated action steps
- **Phasing** -
  #1= Immediate (1 to 5 years)
  #2 = Intermediate (5 to 10 years)
  #3 = Future/Re-evaluate in 10 years (10 to 20 years)
  Ongoing (continue and support action already in progress)
  Sustained Effort (initiate new action step and sustain over time)

- **Guiding Principle(s)** – a brief description of how the strategy fulfills the Comprehensive Plan's guiding principle(s)
- **Planning Board Work Plan Item** – where applicable, the item number identified in the Lexington Planning Board's work plan
- **Ripe Apple** – an action step that is considered to be "low-hanging fruit" – relatively low cost, low level of effort, with desirable impact(s). By undertaking these immediately, the town will foster a belief in the planning process, and will provide momentum for implementing other actions identified in the plan. Acting on recommendations quickly and visibly builds credibility for the Comprehensive Plan and also pays tribute to the individuals who committed time and thought to the planning process.

END NOTES. End Notes are provided after each section. These are intended to provide further information than can be given in a footnote.

DRAFT

GOAL 10: To support and advance Goals 1-9 of LexingtonNext through wise Land Use Planning

The Town's ability to meet future needs for public facilities, public safety, emergency response, schools and other vital public needs may require using Town-owned land in news ways, or working to secure strategically located private land in the future. Further, maintaining and improving Lexington's fiscal resilience, economy, housing opportunities, and mobility for current and future residents, employees, customers and visitors over time may depend on future zoning and land use decisions and strategies.

As described in Volume 1 and Volume II the majority of land in Lexington is zoned residential, seven times the amount zoned for commercial. The next largest category of zoned land is government/tax exempt uses, including land owned by the US and municipalities besides Lexington. A few large privately owned, residentially-zoned parcels remain undeveloped. In some cases, today's zoning may allow uses that conflict or prevent the desired future land uses and needs expressed by the public through this Comprehensive Plan process.

Lexington has been fortunate to take advantage of unplanned, unforeseen opportunities to acquire properties to meet community needs. Two examples are the 2014 property purchase from the Scottish Rite Masonic Museum and Library that allowed the Town to relocate and expand the Recreation and Community Programs and Human Services Departments from the former Muzzey School, and the purchase of 173 Bedford Street from Liberty Mutual that provided a solution for temporary swing space for the Fire Department and Police Department during construction of their new facilities. The Town reacted to these two private real estate opportunities, and was lucky they arose when they did. Rather than hoping for luck in the future, and reacting to private market decisions, this chapter of LexingtonNext proposes proactive and strategic planning ahead with a long view to help realize Lexington's goals.

OBJECTIVE					
Strategies	**Potential Actions**	**Existing Resources**	**Funding**	**Lead & Partners**	**Phasing**
10.1. Develop a needs assessment of the Town of Lexington's Land Use needs projected through 2033	Inventory and map Town owned land Project Town Departments' future land needs Identify potential locations that could meet future Town needs Develop and evaluate alternatives; Consider strategies for acquisitions/swaps. Develop proposals for funding critical acquisitions.	Capital Facilities Plan		**LEADS:** Planning Board Land Use, Health & Development Department **PARTNERS:** Facilities Director Town Manager	

				School Superintendent	
10.2. Evaluate large private and public land holdings to consider whether current zoning designations meet both future land use needs and the goals of this Comprehensive Plan.	Compare actual land uses and conditions with the uses prescribed by zoning, and evaluate whether current or new zoning districts and uses conflict with or advance the goals of LexingtonNext; report the results of this evaluation. Consider developing future zoning bylaw amendments to align prescribed uses in zoning with LexingtonNext goals.			**LEADS:** Planning Board Land Use, Health & Development Department **PARTNERS:** Facilities Director	
10.3. Evaluate opportunities for siting Town services and facilities in strategic ways, or in new/different locations, to meet multiple goals in this Comprehensive Plan.	Determine a process for examining alternative locations for important Town facilities that may open up opportunities to meet LexingtonNext transportation, economic vitality, housing, sustainability and other goals. Identify the costs and benefits of these alternatives. Consider partnerships with private landowners.			**LEADS:** Planning Board Land Use, Health & Development Department **PARTNERS:** Facilities Director Town Manager School Superintendent	

DRAFT

INTRODUCTION

Land use refers to the arrangement of residential, commercial, industrial, agricultural, and other activities on the land, as well as the natural landscape of ponds, rivers, streams, wetlands, forests, and grasslands that support them. Of Lexington's 10,676 acres (16.68 square miles), approximately 68% percent has been developed for roads, homes, stores, offices, light manufacturing companies and their associated driveways and parking lots. The remaining land, approximately 3,400 acres, is undeveloped or in a natural state, or serves some type of open space use.

The following chapter provides an inventory of existing land use patterns, together with an overview of Lexington's zoning, as the town's primary tool for regulating development.

EXISTING CONDITIONS

LAND USE CHANGE

Settled in 1642 and incorporated in 1713, Lexington has changed significantly from its earliest days as a farming and logging community. With the 1846 extension of the railroad from Boston to Lexington Center, the town's land uses began to mirror the emerging suburb, complete with two busy commercial centers (Lexington Center and East Lexington). By the late 1800s, the town evolved into a tourist destination and summer resort community. The most significant shift in land use came after the

POTENTIAL SHORT-TERM OR LONG-TERM IMPACTS OF COVID-19

- Many Lexington residents who commuted to jobs in Boston, Cambridge, and along the I-95 corridor before the onset of COVID-19 and were then ordered to work remotely, may continue to do so in the future, perhaps permanently. As a result, more retail and commercial establishments may be in demand to service the work-at-home population, and Lexington's zoning may require amending to accommodate this demand.

SUMMARY OF KEY POINTS

- Lexington has a limited amount of land designated for commercial use; residential use is seven times greater than commercial use.
- The Hartwell Avenue corridor offers opportunity for development of new commercial activity, particularly if future decisions about the use of Hanscom Airforce Base provide for this.
- Lexington has established professional planning capacity through its planning department, which ensures that town boards have timely access to "best practices" and qualified personnel to advise them during the permitting and approval processes.

Figure 1. Lexington Land Use.

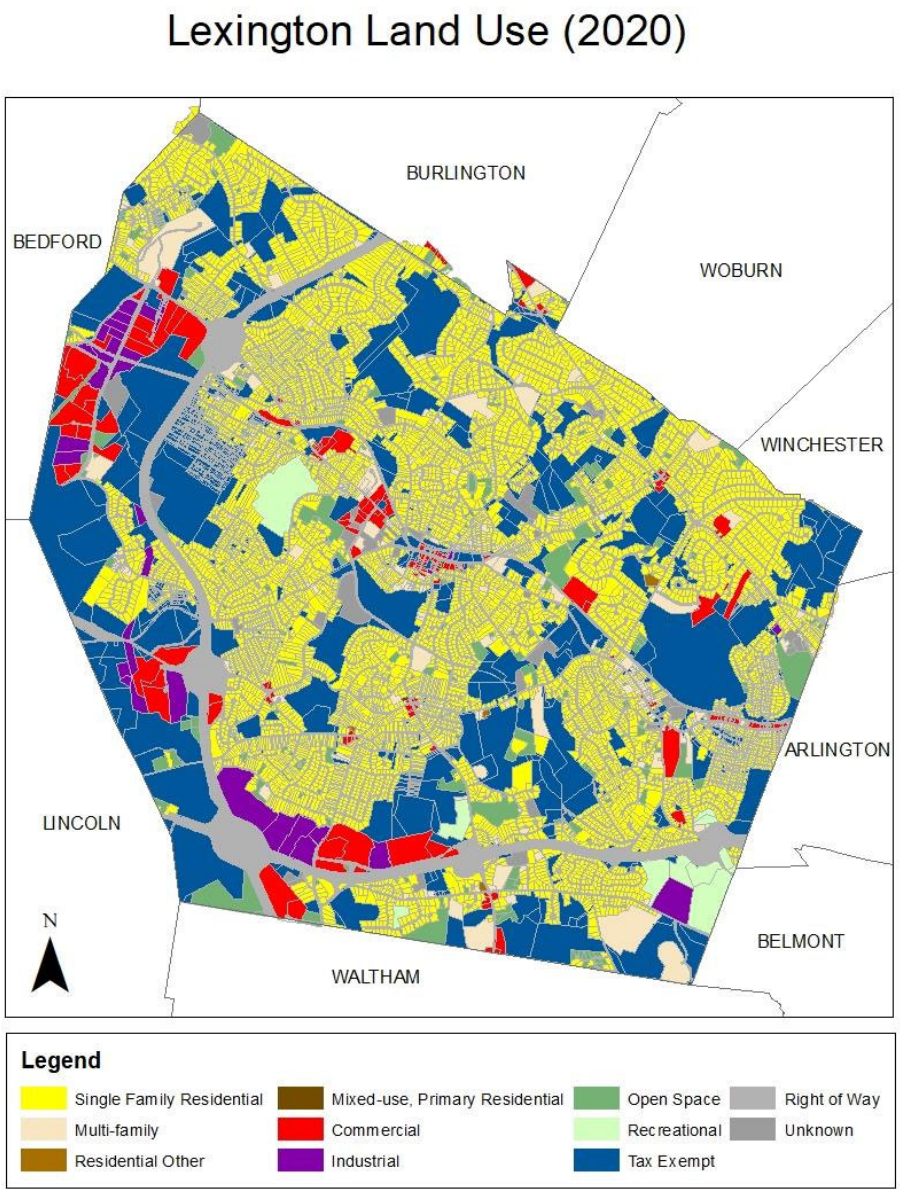

end of World War II, when the population boomed along with expanded residential construction. Over one-third of Lexington's housing stock was constructed between 1950 and 1970.

Since the mid-20th century, land uses have largely remained the same. Most changes have been the result of the town's acquisition of open space lands, or from redevelopment of single-family homes and adoption of planned development districts. Until the mid-1990's development (both commercial and residential), took place predominantly on vacant land. As vacant land became scarcer, development shifted to previously developed land, and today, land is being redeveloped to the greatest extent allowed by Lexington's Zoning Bylaw. Since the completion of the 2002/2003 Comprehensive Plan, single-family residential development has been the predominant land use in Lexington.

CURRENT LAND USE INVENTORY

Lexington's land uses fall into twelve different categories, with the single-family only residential zone accounting for 39.34% of the town, and all residential zones (including Mixed-Use) making up 43.42%. Tax-exempt land accounts for the second largest land use at 3,019 acres or 28.28% of total land.

Table 1. Lexington Land Use.

LEXINGTON LAND USE		
Category	**Acreage**	**% of Total Land**
Residential-Single-Family	4,199.9	39.34
Residential-Multi-Family	427.7	4.01
Residential-Other	6.6	0.06
Mixed-Use-Primarily Residential	1.2	0.01
Commercial	495.0	4.64
Industrial	263.8	2.47
Tax-Exempt	3,019.0	28.28
Open Space	446.1	4.18
Recreation	181.5	1.7
Water	1.4	0.01
Right-of-Way	1,462.8	13.7
Unknown	170.9	1.6
TOTAL	**10,675.9**	**100**

NEIGHBORHOODS

Lexington's many neighborhoods contribute to land use patterns. In recent years, the town has focused on four of the neighborhoods that present the greatest opportunities for commercial and economic activity:

- **East Lexington/Follen Heights.** Located in the southeastern corner of Lexington approximately two

GROWTH OF RESIDENTIAL LAND USE

- Between 1998 and 2017, the town approved 72 definitive subdivision plans, creating 416 new units of housing.
- During this same period, the number of total lots in Lexington increased by 26.7%.
- Between 2010 and 2019, permits for single-family homes ranged from a low of 51 per year (2011) to a high of 103 per year (2015). Over the ten-year period, a total of 821 permits were issued.
- In 2015, of the approximately 600 acres of developable land remaining in Lexington, 90% were zoned for residential use.

miles from the town center, this area includes a small business district, as well as the Arlington Great Meadow, Follen Heights and portions of the Dunback Meadow and Belmont Country Club.

- **Hartwell Avenue/Bedford Street**. Located off I-95, this low-density area contains a group of specialized military research and development companies that provide regional employment. In 2021, Town Meeting voted down a proposal to create the Hartwell Innovation Park, a new zoning district in the area, that would allow for expanded economic development. A more complete description of this new district appears later in this chapter.
- **South Lexington**, abutting both Waltham and Lincoln and transected by I-95 and Route 2, is one of Lexington's economic centers. Through formation of Planned Development Districts, the area incorporates residential and commercial uses, as well as office space. In 2015, a South Lexington Transportation Study assessed existing conditions and outlined steps for transit improvement.
- **Central Business**, Lexington's downtown commercial area, includes the Battle Breen, Cary Memorial Library and Hall, town offices and police station, and a portion of the Minuteman Commuter Bikeway.

EXISTING ZONING

OVERVIEW

Zoning is the primary tool for regulating land use, and Lexington has embraced this tool for nearly 100 years, adopting its first zoning in 1924. A zoning bylaw separates land uses, sets dimensional standards, and establishes use requirements in order to regulate land use. In Lexington, land is regulated by the Zoning Bylaw and Subdivision Regulations, both of which are implemented by the Planning Board, and enforced by the Building Commissioner/Zoning Enforcement Officer and Zoning

Board of Appeals. The following zoning districts have been established in Lexington to regulate land:

- 12 zoning districts
- 5 Planned Development Districts (PD)
- 10 Planned Residential Districts (PR)
- 16 Planned Commercial Districts (PC)
- 2 Neighborhood Conservation Districts (NCD)

RESIDENTIAL DISTRICTS

Land zoned for residential use falls into four separate categories, and covers most of the town:

One-Family Dwelling (RO), 3,596.50 acres, reserved for single-family dwellings, as well as religious, institutional, educational, and agricultural uses, and community facilities. Minimum lot sizes are 30,000 square feet and one unit is allowed per acre.

One-Family Dwelling (RS), 3,105.55 acres, reserved for single-family dwellings, as well as religious, institutional, educational, and agricultural uses, and community facilities. Minimum lot sizes are 15,500 square feet, and up to two units are allowed per acre.

Two-Family Dwelling (RT), 40.94 acres, reserved for single- and two-family dwellings, as well as religious, institutional, educational, and agricultural uses, and community facilities. Minimum lot sizes are 15,500 square feet and 2-4 units are allowed per acre.

The fourth category, **Planned Residential Development**, is described below under "Planned Development Districts."

COMMERCIAL & INDUSTRIAL ZONING DISTRICTS

Lexington has created eight zones for commercial and industrial uses:

Central Business (CB), 15.79 acres, reserved for mixed use development along a commercial corridor, with no minimum lot size requirement.

Local Office (CLO), 18.44 acres, reserved for office and commercial businesses, with a minimum lot size requirement of 30,000 square feet.

Manufacturing (CM), 285.72 acres, reserved for a mixture of commercial, manufacturing and industrial uses with a minimum lot size requirement of 3 acres.

Neighborhood Business (CN), 8.78 acres, allowing single- and two-family residential uses in additional to small commercial and service-oriented uses, with a minimum lot size requirement of 15,500 square feet and limit of 2-4 units per acre.

Figure 2. Lexington Zoning Districts.

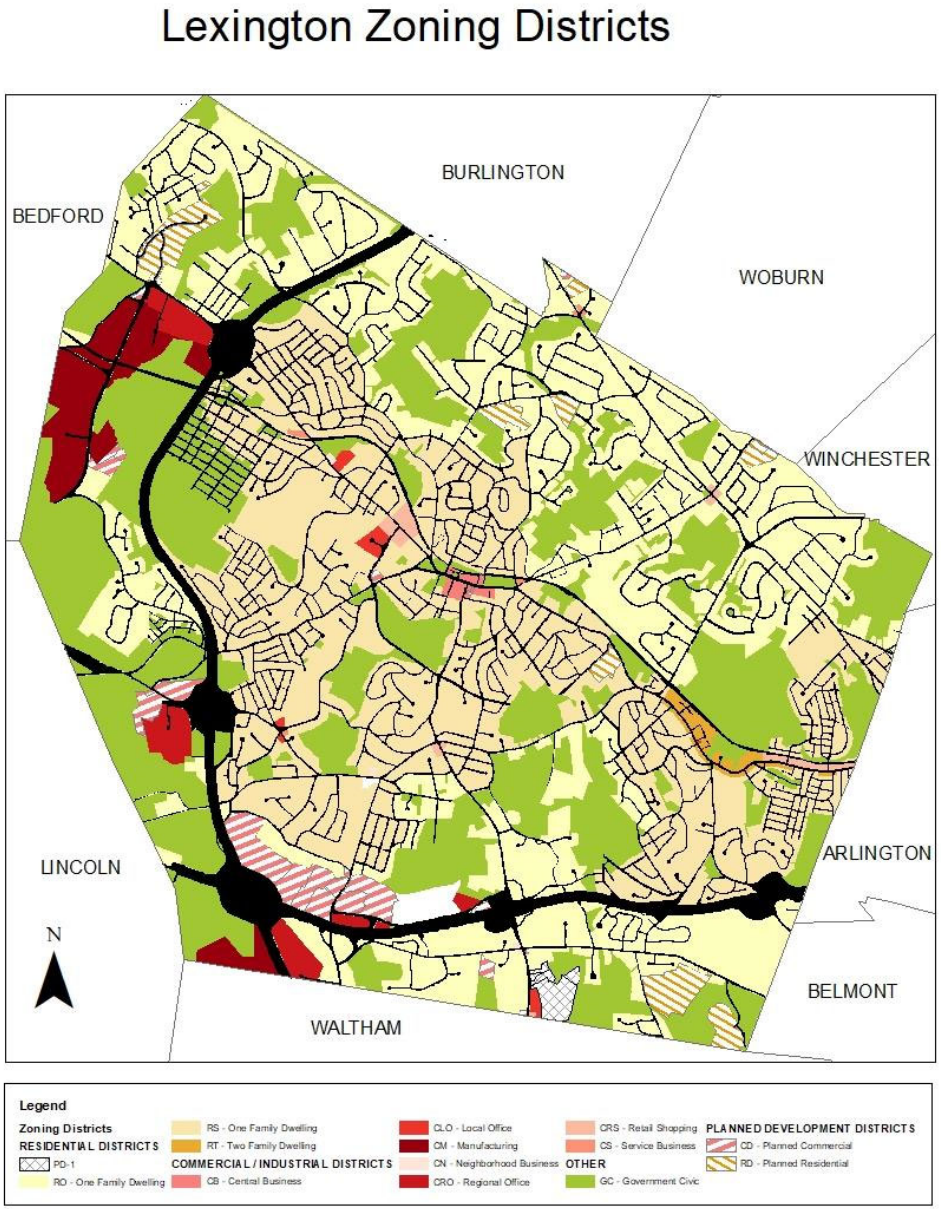

Regional Office (CRO), 90.39 acres, reserved for office and commercial businesses, with a minimum lot size requirement of five acres.

Retail Shopping (CRS), 33.67 acres, allowing commercial uses only on a minimum lot size of 15,500 square feet.

Service Business (CS), 5.15 acres, reserved for service-oriented businesses on a minimum lot size of 20,000 square feet.

Commercial Service Expanded (CSX), 2.24 acres, allowing for a mix of commercial, industrial, and manufacturing uses, on a minimum lot size of 30,000 square feet.

GOVERNMENT CIVIC DISTRICT

Land zoned for **Government Civic** uses **(GC),** 3,014.95 acres, is reserved for land with a particular public nature. Minimum lot size and units per acre do not apply.

PLANNED DEVELOPMENT DISTRICTS

In addition to those outlined above, Lexington has adopted, as part of its zoning bylaw, provisions for creating Planned Districts. Such districts provide more flexibility to developers, as they allow for development that may not otherwise be allowed by zoning. Their intent it to achieve a higher and better form of development that is unique to the parcel and its context by improving the streetscape, adding to the open space and trail system, ensuring safe circulation and providing transportation options. Planned districts must undergo a zoning amendment through the Town Meeting process before development may proceed. To date, Lexington has approved 31 such districts for commercial (PC), residential (PR), and mixed-use (PD) development, covering a total of 430.48 acres.

NEIGHBORHOOD CONSERVATION DISTRICTS

In addition to the residential zoning districts discussed above, Lexington has established two **Neighborhood Conservation Districts (NCD).**[1] The intent of these is to preserve, protect and enhance significant areas of the community by allowing projects within the district to go beyond what the Zoning Bylaw allows. Impact of a proposed development on a district's overall scale, its streetscape, and its existing significant buildings may be considered. Specific regulations differ from neighborhood to neighborhood and are enforced by individual NCD commissions. Lexington's two NCDs are:

- **Pierce-Lockwood**, fifteen homes bounded by Massachusetts Avenue, Tower Park, the Minuteman Bikeway, and Maple Street

[1] Chapter 78 of the Code of Lexington contains the Neighborhood Conservation District enabling legislation.

- **Turning Mill**, 113 parcels along Demar, Dewey, Gould, Grimes, Mountain, Partridge, and Turning Mill Road, as well as Jeffrey Terrace.

OVERLAY DISTRICTS

Lexington has established two overlay districts with the intent of improving residents' safety and increase the overall quality of life. By definition, overlay districts do not supersede other zoning districts, but are superimposed over other zoning districts. Lexington's two overlay districts are:

National Flood Insurance District (NFI), intended to "reduce the threats to life and personal injury; eliminate new hazards to emergency response officials; prevent the occurrence of public emergencies resulting from water quality, contamination, and pollution due to flooding; avoid the loss of utility services which if damaged by flooding would disrupt or shut down the utility network and impact regions of the community beyond the site of flooding; eliminate costs associated with the response and cleanup of flooding conditions, and reduce damage to public and private property resulting from flooding waters."[2]

Transportation Management Overlay District (TMO), intended to allow "effective multi-modal transportation networks that increase the quality of life in Lexington through improved traffic management and mitigation."

[2] Town of Lexington Zoning Bylaw and Development Regulations, adopted March 20, 2013.

OTHER PROVISIONS OF THE ZONING BYLAW

Historic Districts. Lexington maintains four contiguous Historic Districts that follow the spine of Massachusetts Avenue and include a total of 570 historic properties. The districts were established in the 1950s and 1960s under the provisions of M. G. L. Chapter 447, Acts of 1956, "An Act Establishing an Historic Districts Commission for the Town of Lexington and Defining its Powers and Duties and Establishing Historic Districts in the Town of Lexington." For more information about the districts, refer to the Historic and Cultural Resources chapter of this inventory.

ZONING AMENDMENTS SINCE 2003

Amendments to Lexington's Zoning Bylaw are approved by Town Meeting in accordance with M. G. L. Chapter 40A, Section 5. Since 2003, Town Meeting has voted to amend the Zoning Bylaw numerous times, including, in 2013, a recodification of the law itself. Amendments have ranged from minor edits to rezoning of areas within the community. A summary of the major amendments appears below:

- 2004: Avalon Bay re-zoning was approved for former Met State Hospital site 387 units with 25% of units affordable and sixty units age-restricted.

- 2005: Town Meeting approved revised the accessory apartment bylaw, allowing larger units by right and including buildings constructed after 1983 as eligible for accessory units.

- 2005: after a previous unsuccessful attempt, Town Meeting rezoned the former Lexington Battle Green Inn for the Lexington Place Condominiums. The project included three affordable residential units.

- 2008: Town Meeting approved changes to the "cluster" subdivision bylaw.

- 2009: Town Meeting increased the floor-area-ratio.

- 2014 – 2020: Town Meeting voted to amend the zoning bylaw multiple times to modify regulations pertaining to services in storefronts, accessory uses, building heights and dimensions, off-street parking, driveways, signs in commercial districts, Special Permit Residential Developments, Planned Developments and others. Each amendment is identified, along with the corresponding Town Meeting warrant article number, in the Lexington Zoning Bylaw.

In 2021, Town Meeting considered the establishment of a new Planned Development District, the Hartwell Innovation Park, or C-HIP, as a means of increasing economic development opportunities in one of the town's major employment centers. The new district would rejuvenate the area by balancing a by-right permitting process for desired uses and aggressive dimensional standards with strict adherence to sustainable building practices and design guidelines and regulations. By implementing the C-HIP Zoning Bylaw, the Planning Board Regulations, and the C-HIP Design Guidelines, the town aimed to create an attractive, sustainable, and vibrant area. The proposal article was defeated.

TOWN DEPARTMENTS AND BOARDS

LEXINGTON PLANNING DEPARTMENT

The Planning Department is responsible for coordinating all planning and development-related activities of the town including land use and comprehensive planning. Staff serve as liaisons to the Planning Board, Zoning Board of Appeals, and to subcommittees associated with each board.

LEXINGTON PLANNING BOARD

The Planning Board is responsible for the review of residential special permit applications, administering Subdivision Regulations in accordance with the state subdivision control law,

and adopting zoning amendments and rezoning petitions according to the Zoning Bylaw. Subcommittees of the Planning Board include the Comprehensive Plan Advisory Committee, the Neighborhood Conservation District Study Committee and the Residential Policy Committee.

LEXINGTON ZONING BOARD OF APPEALS

Lexington's Zoning Board of Appeals hears and makes decisions regarding administrative appeals, applications for special permits and petitions for variances. Appointed by the Select Board, the ZBA consists of five full members serving five-year terms, and six associate members serving one-year terms.

2003 COMPREHENSIVE PLAN IMPLEMENTATION

The 2003 Comprehensive Plan recommended fourteen actions related to land use, twelve of which were accomplished:

- Establishing a policy that in acting on the description of "surplus" public land, priority should be given to diversity-serving housing and preservation of important open spaces;
- Enhancing existing cluster provisions by allowing for lower density and a by-right cluster option as a true open space residential provision;
- Re-examining impervious surface controls;
- Improving Planned Development Districts through use of performance-based controls;
- Observing residential/non-residential balance;
- Periodically assessing links between land use and the environment;
- Securing funding for open space;
- Strengthening diversity of neighborhood character;
- Avoiding unbroken seas of asphalt by amending current landscaping requirements to preclude large scale parking areas;
- Using town facilities and operations as a demonstration of good resource efficiency and waste-reduction practices;
- Providing incentives for development that has low non-renewable energy demand and other resource-efficient design approaches; and
- Helping "helpful businesses."

Recommendations yet to be implemented include:

- Specifying non-residential benefit expectations by offering developer incentives; and

- Mandating subdivision open space through use of special permits.

ISSUES, CHALLENGES AND OPPORTUNITIES

- Lexington has a limited amount of land designated for commercial use; residential acreage amounts to seven times that of commercial.

- Between 2010 and 2019, permits for single-family homes ranged from a low of 51 per year (2011) to a high of 103 per year (2015). Over the ten-year period, a total of 821 permit were issued.

- Many Lexington residents who commuted to jobs in Boston, Cambridge, and along the I-95 corridor before the onset of COVID-19 may continue to do so in the future, perhaps permanently. As a result, more retail and commercial establishments may be in demand to service the work-at-home population, and Lexington's zoning may require amending to accommodate this demand.

- The Hartwell Avenue corridor offers opportunity for development of new commercial activity, particularly if future decisions about the use of Hanscom Airforce Base provide for this.

- Lexington retains a few open landholdings (25 to 35 acres in size) that are zoned for single-family homes but are currently in other land uses. Under current zoning these landholdings could be converted to market-rate single-family homes by right.

LIST OF RESOURES

Town of Lexington website: www.lexingtonma.gov
Lexington Zoning Bylaw (2013)

INTERVIEWS

Tom Malloy, Lexington Town Manager

Lexington Select Board
- Jill Hai, Chair
- Suzie Barry
- Douglas Lucente
- Joe Pato
- Mark Sandeen

Lexington Planning Board
- Charles Hornig, Chair
- Bob Creech
- Michael Leon
- Robert Peters
- Melanie Thompson

Lexington Zoning Board of Appeals
- Ralph Clifford
- Jennifer Gingras

Lexington Center Committee
- Jerry Michelson
- Casey Hagerty

Caryl Dlugy, East Lexington

AGENDA ITEM SUMMARY

LEXINGTON PLANNING BOARD

AGENDA ITEM TITLE:

1040-1050 Waltham Street – Review Signage Package

PRESENTER:

Applicant: Greatland Realty Partners

ITEM NUMBER:

SUMMARY:

Greatland Realty Partners has submitted a signage package for Revolution Labs at 1040-1050 Waltham Street. Review of the signage plan was a condition (condition #41) of the Planning Board's August 12, 2020 Site Plan Review approval.

The proposed signage complies with the zoning and staff recommends approval.

SUGGESTED MOTION:

FOLLOW-UP:

DATE AND APPROXIMATE TIME ON AGENDA:

8/17/2022

ATTACHMENTS:

Description	Type
Signage Package Submission	Exhibit
Decision	Exhibit
PD Zoning	Exhibit
REVISED Signage Package Submission 08.17.2022	Exhibit

REVOLUTION LABS

SITE SIGNAGE
GARAGE ENTRY SIGNAGE

1050 Waltham Street, Lexington, MA

GREATLAND
REALTY PARTNERS

DESIGN INTENT PACKAGE

08.08.22

omloop
it's all connected

LEXINGTON SIGN BYLAWS

5.2. SIGNS.

5.2.4 General Regulations.
1. Illumination. No sign shall be illuminated between the hours of 11:00 p.m. and 6:00 a.m., except signs on premises open for business, and then only upon issuance of a special permit by the SPGA. Exterior illumination of signs shall be shielded, directed solely at the sign, and be steady and stationary. **No internal illumination of a sign is permitted** except upon issuance of a special permit by the SPGA. The illumination of any sign shall not exceed 150 footlamberts.

5.2.8 Commercial Districts. The provisions of this section shall apply to signs in commercial districts. Accessory signs on business establishments or institutions in commercial districts that comply with the following provisions are permitted:

1. Wall signs.
a. One principal wall sign is permitted on the front of the establishment to which it relates. **The width of such a sign above the first floor of a building shall not exceed three feet.**

b. A secondary wall sign may be installed marking a direct entrance on a parking lot or another street in addition to the front wall sign. There shall be not more than two such secondary wall signs. Said sign shall have a width no greater than 50% of the maximum permissible width for the principal wall sign.

c. No wall sign shall be more than three feet in overall height.

d. In buildings where the first story is substantially above grade and the basement is only partially below street grade, one sign for each level is allowed if each sign has only 1/2 of the area that would be permitted for a single sign.

e. In addition to the above signs, each building with multiple occupants may have one directory sign affixed to the exterior wall, window or door of the building. Such directory sign shall provide not more than one square foot for each occupant of the building.

f. Wall signs shall either be affixed to a wall and parallel to it or affixed to the roof above a wall and be parallel to the wall. They shall not project more than 12 inches from the face of such wall.

g. No wall sign shall project above the highest line of the main roof or parapet on the wall to which it is attached, whichever is higher.

2. Projecting signs.
a. In particular instances the SPGA may issue special permits for projecting signs in accordance with § 5.2.10, if it is determined that the architecture of the building, the location of the building with reference to the street or the nature of the establishment is such that the sign should be permitted in the public interest. No establishment shall be permitted more than one projecting sign.
[Amended 3-23-2016 ATM by Art. 37]

b. Notwithstanding § 5.2.8.2.a, in the CB District, one projecting sign per establishment shall be permitted by right, provided it meets the standards set out below. Projecting signs exceeding these dimensions shall be subject to the special permit provisions of § 5.2.10.

i. The sign may not exceed six square feet in area (not including the area of the supporting bracket or hanger);

ii. For single-story structures, the sign shall not project above the roofline or 18 feet, whichever is lower; for multistory structures projecting signs may not extend vertically above the window sill of the second story;

iii. The sign must clear sidewalks by at least eight feet from the bottom of the sign and may project no more than four feet from a building or one-third the width of the sidewalk, whichever is less;

iv. The sign must clear the wall by at least six inches and must project from the wall at an angle of 90°. Angular projection from the corner of a building is prohibited.

3. Standing signs. In particular instances the SPGA may issue special permits for standing signs in accordance with § 5.2.10, if it is determined that the architecture of the building, the location of the building with reference to the street or the nature of the establishment is such that the sign should be permitted in the public interest.

No establishment shall be permitted more than one standing sign other than signs directing traffic flow.

In the CM and CRO Districts one standing sign, not to exceed 50 square feet in area and five feet in height, shall be permitted by right on each lot.

[Amended 3-23-2016 ATM by Art. 37; 4-24-2017 ATM by Art. 43]

https://www.lexingtonma.gov/zoning
04.11.22

omloop
it's all connected

21 Bantry Road
Framingham, MA 01701
508.733.6440

omloopdesign.com

DATE

08.08.22

These drawings are intended to convey design-intent only. They are not for construction. The sign contractor, not the designer, is responsible for the final detailing, structural engineering, fabrication, and installation of the signs. This office shall review contractor's shop drawings and details prior to fabrication solely for conformance with the design intent documents. The sign contractor shall verify in the field all dimensions at the proposed sign locations prior to performing the work, and inform the owner and designer of any conflicts, as-built changes, or additional coordination required from other parties.

PROJECT NAME

REVOLUTION LABS
CORE AND SHELL
1050 WALTHAM ST.
LEXINGTON, MA

PROJECT #

DRAWN BY

BP/TJGP

SHEET TITLE

Design Intent Drawings
Pricing Set

SHEET NUMBER

LEXINGTON ZONING MAP
1050 Waltham Street, Lexington, MA

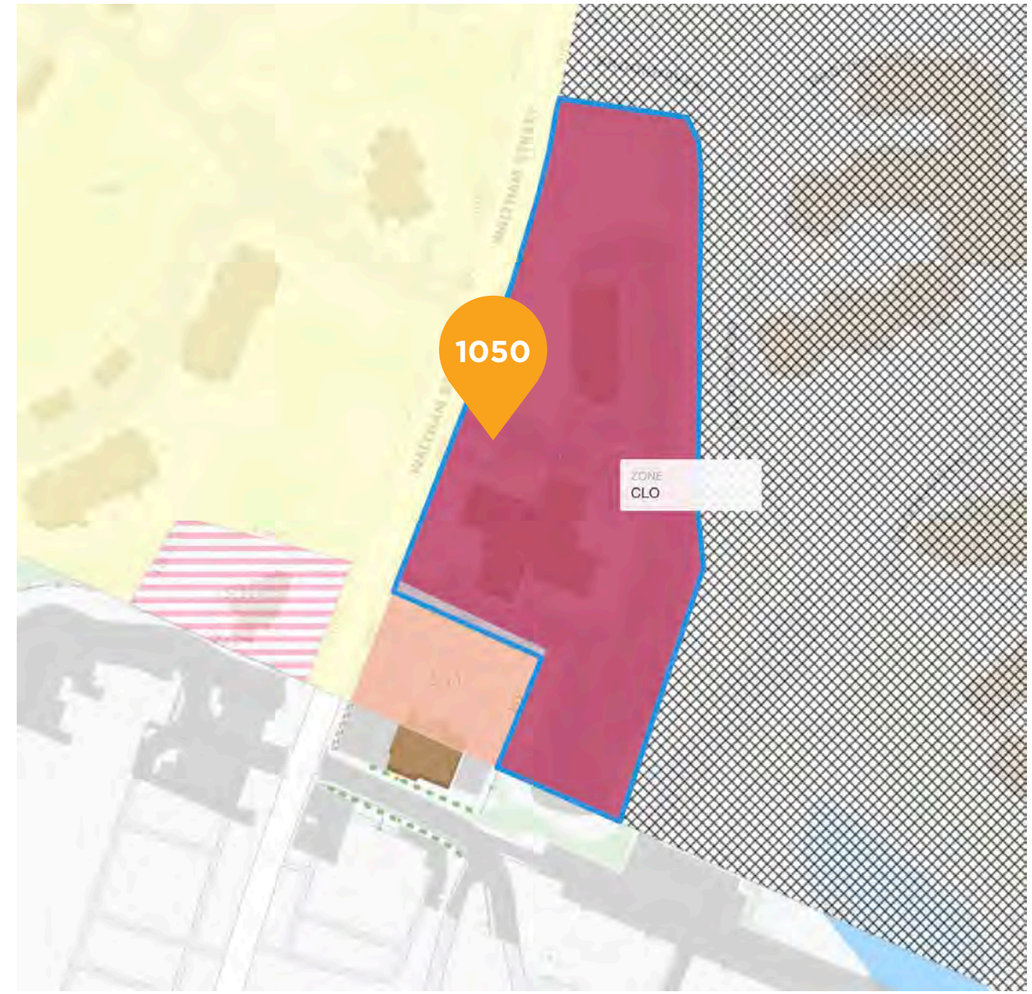

COMMERICAL / INDUSTRIAL DISTRICT
CLO: Local Office

https://www.lexingtonma.gov/zoning
04.11.22

omloop
it's all connected

21 Bantry Road
Framingham, MA 01701
508.733.6440

omloopdesign.com

DATE

08.08.22

These drawings are intended to convey design-intent only. They are not for construction. The sign contractor, not the designer, is responsible for the final detailing, structural engineering, fabrication, and installation of the signs. This office shall review contractor's shop drawings and details prior to fabrication solely for conformance with the design intent documents. The sign contractor shall verify in the field all dimensions at the proposed sign locations prior to performing the work, and inform the owner and designer of any conflicts, as-built changes, or additional coordination required from other parties.

PROJECT NAME

REVOLUTION LABS
CORE AND SHELL
1050 WALTHAM ST.
LEXINGTON, MA

PROJECT #

DRAWN BY

BP/TJGP

SHEET TITLE

Design Intent Drawings
Pricing Set

SHEET NUMBER

Primary brand colors

PMS 2181c

PMS 313c

Secondary brand colors

PMS 8222c

PMS CG10c

White
MP32071
White Wonder

PMS Black C

Tertiary brand colors (garage levels)

Color 1

Color 2

Color 3

Color 4

PMS Cool Gray 1C

PMS 186c

3M™ Scotchcal Red 263

Other project finishes

PMS 2182c

MP 41342SP Brushed Aluminum

Matte White 3M™ Scotchcal Matte White 20

Reflective Yellow 3M™ Scotchlite 680-71

Reflective White 3M™ Scotchlite 680-10

Project Icons

Parking & Regulatory symbols

Raised Characters:
Akzidenz-Grotesk BQ Cond. Reg

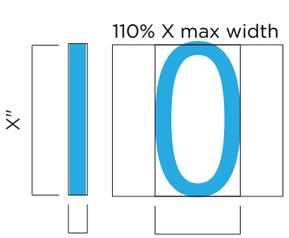

<15% X max. >55% X min.

Visual Characters:
Akzidenz-Grotesk BQ Regular

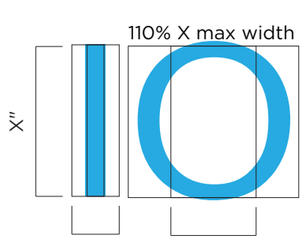

<30% X max. >55% X min.

Visual Characters:
Akzidenz-Grotesk
Bold Condensed

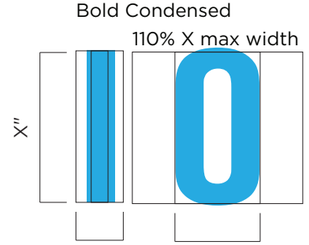

<30% X max. >55% X min.

Logomarks

REVOLUTIONLABS

Typography - Primary Font

ABCDEFGHIJKLMNOPQRSTUVWXYZ
ABCDEFGHIJKLMNOPQURSTUVWXYZ
0123456789:;.,@*“”()!?

Akzidenz-Grotesk BQ Light Small Caps

Typography - Secondary Fonts (Akzidenz-Grotesk BQ Full Family is acceptable for use)

ABCDEFGHIJKLMNOPQRSTUVWXYZ
abcdefghijklmnopqurstuvwxyz
0123456789:;.,@*“”()!?

Akzidenz-Grotesk BQ Condensed Regular

ABCDEFGHIJKLMNOPQRSTUVWXYZ
abcdefghijklmnopqurstuvwxyz
0123456789:;.,@*“”()!?

Akzidenz-Grotesk BQ Regular

ABCDEFGHIJKLMNOPQRSTUVWXYZ
abcdefghijklmnopqurstuvwxyz
0123456789:;.,@*“”()!?

Akzidenz-Grotesk BQ Bold Condensed

ABCDEFGHIJKLMNOPQRSTUVWXYZ
abcdefghijklmnopqurstuvwxyz
0123456789:;.,@*“”()!?

Akzidenz-Grotesk BQ Extra Bold Condensed

Font sources (from branding firm)
Here is a link where Akzidenz-Grotesk BQ Light Small can be found for download.
https://www.download-fonts-free.com/download/71492/akzidenz-grotesk+bq+light+small+caps++oldstyle+figures
Akzidenz-Grotesk BQ Full family with all variations on this font can be downloaded
https://www.download-fonts-free.com/search?sq=akzidenz-grotesk+BQ+#google_vignette

omloop
it's all connected

21 Bantry Road
Framingham, MA 01701
508.733.6440

omloopdesign.com

DATE

08.08.22

These drawings are intended to convey design-intent only. They are not for construction. The sign contractor, not the designer, is responsible for the final detailing, structural engineering, fabrication, and installation of the signs. This office shall review contractor's shop drawings and details prior to fabrication solely for conformance with the design intent documents. The sign contractor shall verify in the field all dimensions at the proposed sign locations prior to performing the work, and inform the owner and designer of any conflicts, as-built changes, or additional coordination required from other parties.

PROJECT NAME

REVOLUTION LABS
CORE AND SHELL
1050 WALTHAM ST.
LEXINGTON, MA

PROJECT #

DRAWN BY

BP/TJGP

SHEET TITLE

Design Intent Drawings
Pricing Set

SHEET NUMBER

SITE SIGNAGE

Wayfinding & Signage

- Visitors
- Delivery & Service
- Pedestrian Paths
- A B Sign Locations
- Visitor Parking
- Visitor Entry

SCALE 1" = 60'

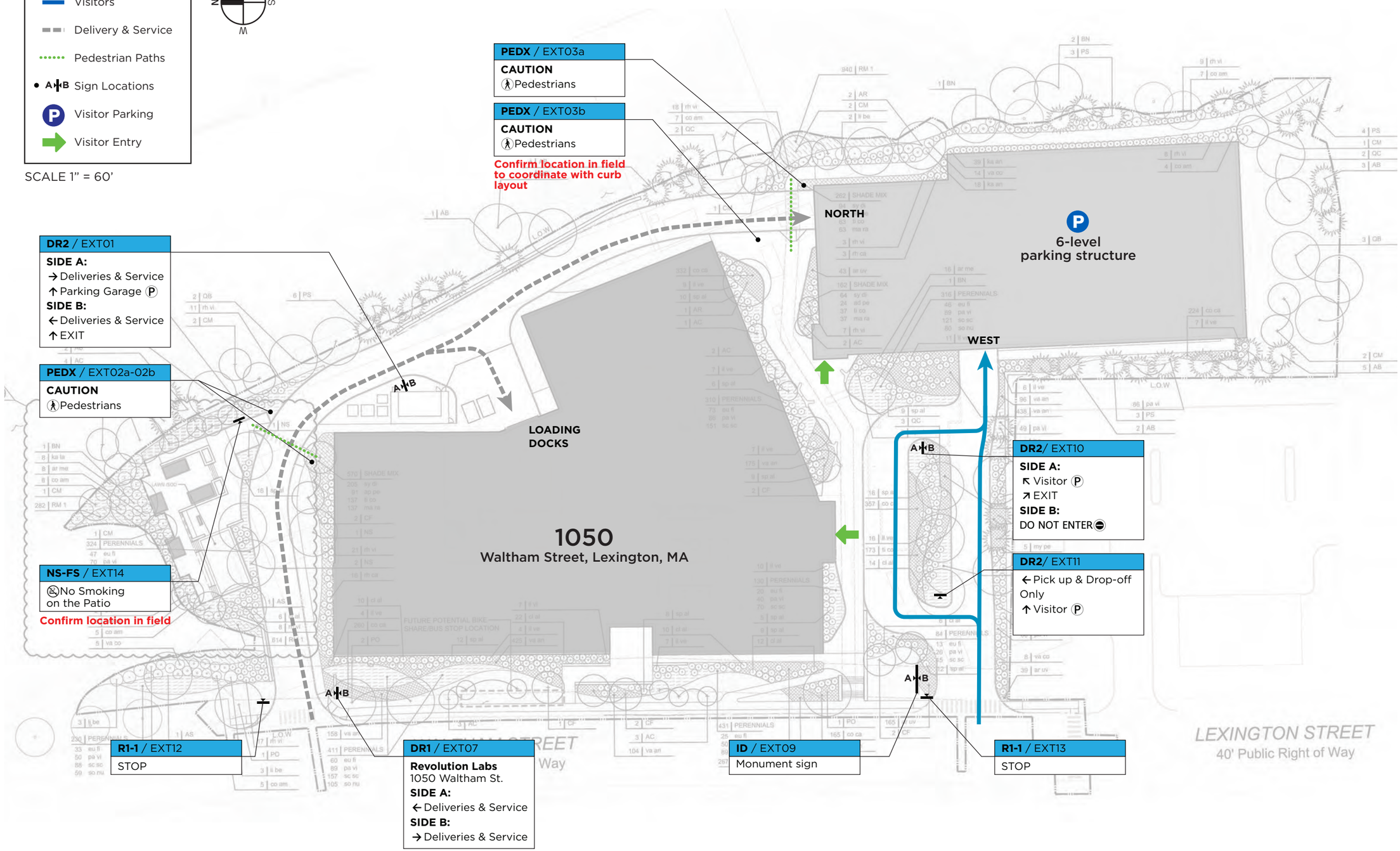

omloop
it's all connected

21 Bantry Road
Framingham, MA 01701
508.733.6440

omloopdesign.com

DATE

08.08.22

These drawings are intended to convey design-intent only. They are not for construction. The sign contractor, not the designer, is responsible for the final detailing, structural engineering, fabrication, and installation of the signs. This office shall review contractor's shop drawings and details prior to fabrication solely for conformance with the design intent documents. The sign contractor shall verify in the field all dimensions at the proposed sign locations prior to performing the work, and inform the owner and designer of any conflicts, as-built changes, or additional coordination required from other parties.

PROJECT NAME

REVOLUTION LABS
CORE AND SHELL
1050 WALTHAM ST.
LEXINGTON, MA

PROJECT #

DRAWN BY

BP/TJGP

SHEET TITLE

Design Intent Drawings
Pricing Set

SHEET NUMBER

SITE SIGN LOCATION PLAN GS.8

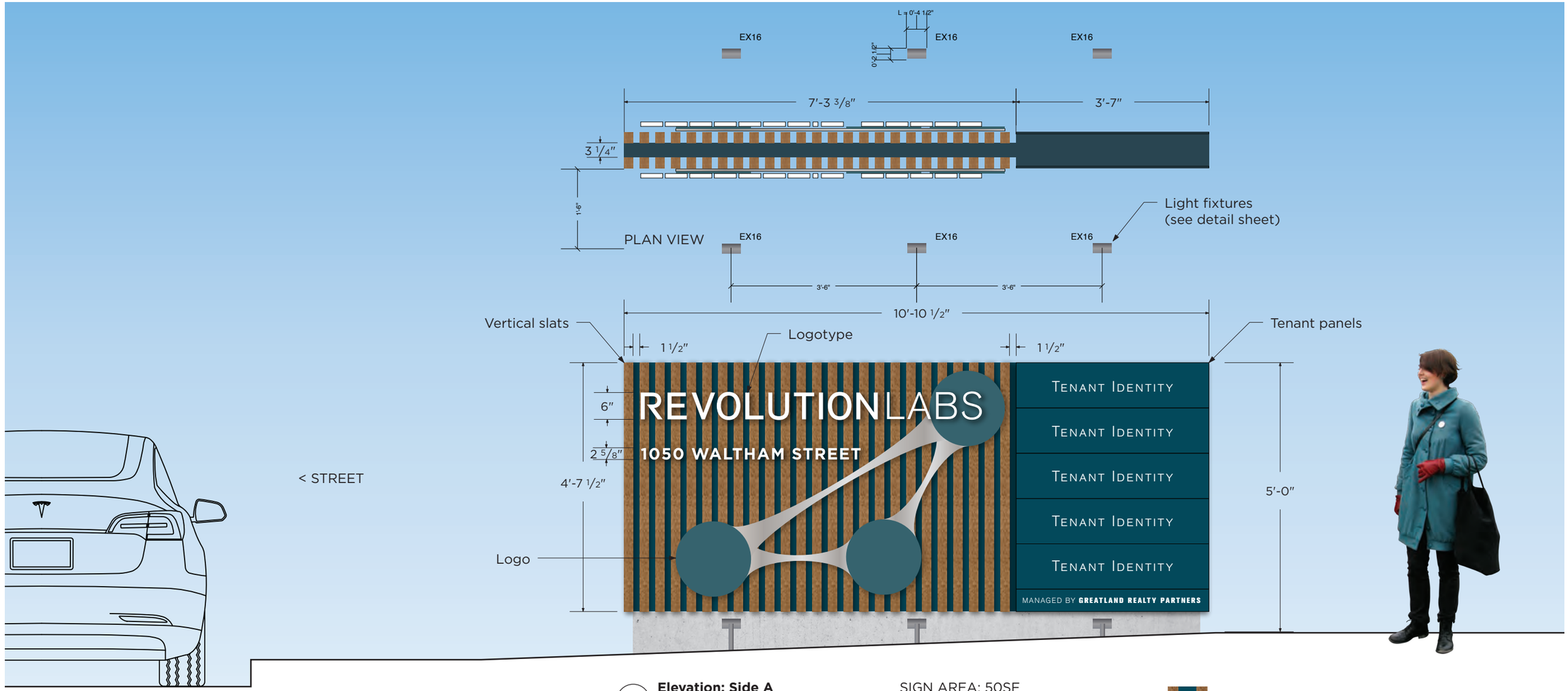

1 **Elevation: Side A**

Scale: 1/2"= 1'-0"

SIGN AREA: 50SF

Fabrication details:
Cabinet: internally framed, aluminum cladding
Vertical slats: BN Fortina™, 50mmx60mm
Tenant panels: flush-fitting aluminum panels, magnetic attachment, set into registered recessess
Logotype: 1" deep, painted, blind studs, 1" spacers
Address: 1/2" thick, painted, blind studs, flush mounted
Logo back layer: 1/2" thick, mounted flush
Logo front layer (circles): 1/2" thick, mounted flush to logo back layer

Type specifications:
Akzidenz Grotesk BQ (artwork as paths provided)

Color specifications:
Vertical slats: BN Fortina™ TA-647 Earl Walnut
Background, tenant panels: PMS 2182C
Logotype: MP32071 White Wonder
Address: MP32071 White Wonder
Logo back layer: MP 41342SP Brushed Aluminum
Logo front layer: PMS 2181C

Mounting method and location:
Exposed concrete base as shown, footing by GC
SIgn contractor to coordinate with GC

Special notes:
Lighting and electical work by GC
SIgn contractor to coordinate with GC

PMS 2181c

MP 41342SP
Br. Alum.

PMS 2182c

BN Fortina™
TA-647
Earl Walnut

White

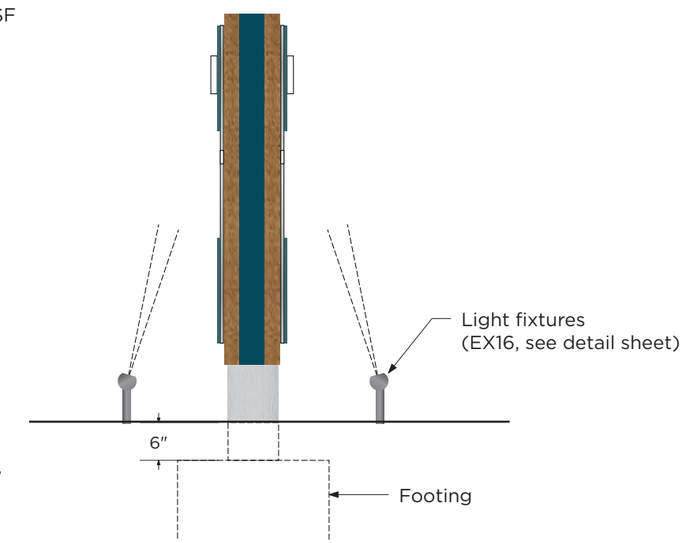

SIDE VIEW

ID MONUMENT SIGN GS.9

omloop
it's all connected

21 Bantry Road
Framingham, MA 01701
508.733.6440

omloopdesign.com

DATE

08.08.22

These drawings are intended to convey design-intent only. They are not for construction. The sign contractor, not the designer, is responsible for the final detailing, structural engineering, fabrication, and installation of the signs. This office shall review contractor's shop drawings and details prior to fabrication solely for conformance with the design intent documents. The sign contractor shall verify in the field all dimensions at the proposed sign locations prior to performing the work, and inform the owner and designer of any conflicts, as-built changes, or additional coordination required from other parties.

PROJECT NAME

REVOLUTION LABS
CORE AND SHELL
1050 WALTHAM ST.
LEXINGTON, MA

PROJECT #

DRAWN BY

BP/TJGP

SHEET TITLE

Design Intent Drawings
Pricing Set

SHEET NUMBER

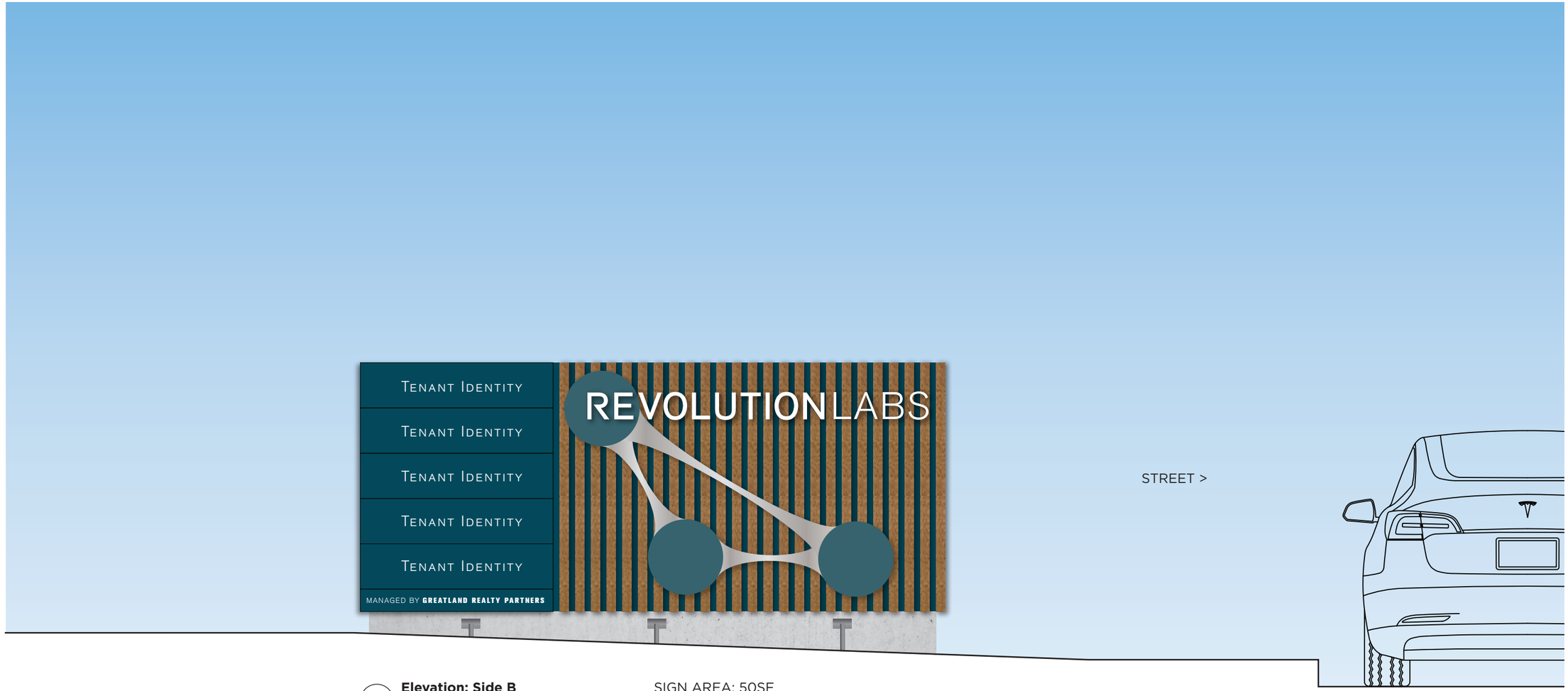

1 **Elevation: Side B**

Scale: 1/2"= 1'-0"

SIGN AREA: 50SF

omloop
it's all connected

21 Bantry Road
Framingham, MA 01701
508.733.6440

omloopdesign.com

DATE

08.08.22

These drawings are intended to convey design-intent only. They are not for construction. The sign contractor, not the designer, is responsible for the final detailing, structural engineering, fabrication, and installation of the signs. This office shall review contractor's shop drawings and details prior to fabrication solely for conformance with the design intent documents. The sign contractor shall verify in the field all dimensions at the proposed sign locations prior to performing the work, and inform the owner and designer of any conflicts, as-built changes, or additional coordination required from other parties.

PROJECT NAME

REVOLUTION LABS
CORE AND SHELL
1050 WALTHAM ST.
LEXINGTON, MA

PROJECT #

DRAWN BY

BP/TJGP

SHEET TITLE

Design Intent Drawings
Pricing Set

SHEET NUMBER

ID MONUMENT SIGN GS.10

BN

Solutions Products

Home / Products

Fortina

Wooden louvers and slats have been and always will be a treasured design element for interior designers and architects, for a variety of reasons. Their material brings color, warmth, and texture into spaces that are visually ho-hum. Their applications are numerous: façade decoration, sunscreens, blinds, ceilings, installation art.

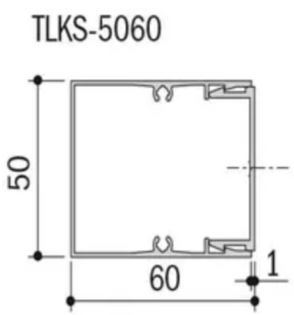

Backrail CLKU-50

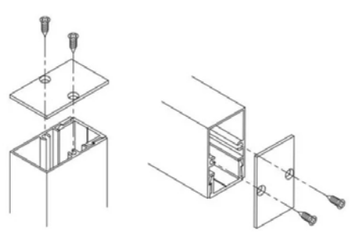

Direct Screw-On End Cap

Exterior Finishes

PORCELAIN TILE WALL SYSTEM
Porcelanosa;
Montreal Nogal.

omloop
it's all connected

21 Bantry Road
Framingham, MA 01701
508.733.6440

omloopdesign.com

DATE

08.08.22

These drawings are intended to convey design-intent only. They are not for construction. The sign contractor, not the designer, is responsible for the final detailing, structural engineering, fabrication, and installation of the signs. This office shall review contractor's shop drawings and details prior to fabrication solely for conformance with the design intent documents. The sign contractor shall verify in the field all dimensions at the proposed sign locations prior to performing the work, and inform the owner and designer of any conflicts, as-built changes, or additional coordination required from other parties.

PROJECT NAME

REVOLUTION LABS
CORE AND SHELL
1050 WALTHAM ST.
LEXINGTON, MA

PROJECT #

DRAWN BY

BP/TJGP

SHEET TITLE

Design Intent Drawings
Pricing Set

SHEET NUMBER

ID MONUMENT SIGN / SLAT DETAILS GS.11

TYPE	APPLICATION IMAGE	LOCATION	DESCRIPTION	LAMPS/SOURCE	POWER SUPPLY/ DRIVER	INPUT WATTS	INPUT WATT UNITS	LISTING	MANUFACTURER	NOTES
										1. Fixture shall dim. system.
EX16		SIGNAGE	Adjustable 4-1/2" long x 2-5/8" diameter LED floodlight, copper-free aluminum body, silicone 'O' ring for water-tight seal, 180° vertical adjustment knuckle, biaxial 360° horizontal rotation, shock resistant tempered glass lens, polyester powder coating, soft focus lens, honeycomb baffle, cutoff visor, wall washer optics, and ingrade HP2 mounting system, IP66 rated.	LED 3000K 80+ CRI L70 @ 50,000 Hours 485 Lumens	Remote Driver (Integral to Ingrade Housing HP2) DIM 0-10V	10.0W	EA	UL Listed for Wet Locations	BK LIGHTING Saratoga LED + HP2 Driver Housing #SA-LED-x53-WW-FINISH-13-CV-360SL (Fixture) + HP2-010-FINISH-MT-GM-R (Integral Driver Mounting)	1. Fixture shall dim. 2. Fixture shall be U.L. listed and labeled "suitable for wet locations". 3. Contractor shall verify and coordinate fixture installation, mounting, and conduit entry, housing type, and field conditions with landscape architect.

SARATOGA - HP2 INTEGRAL DRIVER HOUSING (10W)

ORDER FIXTURE SEPARATELY.

DATE: | PROJECT: | TYPE:

CATALOG NUMBER LOGIC:

**120V only.*

CATALOG NUMBER LOGIC
Example: HP2 - 010 - BZW - MT - GM-R
MATERIAL
Aluminum
SERIES
HP2 - Integral In-grade (Flush)
CONTROL TYPE
ELV - Dimming Driver (For use with Electronic Low Voltage Dimmer)*
INC - Dimming Driver (For use with Incandescent Dimmer)*
010 - 0-10V Dimming Driver (Dimming 1 - 100%)
FINISH
Standard Finishes (BZP, BZW, BLP, BLW, WHP, WHW, SAP, VER)
Premium Finish (ABP, AMG, AQW, BCM, BGE, BPP, CAP, CMG, CRI, CRM, HUG, MDS, NBP, OCP, RMG, SDS, SMG, TXF, WCP, WIR)
(Also available in RAL Finishes. See submittal SUB-1439-00)
INPUT VOLTAGE
MT - 120-277 VAC
OPTIONS
GM-R - Round Grout Mask
GM-S - Square Grout Mask

B-K LIGHTING | MADE IN THE USA | 559.438.5800 | INFO@BKLIGHTING.COM | BKLIGHTING.COM

THIS DOCUMENT CONTAINS PROPRIETARY INFORMATION OF B-K LIGHTING, INC. AND ITS RECEIPT OR POSSESSION DOES NOT CONVEY ANY RIGHTS TO REPRODUCE, DISCLOSE ITS CONTENTS, OR TO MANUFACTURE, USE OR SELL ANYTHING IT MAY DESCRIBE. REPRODUCTION, DISCLOSURE OR USE WITHOUT SPECIFIC WRITTEN AUTHORIZATION OF B-K LIGHTING, INC. IS STRICTLY FORBIDDEN. 09/14/2021 SKU-1314

SARATOGA - HP2 INTEGRAL DRIVER HOUSING (10W)

ORDER FIXTURE SEPARATELY.

DATE: | PROJECT: | TYPE:

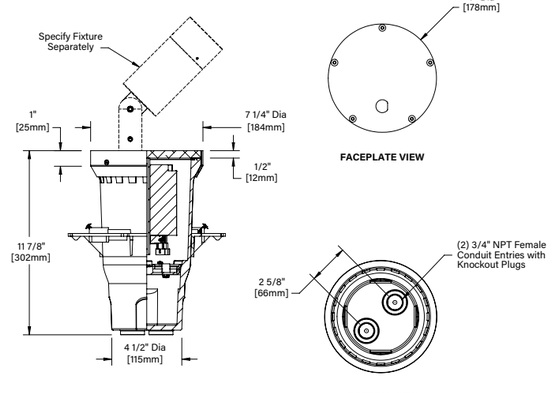

STANDARD FINISHES

Satin Black (BLP), Satin Bronze (BZP), Satin White (WHP), Satin Aluminum (SAP), Black Wrinkle (BLW), Bronze Wrinkle (BZW), White Wrinkle (WHW), Verde (VER)

Click Here to view larger, full-color swatches of all available finishes on our website.

PREMIUM FINISHES

Cascade Mtn. Granite (CMG), Rocky Mtn. Granite (RMG), Sierra Mtn Granite (SMG), Aleutian Mtn Granite (AMG), Textured Forest (TXF), Black Chrome (BCM), Beige (BGE), Weathered Copper (WCP), Old Copper (OCP), Hunter Green (HUG), Cracked Ice (CRI), Mojave Desert Sandstone (MDS), Antique Brass Powder (ABP), Brown Patina Powder (BPP), Sonoran Desert Sandstone (SDS), Weathered Iron (WIR), Clear Anodized Powder (CAP), Cream (CRM), Antique White (AQW), Natural Brass Powder (NBP)

B-K LIGHTING | MADE IN THE USA | 559.438.5800 | INFO@BKLIGHTING.COM | BKLIGHTING.COM

THIS DOCUMENT CONTAINS PROPRIETARY INFORMATION OF B-K LIGHTING, INC. AND ITS RECEIPT OR POSSESSION DOES NOT CONVEY ANY RIGHTS TO REPRODUCE, DISCLOSE ITS CONTENTS, OR TO MANUFACTURE, USE OR SELL ANYTHING IT MAY DESCRIBE. REPRODUCTION, DISCLOSURE OR USE WITHOUT SPECIFIC WRITTEN AUTHORIZATION OF B-K LIGHTING, INC. IS STRICTLY FORBIDDEN. 09/14/2021 SKU-1314

SARATOGA - HP2 INTEGRAL DRIVER HOUSING (10W)

ORDER FIXTURE SEPARATELY.

DATE: | PROJECT: | TYPE:

Accessories *(Configure separately)*

SPECIFICATIONS

Electrical	WIRING / CONNECTORS	XLPE coated wire, (3)18 gauge and [(2)22 gauge- only included with 0-10V Dimming applications]. 300V, 125°C rated and certified to UL3265 standard. Features gear tray quick disconnects. Patented HydroLock® with three (3) Water-Tight connectors supplied for incoming connection. Maximum (2) #10 & (1) #18. Minimum (1) #12 & (1) #18.
	DRIVER ASSEMBLY	One (1) 350mA, Class A, constant current driver. 120-277VAC (nominal) primary input voltage. 50/60Hz. >0.90 Power Factor, 0.25A input current., 20%THD (nominal at 120VAC full load). Output overvoltage, over-current, and short circuit protection with auto recovery. Incandescent Control Option Driver: Dimming driver for use with standard incandescent dimmers at 120VAC(10-100% range). ELV/0-10 Control Option Driver: Dimming driver for use with standard electronic low voltage (120VAC only - 10-100% dim. range)/0-10V dimmers (1-100% dim. range).
PHYSICAL	MATERIALS	Furnished in copper-free aluminum (6061-T6), brass (360), or stainless steel (304).
	FACEPLATE	Solid, 1/2" machined 6061-T6 copper-free aluminum with five (5) black oxide, captive, stainless steel mounting screws.
	HOUSING	Corrosion-free, high strength, flame retardant and UV stabilized, injected molded polycarbonate. Two (2) bottom-entry, 3/4" NPT female conduit entries with knockout plugs and four (4) side flats for 1/2" or 3/4" conduit adapters.
	PATENTED STABILITY FLANGE	Corrosion-free composite flange projects into installation substrate to reinforce housing stability. Integral REBAR saddles simplify installation into concrete form. Four (4) orthogonal bosses permit use of 1/2" PCV conduit or EMT to simplify vertical position and leveling of housing. Preset self-tapping screws anchor housing at proper elevation.
	INSTALLATION	Integral, copper-free aluminum concrete pour collar (CPC), furnished in black finish, permits for direct burial in soil or concrete. Consult Drainage Installation Guide for In-Grade Fixtures (DIG-IT) for compliance with proper soil preparation and drainage requirements prior to installation.
	WATER MANAGEMENT	High temperature silicone 'O' Ring at faceplate. HydroLock® technology provides fail-safe water barrier between junction box and interior components. IP68 rated.
	FINISH	StarGuard, our 15-stage, chromate-free process cleans and conversion coats aluminum components prior to application of Class 'A' TGIC polyester powder coating and is RoHS compliant. Finish to match fixture (specified separately).
	WARRANTY	5-year limited warranty.
	CERTIFICATION & LISTING	Certified to CAN/CSA/ANSI Standards. UL Listed. IP-68 Rated enclsosure. RoHS compliant. Made in the USA with sustainable processes.

c UL us LISTED
RoHS
MADE IN THE USA

B-K LIGHTING | MADE IN THE USA | 559.438.5800 | INFO@BKLIGHTING.COM | BKLIGHTING.COM

THIS DOCUMENT CONTAINS PROPRIETARY INFORMATION OF B-K LIGHTING, INC. AND ITS RECEIPT OR POSSESSION DOES NOT CONVEY ANY RIGHTS TO REPRODUCE, DISCLOSE ITS CONTENTS, OR TO MANUFACTURE, USE OR SELL ANYTHING IT MAY DESCRIBE. REPRODUCTION, DISCLOSURE OR USE WITHOUT SPECIFIC WRITTEN AUTHORIZATION OF B-K LIGHTING, INC. IS STRICTLY FORBIDDEN. 09/14/2021 SKU-1314

Using 6 of them (3 on each side of the signage) we obtain the light levels required.

Regarding the LEED light pollution reduction credit, be aware that the light emitted by this fixture will be 100% above horizontal. We are pretty comfortable saying that we should still respect the "Maximum allowed percentage of total luminaire lumens emitted above horizontal.

Table 2. Maximum percentage of total lumens emitted above horizontal, by lighting zone

MLO lighting zone	Maximum allowed percentage of total luminaire lumens emitted above horizontal
LZ0	0%
LZ1	0%
LZ2	1.5%
LZ3	3%
LZ4	6%

omloop
it's all connected

21 Bantry Road
Framingham, MA 01701
508.733.6440

omloopdesign.com

DATE

08.08.22

These drawings are intended to convey design-intent only. They are not for construction. The sign contractor, not the designer, is responsible for the final detailing, structural engineering, fabrication, and installation of the signs. This office shall review contractor's shop drawings and details prior to fabrication solely for conformance with the design intent documents. The sign contractor shall verify in the field all dimensions at the proposed sign locations prior to performing the work, and inform the owner and designer of any conflicts, as-built changes, or additional coordination required from other parties.

PROJECT NAME

REVOLUTION LABS
CORE AND SHELL
1050 WALTHAM ST.
LEXINGTON, MA

PROJECT #

DRAWN BY

BP/TJGP

SHEET TITLE

Design Intent Drawings
Pricing Set

SHEET NUMBER

ID MONUMENT SIGN / PROPOSED LIGHT FIXTURE GS.12

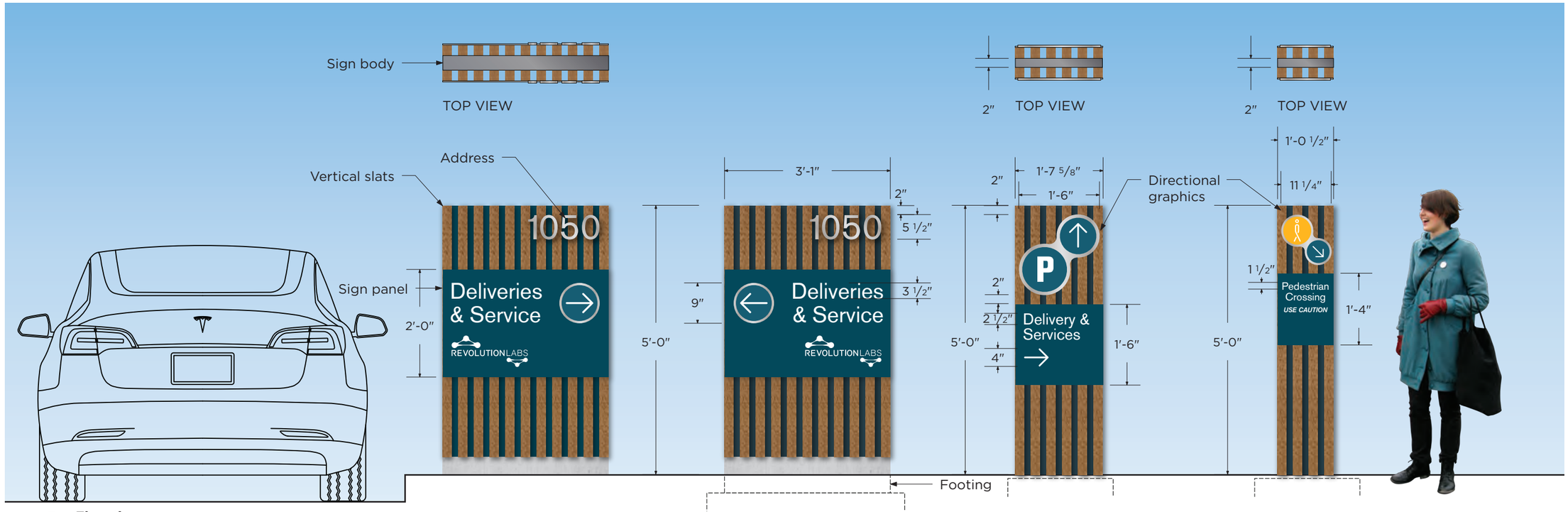

1 **Elevation**
Scale: 1/2”= 1′-0”

DR1 Directional
Side A
Sign Area: 15.4 SF

DR1 Directional
Side B

DR2 Directional
Side A
Sign Area: 8SF

PEDX Ped Crossing
Side A
Sign Area: 5.2SF

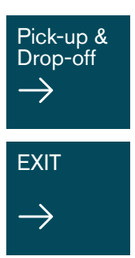

DR2
Panel Layouts

Fabrication details:
Sign body: internally framed, aluminum cladding
Vertical slats: BN Fortina™, 50mmx60mm
Sign panels: 1/4” aluminum panels, painted flush-mounted
Sign panel graphics: reflective vinyl
Address: 1/2” thick, painted, blind studs, flush mounted
Directional graphics: back layer: 1/2” thick, mounted flush
front layer (circles & graphics) applied vinyl flush to logo back layer

Type specifications:
Akzidenz Grotesk BQ Regular

Color specifications:
Vertical slats: BN Fortina™ TA-647 Earl Walnut
Sign panels: PMS 2182c
Address: MP 41342SP Brushed Aluminum
Logo back layer: MP 41342SP Brushed Aluminum
Logo front layer: PMS 2181c
Copy and arrows: Reflective White 3M™ 680-10
Ped disk: Reflective Yellow 3M™ 680-71

Mounting method and location:
Exposed and flush concrete bases as shown, footins by GC
SIgn contractor to coordinate with GC

Special notes:
Non-illuminated signs

PMS 2181c
Br. Aluminum MP 41342SP
Refl. Yellow Scotchlite 680-71
Refl. White Scotchlite 680-10
PMS 2182c
BN Fortina™ TA-647 Earl Walnut
Matte White Scotchcal MW 20

omloop
it's all connected

21 Bantry Road
Framingham, MA 01701
508.733.6440

omloopdesign.com

DATE
08.08.22

These drawings are intended to convey design-intent only. They are not for construction. The sign contractor, not the designer, is responsible for the final detailing, structural engineering, fabrication, and installation of the signs. This office shall review contractor’s shop drawings and details prior to fabrication solely for conformance with the design intent documents. The sign contractor shall verify in the field all dimensions at the proposed sign locations prior to performing the work, and inform the owner and designer of any conflicts, as-built changes, or additional coordination required from other parties.

PROJECT NAME

REVOLUTION LABS
CORE AND SHELL
1050 WALTHAM ST.
LEXINGTON, MA

PROJECT #

DRAWN BY
BP/TJGP

SHEET TITLE
Design Intent Drawings
Pricing Set

SHEET NUMBER

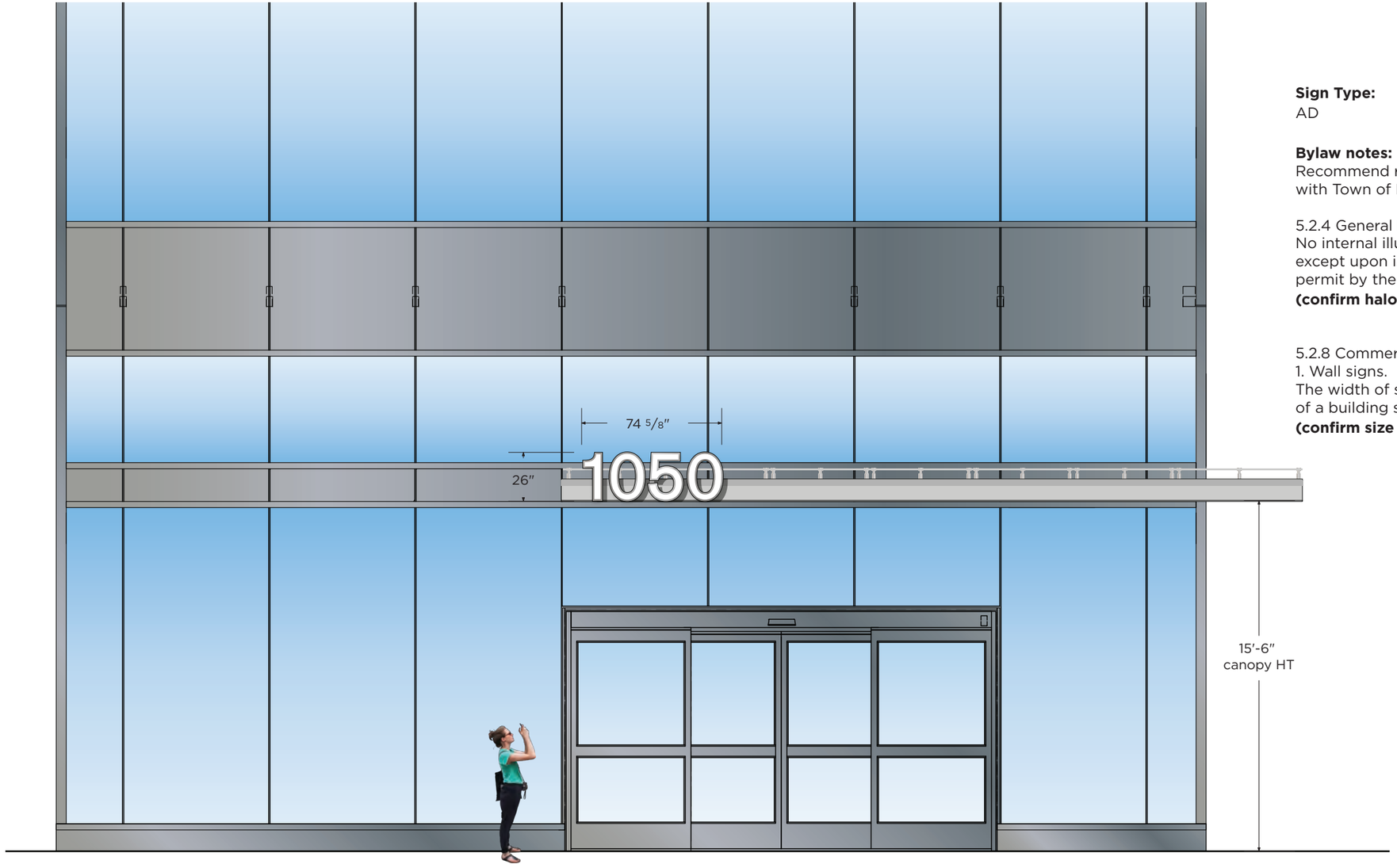

1 **Front Elevation**
3/16" = 1'-0"

SIGN AREA: 13.5 SF

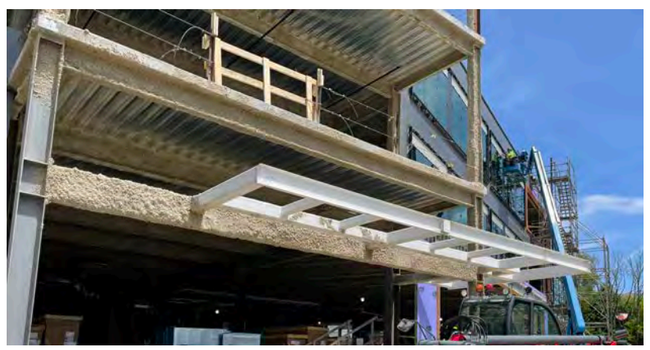

Sign Type:
AD

Bylaw notes:
Recommend reviewing the following
with Town of Lexington ahead of permitting:

5.2.4 General Regulations.
No internal illumination of a sign is permitted
except upon issuance of a special
permit by the SPGA
(confirm halo-lit is acceptable)

5.2.8 Commercial Districts.
1. Wall signs.
The width of such a sign above the first floor
of a building shall not exceed three feet.
(confirm size of address numerals are acceptable)

omloop
it's all connected

21 Bantry Road
Framingham, MA 01701
508.733.6440

omloopdesign.com

DATE

08.08.22

These drawings are intended to convey design-intent only. They are not for construction. The sign contractor, not the designer, is responsible for the final detailing, structural engineering, fabrication, and installation of the signs. This office shall review contractor's shop drawings and details prior to fabrication solely for conformance with the design intent documents. The sign contractor shall verify in the field all dimensions at the proposed sign locations prior to performing the work, and inform the owner and designer of any conflicts, as-built changes, or additional coordination required from other parties.

PROJECT NAME

REVOLUTION LABS
CORE AND SHELL
1050 WALTHAM ST.
LEXINGTON, MA

PROJECT #

DRAWN BY

BP/TJGP

SHEET TITLE

Design Intent Drawings
Pricing Set

SHEET NUMBER

AD BUILDING ADDRESS GS.14

Example: visual quality and layering

Example: halo-lighting and backer layer

Total Sign Area: **13.5 SF**

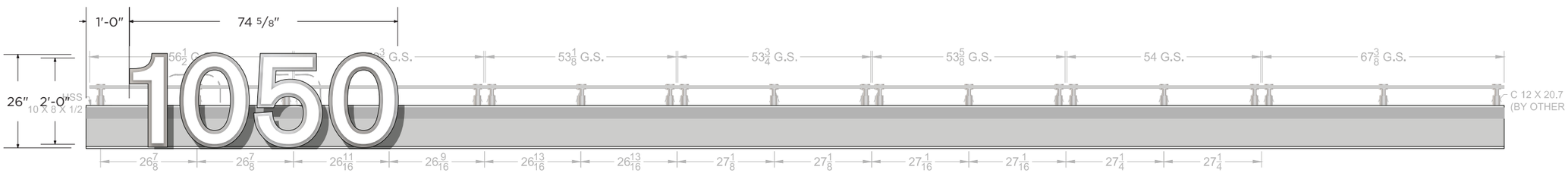

2 CANOPY C6 ELEVATION

1 **Canopy C6 Elevation**

SCALE: 3/8"=1'-0"

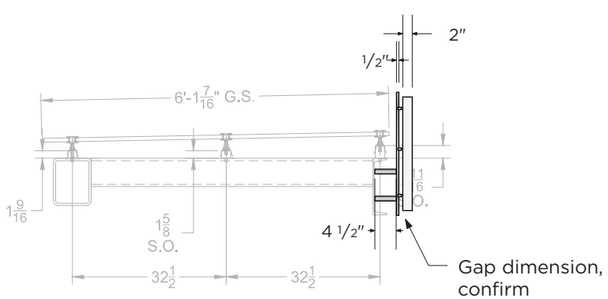

4 CANOPY C6 SECTION

Scale: 3/4" = 1'0"

2 **Canopy C6 Section**

SCALE: 3/8"=1'-0"

White

MP 41342SP Brushed Aluminum

Sign Type:
AD

Fabrication details:
Top layer address: fabricated reverse-channel, halo illum
Back layer address: 1/2" aluminum plate

Type specifications:
Akzidenz-Grotesk BQ Regular

Color specifications:
Back layer: MP 41342SP Brushed Aluminum
Top layer : MP32071 White Wonder

Mounting method and location:
Blind studs with standoffs, drilled and mounted to canopy face steel

Illumination:
Halo-lit (external)
Confirm acceptance with town

Bylaws and code considerations:
(see context elevation)

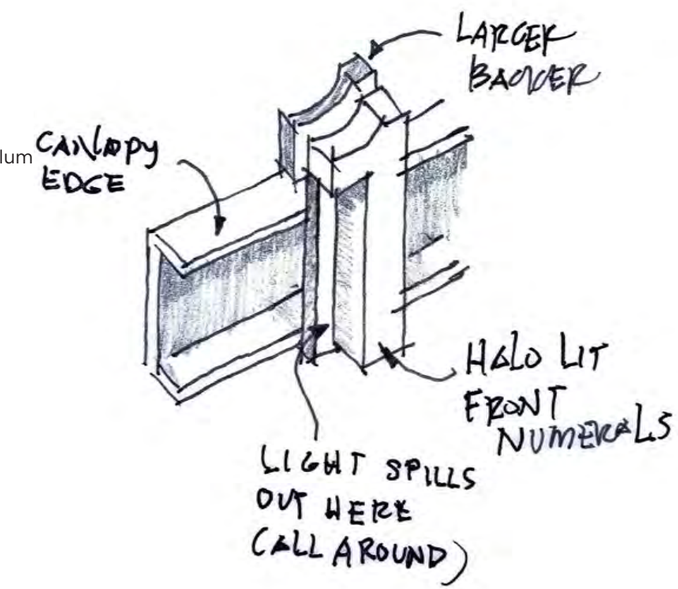

omloop
it's all connected

21 Bantry Road
Framingham, MA 01701
508.733.6440

omloopdesign.com

DATE

08.08.22

These drawings are intended to convey design-intent only. They are not for construction. The sign contractor, not the designer, is responsible for the final detailing, structural engineering, fabrication, and installation of the signs. This office shall review contractor's shop drawings and details prior to fabrication solely for conformance with the design intent documents. The sign contractor shall verify in the field all dimensions at the proposed sign locations prior to performing the work, and inform the owner and designer of any conflicts, as-built changes, or additional coordination required from other parties.

PROJECT NAME

REVOLUTION LABS
CORE AND SHELL
1050 WALTHAM ST.
LEXINGTON, MA

PROJECT #

DRAWN BY

BP/TJGP

SHEET TITLE

Design Intent Drawings
Pricing Set

SHEET NUMBER

AD BUILDING ADDRESS GS.15

Flush Right Layout

Flush Left Layout

1 **Exterior Entry Glass**

Scale: 1:4

omloop
it's all connected

21 Bantry Road
Framingham, MA 01701
508.733.6440

omloopdesign.com

DATE

08.08.22

These drawings are intended to convey design-intent only. They are not for construction. The sign contractor, not the designer, is responsible for the final detailing, structural engineering, fabrication, and installation of the signs. This office shall review contractor's shop drawings and details prior to fabrication solely for conformance with the design intent documents. The sign contractor shall verify in the field all dimensions at the proposed sign locations prior to performing the work, and inform the owner and designer of any conflicts, as-built changes, or additional coordination required from other parties.

PROJECT NAME

REVOLUTION LABS
CORE AND SHELL
1050 WALTHAM ST.
LEXINGTON, MA

PROJECT #

DRAWN BY

BP/TJGP

SHEET TITLE

Design Intent Drawings
Pricing Set

SHEET NUMBER

NSV / NO SMOKING, BUILDING ENTRIES GS.16

1 **Elevation (shown flat)**

Scale: 1:4 NS-FS

Fabrication details:
Sign panel: 1/2” aluminum plate, painted
Graphics: vinyl

Type specifications:
Akzidenz Grotesk BQ Bold Condensed

Color specifications:
Sign panels: PMS 2182c
Graphics: 3M™ Matte White 20

Mounting:
Baseplate, bolted to below-grade poured in place concrete footing

Matte White Scotchcal MW 20

PMS 2182c

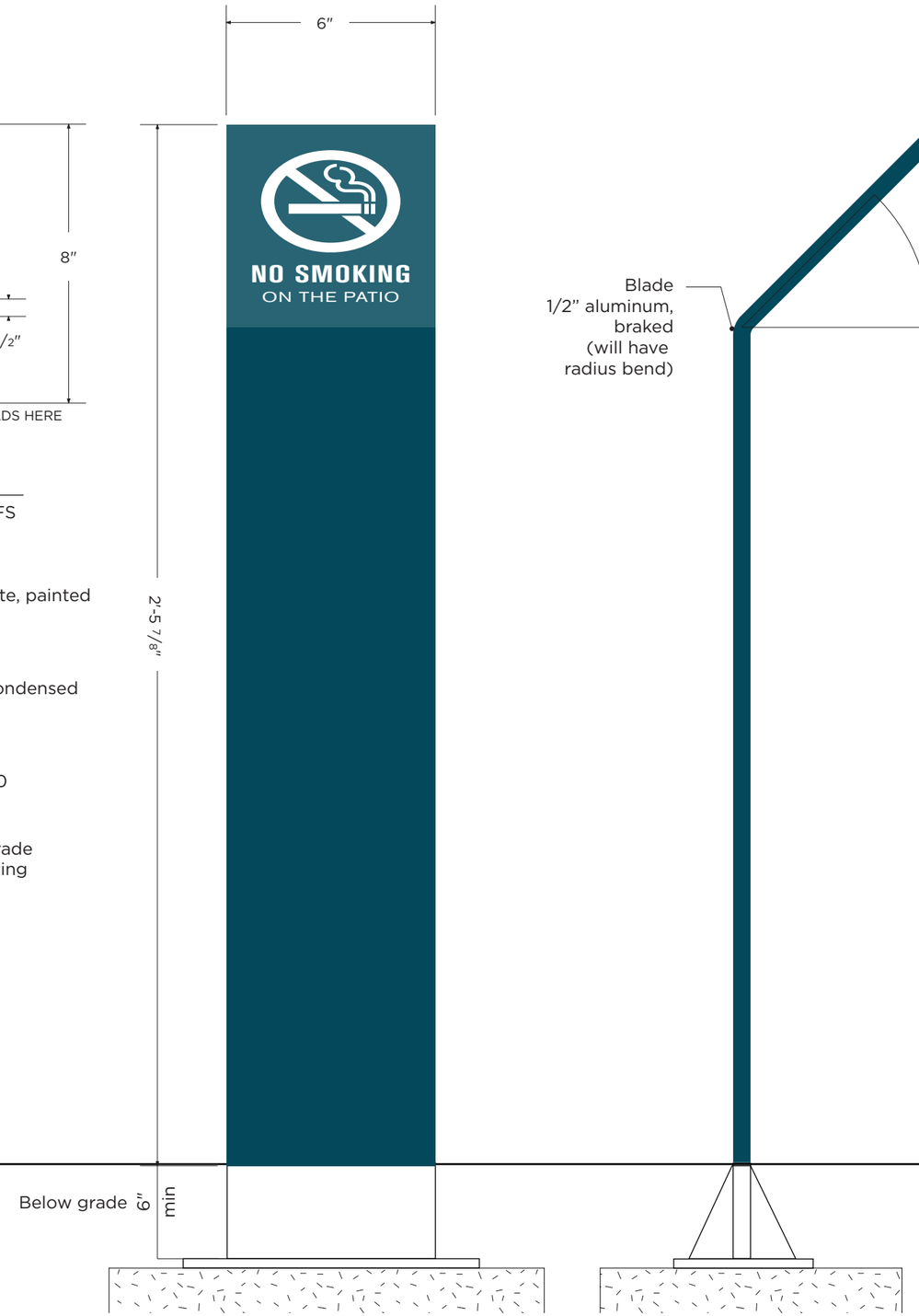

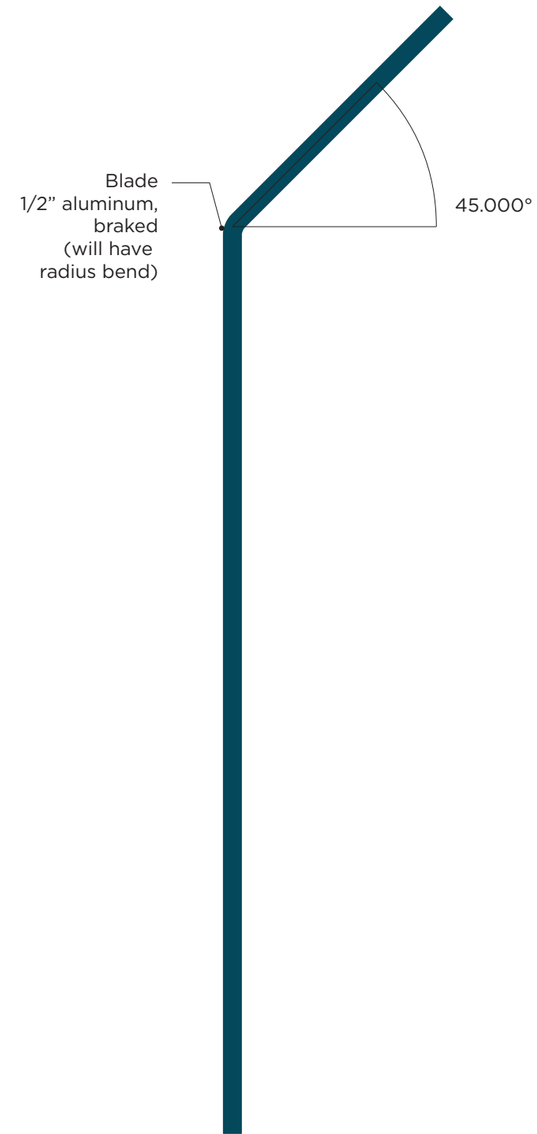

omloop
it's all connected

21 Bantry Road
Framingham, MA 01701
508.733.6440

omloopdesign.com

DATE

08.08.22

These drawings are intended to convey design-intent only. They are not for construction. The sign contractor, not the designer, is responsible for the final detailing, structural engineering, fabrication, and installation of the signs. This office shall review contractor's shop drawings and details prior to fabrication solely for conformance with the design intent documents. The sign contractor shall verify in the field all dimensions at the proposed sign locations prior to performing the work, and inform the owner and designer of any conflicts, as-built changes, or additional coordination required from other parties.

PROJECT NAME

REVOLUTION LABS
CORE AND SHELL
1050 WALTHAM ST.
LEXINGTON, MA

PROJECT #

DRAWN BY

BP/TJGP

SHEET TITLE

Design Intent Drawings
Pricing Set

SHEET NUMBER

Sign Type:
R1-1,
MUTCD-approved

Fabrication details:
Sign panel: .090” thick aluminum panel
Sign Post: steel, galv. with sleeved breakaway footing
Graphics: Retro-reflective vinyl

Type specifications:
MUTCD-approved standard graphics

Color specifications:
Post and back of sign: PMS 7546C

Mounting method and location:
Direct burial, poured in place concrete

Special notes:
None

PMS 2182c

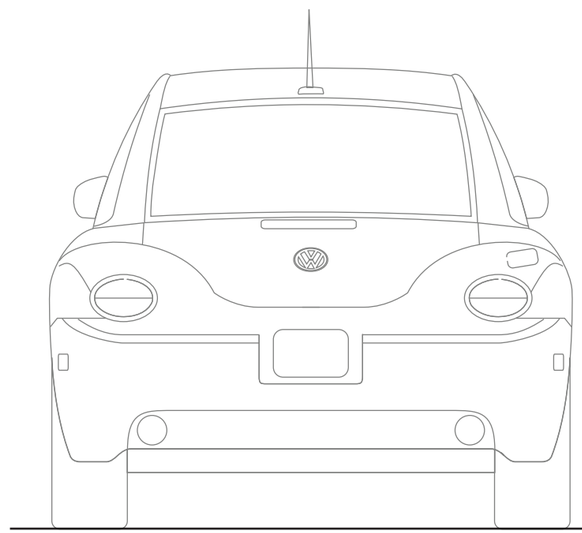

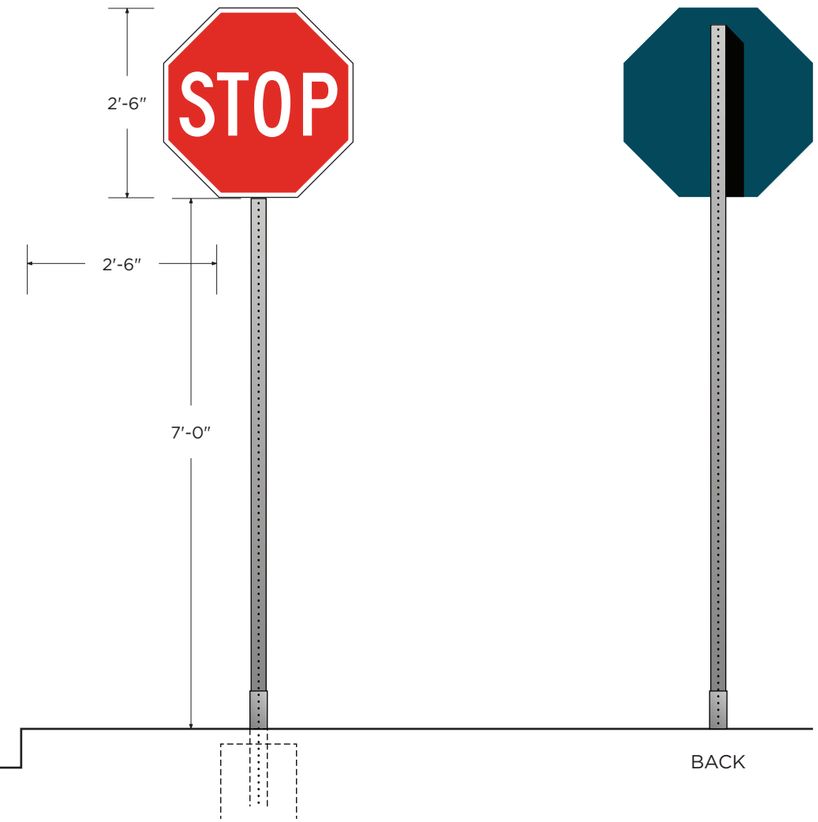

1 **Traffic Regulatory**
Scale: 1/2”=1’0”

omloop
it's all connected

21 Bantry Road
Framingham, MA 01701
508.733.6440

omloopdesign.com

DATE
08.08.22

These drawings are intended to convey design-intent only. They are not for construction. The sign contractor, not the designer, is responsible for the final detailing, structural engineering, fabrication, and installation of the signs. This office shall review contractor's shop drawings and details prior to fabrication solely for conformance with the design intent documents. The sign contractor shall verify in the field all dimensions at the proposed sign locations prior to performing the work, and inform the owner and designer of any conflicts, as-built changes, or additional coordination required from other parties.

PROJECT NAME

REVOLUTION LABS
CORE AND SHELL
1050 WALTHAM ST.
LEXINGTON, MA

PROJECT #

DRAWN BY
BP/TJGP

SHEET TITLE
Design Intent Drawings
Pricing Set

SHEET NUMBER

R1-1 STOP SIGN GS.18

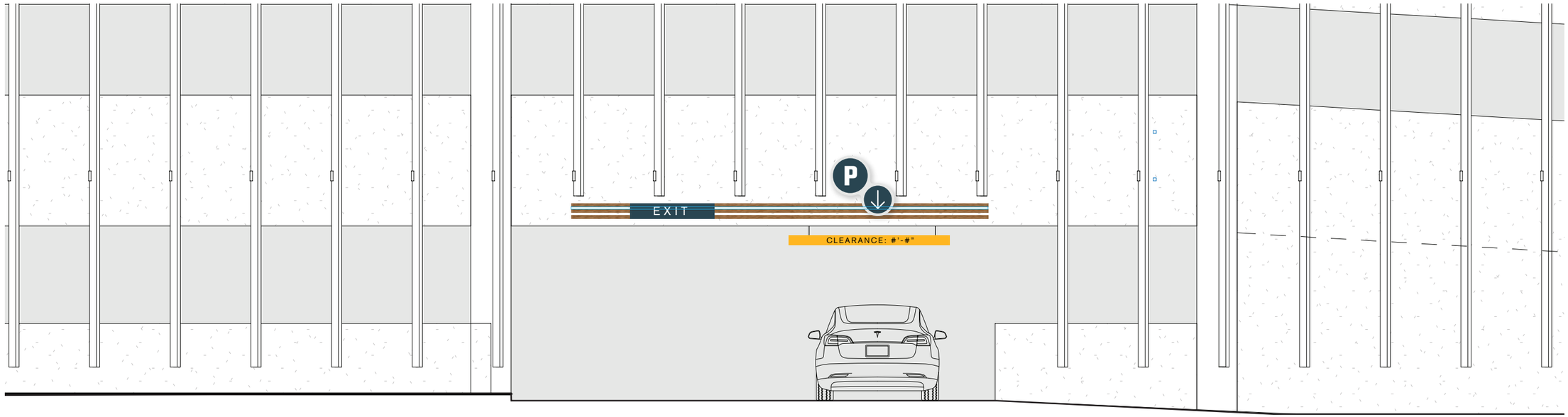

1 **Entry / West Elevation**

3/16" = 1'-0"

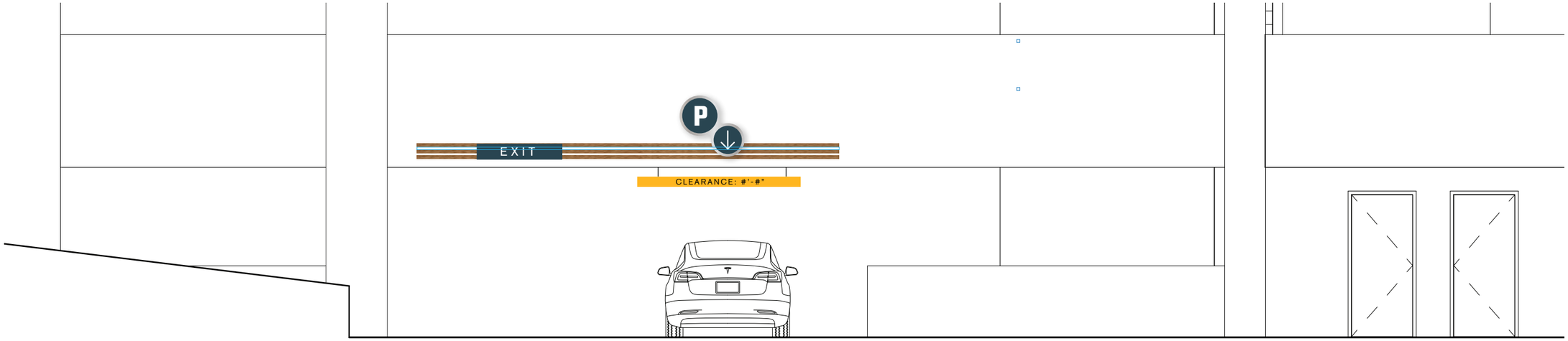

2 **Entry / North Elevation**

3/16" = 1'-0"

omloop
it's all connected

21 Bantry Road
Framingham, MA 01701
508.733.6440

omloopdesign.com

DATE

08.08.22

These drawings are intended to convey design-intent only. They are not for construction. The sign contractor, not the designer, is responsible for the final detailing, structural engineering, fabrication, and installation of the signs. This office shall review contractor's shop drawings and details prior to fabrication solely for conformance with the design intent documents. The sign contractor shall verify in the field all dimensions at the proposed sign locations prior to performing the work, and inform the owner and designer of any conflicts, as-built changes, or additional coordination required from other parties.

PROJECT NAME

REVOLUTION LABS
CORE AND SHELL
1050 WALTHAM ST.
LEXINGTON, MA

PROJECT #

DRAWN BY

BP/TJGP

SHEET TITLE

Design Intent Drawings
Pricing Set

SHEET NUMBER

GE1 PARKING ENTRY/EXIT GS.19

TOTAL SIGN AREA: 23SF

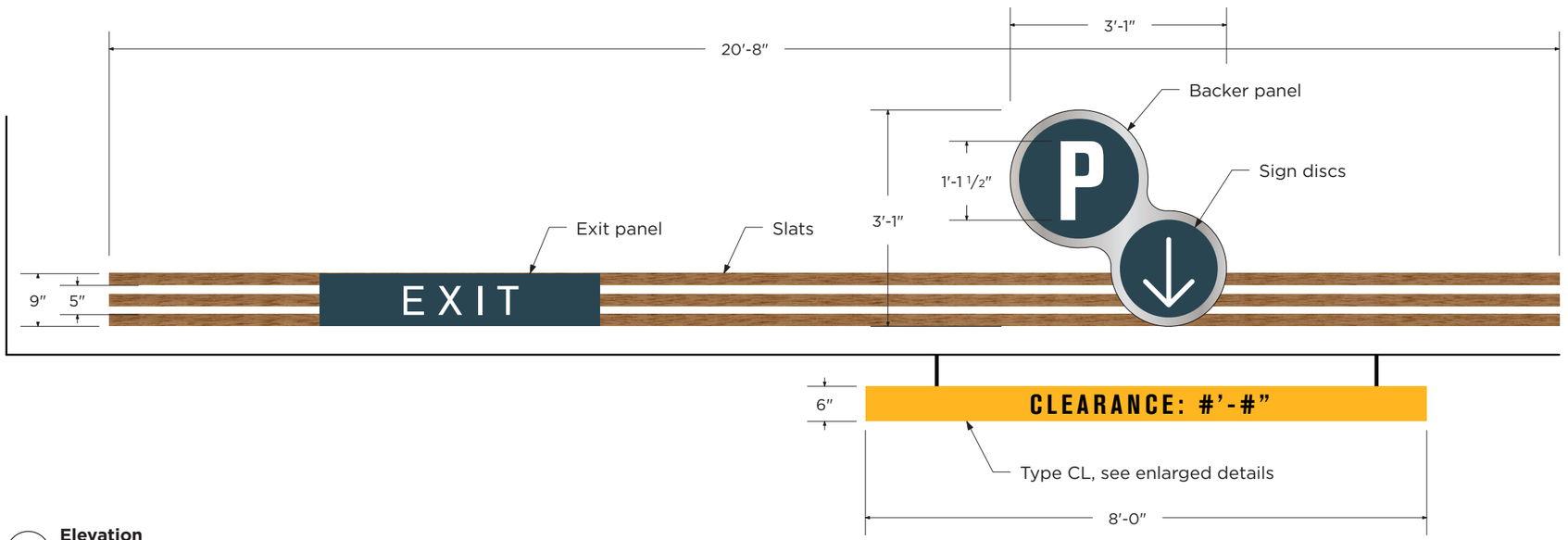

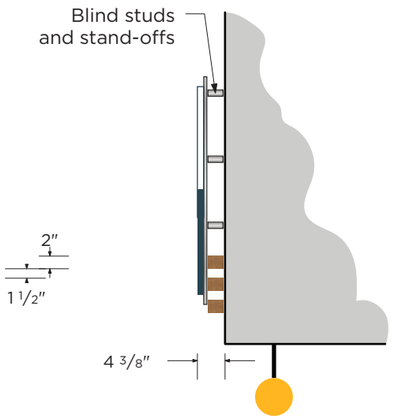

SIDE VIEW

1 **Elevation**
1/2" = 1'-0"

Fabrication details:
Horizontal slats: BN Fortina™, 50mmx60mm
Exit panel: 1/4" aluminum, painted
Backer panel: 1/2" thick, mounted to conc. with blind studs and standoffs
Sign disks: 1/" thick, painted, flush mounted
Graphics: vinyl

Type specifications:
Akzidenz Grotesk BQ (artwork as paths provided)

Color specifications:
Horizontal slats: BN Fortina™, TA-647 Earl Walnut
Exit panel, sign discs: PMS 2182C
Backer panel: MP 41342SP Brushed Aluminum
Graphics: White 3M™ Scotchlite 680-10

Mounting method and location:
Mounts to garage concrete sections

Special notes:
Non-illuminated sign
Coordinate anchor locations in post-tension concrete with GC

BN Fortina™ TA-647 Earl Walnut | Reflective White 3M™ Scotchlite 680-10 | MP 41342SP Brushed Aluminum | PMS 2182c

omloop
it's all connected

21 Bantry Road
Framingham, MA 01701
508.733.6440

omloopdesign.com

DATE
08.08.22

These drawings are intended to convey design-intent only. They are not for construction. The sign contractor, not the designer, is responsible for the final detailing, structural engineering, fabrication, and installation of the signs. This office shall review contractor's shop drawings and details prior to fabrication solely for conformance with the design intent documents. The sign contractor shall verify in the field all dimensions at the proposed sign locations prior to performing the work, and inform the owner and designer of any conflicts, as-built changes, or additional coordination required from other parties.

PROJECT NAME

REVOLUTION LABS
CORE AND SHELL
1050 WALTHAM ST.
LEXINGTON, MA

PROJECT #

DRAWN BY
BP/TJGP

SHEET TITLE
Design Intent Drawings
Pricing Set

SHEET NUMBER

GE1 / CL PARKING ENTRY/EXIT GS.20

END OF DOCUMENT

LEXINGTON PLANNING BOARD
1625 MASSACHUSETTS AVENUE, LEXINGTON, MA

MEMBERS OF THE PLANNING BOARD:
ROBERT CREECH, CHAIR – CHARLES HORNIG, VICE-CHAIR – ROBERT PETERS, CLERK – RICHARD CANALE – GINNA JOHNSON

DECISION OF THE LEXINGTON PLANNING BOARD
ON A MAJOR SITE PLAN REVIEW APPLICATION
THE PROPERTY LOCATED AT 1040-1050 WALTHAM STREET
DECISION DATED AUGUST 12, 2020

RECEIVED
2020 AUG 18 PM 2:55
LEXINGTON TOWN CLERK

General Property Information

Property Address: 1040-1050 Waltham Street
Assessor's Information: Map 5-14, Lot 68 (Parcel ID: 5-14)
Zoning District: Planned Development District, PD-5

Application Information

Application(s): Major Site Plan Review
Date application(s) were filed with the Town Clerk: July 27, 2020

General Project Contact Information

Property Owner and Applicant Name and Address: BH GRP 1050 Waltham Owner, LLC, c/o Greatland Realty Partners, 101 Federal Street, 19th Floor, Boston, MA
Project Contact and Civil Engineer: Christopher Nowak (#41843) and Nicholas Skoly (#52677), Vanasse Hangen Brustlin (VHB)
Project Attorney: Edmund Grant, Esq., Nicholson, Streter, Gilgun, P.C
Land Surveyor: Sean Ewald (#47143), BSC Group
Landscape Architect: Steven Woods and Christopher Jones, IBI Placemaking
Architects: Alfred Spangnolo (#5082) and Kristen O'Gorman (#951128), Spagnolo Gisness & Associates

Public Hearing Information

Date legal ad was published in the Minuteman Newspaper: July 23, 2020 and July 30, 2020
Date of opening public hearing: August 12, 2020

Project Site Plan Information

Date of Plan: July 15, 2020

Town Meeting Approval and Memorandum of Understanding (MOU)

- On March 9, 2020, the Select Board entered into a MOU with the owner of the property at BH GRP 1050 Waltham Owner, LLC
- At the June 1, 2020, Annual Town Meeting the Applicant requested approval of a Preliminary Site Development and Use Plan (PSDUP), dated December 19, 2019, revised through March 11, 2020. Town Meeting approved the PSDUP by a two-thirds (2/3) vote (183-3-2).

Project Description

The project is located at 1040-1050 Waltham Street, which is approximately a five point one-five (5.15) acre lot. The property is presently improved with two (2) office structures that are approximately sixty-eight thousand (68,000) sf and two-hundred and thirty-six (236) off-street parking spaces. The Applicant proposes to raze the existing office structures, while constructing one (1) new structure containing approximately 157,000sf occupiable space and one-hundred and eighty-four thousand (184,000) sf of gross floor area (including a mechanical penthouse). The new building will accommodate both office and laboratory space depending on the demands of the market. Furthermore, the project will provide the following: a new structured parking garage that will hold up to four-hundred and seventy-five (475) vehicles, stormwater management improvements, landscaping, sustainable design elements, in addition to other associated site improvements.

Public Hearing

The Lexington Planning Board held its opening public hearing for the project located at 1040-1050 Waltham Street on August 12, 2020. Planning Board members present throughout the public hearing were: Robert Creech, Chair; Robert Peters, Vice-Chair; Ginna Johnson, Clerk; Richard Canale; and Charles Hornig. During the course of the public hearing process, the following individuals appeared on behalf of the Applicant: Kevin Sheehan, Greatland Realty Partners; Philip Dorman, Greatland Realty Partners; Attorney Edmund Grant, Nicholson, Sreter & Gilgun, P.C.; Bob Michaud, MDM Transportation; Kristen O'Gorman, Spagnolo Gisness & Associates; Steven Woods, IBI Placemaking Group; Nicholas Skoly, VHB; Chris Schaffner, The Green Engineer; Carrie Hawley, HLB Lighting; Michael Bahtiarian, Acentech; and Kristen Murphy, Acentech.

Summary of Minutes

On August 12, 2020, the Planning Board opened the public hearing, read the legal ad into the record, and then requested a presentation from the Applicant.

Attorney Grant reviewed the project and provided an introduction to the project team. Mr. Sheehan provided a brief review of the project and the process taken to get to this point.

Ms. O'Gorman presented to the Planning Board the proposed site plans and the architectural renderings for the project.

On August 12, 2020, members of the Planning Board provided the following comments.

The Planning Board reviewed with the Applicant's project team the noise study, the proposed transportation mitigation and how the Applicant would move people away from the single occupancy vehicle, the landscaping that include a request for relocation of tree species and hardscape features, the proposed bus stop, and the architecture.

On August 12, 2020, the Planning Board opened the floor for public comments. No public comments were provided. All comments can be reviewed on the video stream capture of the public hearing and the associated meeting minutes.

FINDINGS

During the course of the public hearing process, the Planning Board took under advisement all information received from various municipal departments, comments from the Planning Board, in addition to comments made by members of the public; and information submitted by the Applicant. The Planning Board arrived at this Decision based on the Zoning Bylaw Section 7.3.2 provisions applicable to Planned Development Districts and Section 9.4 Site Plan Review and associated regulations in Section 9.4.2. and makes the following findings specifically for the project at 1040-1050 Waltham Street.

A. Property and Neighborhood Characteristics
   a. The property located at 1040-1050 Waltham Street is approximately five point one-five (5.15) acres. The property was formerly in the Local Office (CLO) Zoning District.
   b. The property is presently improved with two (2) office structures (one (1) that is two (2) stories and the other is three (3) stories) that were built in the 1970's with special permits issued in 1970 and 1979. The site is also improved with two-hundred and thirty-six (236) off-street surface parking spaces.
   c. The property was rezoned as a Planned Development, PD-5 District at an Annual Town Meeting on June 1, 2020, pursuant to the Preliminary Site Development and Use Plan (PSDUP) dated December 19, 2019 revised March 11, 2020.
   d. The property is located on the Lexington – Waltham municipal boundary. The project has been designed to serve as the gateway into Lexington.
   e. Prior to approval of the PSDUP, at the June 1, 2020, Annual Town Meeting, the Select Board and BH GRP 1050 Waltham Owner, LLC, the property owner, entered into a Memorandum of Understanding (MOU) that was executed on March 9, 2020.
   f. The structure will be designed to have ADA accessible entries, in addition to having sidewalk and accessible ramps installed where required to accommodate building entry.
   g. The Applicant has designed the project to comply with Section 9.5, Site Plan Review, Design Standards of the Lexington Zoning Bylaws, unless such design standards were modified in the approved Preliminary Site Development and Use Plan (PSDUP), for the PD-5 District.
   h. The proposed project has incorporated the pedestrian realm with a new sidewalk and a relocated and improved crosswalk at Waltham Street, and an easement for access to nature trails on the adjacent Brookhaven property.
   i. The Applicant worked with the neighboring property (Brookhaven) to address concerns regarding the design of the structure, the roof top equipment, and the construction of a pedestrian path connection between the properties.

B. Traffic and Parking
   a. The Applicant has provided an initial draft Parking and Transportation Demand Management (PTDM) Plan, for the Multi-Tenant Life Science Center at 1050 Waltham Street, dated March 9, 2020, which was developed in accordance with the Planning Board Zoning Regulations c. 176 Section 9.4.2(6) Major Site Plan Review.
   b. The property has frontage on Waltham Street. The property is accessed via two driveways off Waltham Street, which will continue to be the case post redevelopment.

c. The proposed uses that comprise the project require a minimum total of four hundred sixteen (416) and a maximum total of four-hundred and seventy-five (475) off-street parking spaces that will be located within a six (6) floor parking structure. The initial striping plan for the parking garage will include the minimum of four-hundred and sixteen (416) total spaces.

d. The Applicant committed to the following program elements as outlined in the Parking and Transportation Demand Management (PTDM) Plan, for the Multi-Tenant Life Science Center at 1050 Waltham Street, dated March 9, 2020 (Attachment A).

   i. Route 128 Business Council Membership; having an on-site Transportation Coordinator; Shuttle Services to and from Alewife subway station; Pre-Tax Transit Pass Sales Program; Employee Transit Subsidies; On-Site Showers/Lockers; Bike Share Program; Bicycle Storage Facilities; Bicycle Network – Waltham Street; garage space for Car Share Service; On-site Support Services/Amenities; online Listing of Alternative Transit Services; Transportation Management Events; Town Sponsored Transportation Events; Electric Vehicle Charging Stations; HOV Parking Spaces; Nature Trail Promotion and Wayfinding; Enhanced Pedestrian Crossing/Connectivity – Waltham Street; Bus Stop/Shelter; Tenant Manual Annual Reporting.

C. Storm water and Environmental Impact

a. The project has been designed to conform to the Stormwater Management Standards, per Chapter 114 of the Code of Lexington. Also, all stormwater management facilities will comply with the applicable Department of Environmental Protection's Stormwater Management Regulations, 314 CMR 21.00 et seq, as may be amended.

b. All installation and maintenance of erosion control barriers will be conducted in accordance with Best Management Practices (BMP) and on a regular basis.

c. An existing bordering vegetated wetland is located on the northern side of the Site. This wetland falls within a retention basin that was built in the early 1980s in order to service the stormwater runoff for the Site and surrounding properties. No other recent changes have occurred to the Site. The northern part of the basin is now considered a bordering vegetated wetland and was identified as such in September 2019. A second bordering vegetated wetland was identified in September 2019 on the eastern corner of the Site.

d. The Property does not contain any Priority Habitat of Rare Species or Estimated Habitat of Rare Wildlife located on or adjacent to the property.

e. There are no vernal pools on or within one-hundred (100) feet of the property.

D. Utilities

a. The property is presently connected to both municipal water and sewer, which will continue to be the case post construction.

b. The property is improved with a private pump station that services the wastewater discharge from the two (2) existing office buildings. Based on the review of the Concord Avenue Pump Station, there is capacity to handle the proposed project's wastewater demand. As part of the project, the existing private pump station that currently services the site will be decommissioned.

c. The Project will include the installation of new water lines, gas, electric and telecommunication services.

E. Sustainability

a. The project has been designed in accordance with LEED v4 for BC+C: New Construction and Major Renovation. Based on the LEED Project Checklist, dated July 15, 2020, the project is capable of achieving 52 LEED points, which is sufficient to achieve a potential "Silver" LEED rating.

F. Ambient Noise

a. The Applicant has contracted with Acentech to conduct an ambient noise survey. Acentech provided a letter, Subject: Community Noise Evaluation, 1040-1050 Waltham Street, Lexington, MA, Acentech Project No.: J632885, dated July 15, 2020

b. The Applicant, in the executed Memorandum of Understanding (MOU), is required to comply with the Town's Noise Control Bylaw (Chapter 80 of the Town's General Bylaws) and additionally requires that HVAC systems under full load not exceed 5 dB above the established ambient noise level between the hours of 10:00 pm and 6:00 am.

CONDITIONS OF APPROVAL

The Planning Board finds that the Application and Site Plans submitted by the Applicant comply with all applicable provisions of Lexington's Zoning Bylaw and applicable regulations, relevant to this review, except those waived by the Planning Board during the public review of the project. Accordingly, the Planning Board votes to approve the plan subject to the following conditions:

A. General Provisions.

1. This approval is subject to the Preliminary Site Development and Use Plan (PSDUP) approved by Town Meeting at the June 1, 2020 Annual Town Meeting, the plans dated July 15, 2020 as submitted for this Site Plan Review application, and the Memorandum of Understanding (MOU) executed on March 9, 2020.
2. The Applicant shall record this Decision with any exhibits and the MOU with the Middlesex South Registry of Deeds prior to the commencement of authorized site activity and shall submit proof of recording to the Planning Board. Failure to record this Decision prior to the commencement of authorized site activity shall result in rescission of this Decision.
3. The Applicant shall comply with the approved site plan dated July 15, 2020, as amended during the public hearing process on August 12, 2020.
4. The Property Rights and Dimensional Standards Plan and Site Layout Plan, has been revised to show all required easements, which shall be granted to and accepted by the Select Board.
5. In the event that the permit is not exercised nor substantial use thereof has not commenced from three (3) years of the date of recording, except for good cause as determined by the Planning Board, the permit shall be deemed null and void.
6. A copy of this Decision shall be kept on the Site in a location that is highly visible and accessible during construction.
7. All construction activities relative to this decision shall comply in all respects to all applicable Zoning Bylaw, Planning Board Zoning Regulations, and other municipal requirements except as specifically modified or waived by the Preliminary Site Development and Use Plan (PSDUP).

RECEIVED
2020 AUG 26 PM 2:56
TOWN CLERK
LEXINGTON, MA

8. No material corrections, additions, substitutions, alterations, or any changes shall be made in any plans, proposals, and supporting documents approved by the Planning Board without the written approval of the Planning Board, or their designee. Any request for a material modification of this approval shall be made in writing to the Planning Department for review and approval by the Planning Board, or their designee and shall include a description of the proposed modification, reasons for the modification and any supporting documentation. Upon receipt of such a request, the Planning Department may, in the first instance, make a determination in writing authorizing a minor modification to the site plans. Alternatively, the Planning Director may refer the matter to the Planning Board, which may consider and approve minor modifications at a regularly scheduled Planning Board meeting. In the event the Planning Board determines the change is major in nature (e.g., resulting in material changes, newly identified impacts, etc.), the Planning Board shall consider the modification at a future, noticed public hearing.
9. Any work in a public right-of way and utility work is subject to the Department of Public Works Rules and Regulations.
10. Members or agents of the Planning Board shall have the right, with prior notice to Applicant, to enter the site and to gather all information, measurements, photographs, or other materials needed to ensure compliance with this approval. Members or agents of the Planning Board entering onto the site for these purposes shall comply with all safety rules, regulations and directives of the Applicant and the Applicant's contractors.
11. Hours of exterior construction are limited to 7:00 AM - 5:30 PM Monday through Friday and 8:00 AM - 4:00 PM on Saturday. Absent emergency conditions, no construction is permitted on Sunday or the following holidays: New Year's Day, Memorial Day, 4th of July, Labor Day, Thanksgiving, and Christmas Day – or following Monday when the holiday falls on a weekend). No equipment on-site shall be started and allowed to warm up prior the start of the allowed construction hours or hours outlined in the Lexington Noise Control Bylaw. No vehicles are to arrive at the construction Site before the designated construction hours, which includes no vehicle parking, standing or idling on adjacent public streets. Oversized deliveries of construction materials shall occur before or after peak traffic hours.

B. <u>Site Preparation and Pre-Construction</u>

12. A minimum of fourteen (14) days prior to the commencing construction the Applicant or designee shall contact the Planning Office to schedule a pre-construction meeting. In addition, the applicant shall submit a construction schedule.
13. At the pre-construction meeting, the project team shall provide the name, address, and emergency contact telephone number of the individual or individuals who shall be responsible for all activities on site and who can be reached twenty-four (24) hours a day, seven days a week. In the event project management changes, all new contact information shall be submitted to the Planning Office within (24) twenty-four hours.

C. <u>Construction and Site Development</u>

14. The limits of clearing of land or grading for the installation of any improvements relative to the project, including, but not limited to the driveways, stormwater management system, and utilities, shall be the limits of the grading shown on the site plans. Prior to any clearing of the

land, the limits of such clearing and grading as shown on the approved plan shall be clearly marked in the field and shall remain in place until the completion of the project construction.

15. The Applicant shall perform daily cleanup of construction debris, including soil on municipal streets within two hundred (200) yards from the entrance of the site driveways caused by construction relative to the project.

D. Environment

16. All stormwater and erosion control management shall be checked prior to the start and finish of each workday.
17. The Applicant shall check all stormwater features prior to and at the end of each construction day. In the event a multiple day storm event occurs, the project manager shall check on the stormwater features to ensure they are functioning properly and have not exceeded their capacity. Any repairs, adjustments, or deficiencies shall be made immediately.
18. The Applicant shall provide appropriate erosion control methods as approved in the Stormwater Permit. Silt fences and straw wattle shall be placed around the stockpiles in case of a storm event, in addition to the temporary dust control requirements.
19. The use of hay bales shall be prohibited on-site.
20. The Applicant shall provide straw wattle and other erosion control methods at the base of the driveway during off-construction hours to prevent runoff and erosion from getting onto the public way.
21. Construction of the project requires the issuance of an Order of Conditions by the Conservation Commission. All requirements, terms and conditions of the Order of Conditions are incorporated herein.

E. Snow Storage

22. Snow storage shall not be located within off-street parking spaces for a duration greater than twenty-four (24) hours post-weather event.
23. Snow storage shall not obstruct sight lines to preserve public safety or interfere with site circulation. Snow storage shall be on the Applicant's property and not on Waltham Street or the respective right of way.

F. Request for a Certificate of Occupancy

24. A minimum of fourteen (14) days prior to a request for a Certificate of Occupancy, the Applicant and/or designee shall contact the Planning Office to schedule a conformance review meeting. Delay in such action may result in the delay of the Planning Department signing off on a Certificate of Occupancy.

G. Departmental Comments

25. The Applicant shall comply with all applicable State Building and Fire Codes.
26. The Applicant shall meet with the Department of Public Works (DPW) to ensure that the project complies with DPW regulations, policies, and standards.

H. Traffic/Transportation

27. The Applicant shall comply with the requirements as outlined in the Parking and Transportation Demand Management (PTDM) Plan, for the Multi-Tenant Life Science Center at 1050 Waltham Street, dated March 9, 2020 (Attachment A)

28. The Applicant shall construct four-hundred and seventy-five (475) off-street parking spaces but only make four-hundred and sixteen (416) available for use. The remaining fifty-nine (59) off-street parking spaces may be used if the Applicant demonstrates to the Planning Board in writing the need for such spaces.
29. The Annual Reporting required in the PTDM Plan shall include a Parking and bike inventory that quantifies the garage and surface parking supply and parking use by category including HOV/carpool, handicap accessible, car share spaces, EV charging spaces, and visitor spaces for both available spaces and occupied spaces.

I. Off-street Parking Lot

31. The accessible parking spaces shall be constructed in accordance with 521 CMR Universal Design (to prevent people from parking in the hatched area).
32. The dumpster shall be enclosed in an enclosure that has doors, with a latching mechanism, and shall be screened from pedestrian views.
33. Exterior lighting associated with the project shall be dimmed or turned off between 10:00 PM and 6:00 AM, with the exception of safety and security lighting.

J. Landscaping and Streetscape

34. All ground utility equipment shall be screened with landscaping, fencing, and other visually appealing materials. Such screening shall be made to buffer noise and decrease the visual impacts of such infrastructure.
35. Approved plant selection shall be subject to availability at the time of planting; plant substitutions shall be submitted and approved by the Planning Office prior to a substitution of a planting. Any amendments to the landscape plan shall be shown on the as-built plan.

K. Trail Connection

36. The Applicant agrees to construct and maintain an accessible path between the Brookhaven property and 1040-1050 Waltham Street. The use of this path is subject to Applicant's reasonable rules and regulations.

L. Special Provisions/Periodic Conformance Reporting and Review

37. The Applicant shall provide the following performance guarantees for the Project.
    a. Upon completion of the Project and prior to the request for a Certificate of Occupancy, the Applicant shall provide the Planning Board with an "As Built Plan" stamped by a Professional Engineer registered in the Commonwealth of Massachusetts certifying that all improvements are completed in accordance with the approved Site Plans in a form acceptable to the Lexington Engineering Division.
    b. The as-built plan shall be submitted in both hard copy and electronic formats (PDF and AutoCAD) to the Planning Office for review. The AutoCAD file must conform to the current form of the Mass GIS Standard for Digital Plan Submission to Municipalities or other standard requested by the Lexington Engineering Division. The plan shall include, but not be limited to, site utility improvements and tie-in dimensions to all pipes and connection points. The as-built information shall be delivered to Planning Division a minimum of five (5) business days in advance of the Applicant seeking a Certificate of Occupancy sign-off to allow time for the Town Engineer, or designee to review and approve the submitted information. The Applicant shall also submit a statement

certifying that all conditions of approval of this decision have been met and site improvements are complete.

38. All utilities shall employ energy efficient devices and techniques in accordance with the State Building Code, which may include but are not limited to Energy Star, LED lighting, etc.
39. All utilities will be located underground. Overhead electric and telecommunications services will be extended underground to service the project.
40. Signage associated with the project shall comply with the PSDUP.
41. The Applicant shall submit a sign package for review and approval by the Planning Board during a public meeting prior to the issuance of an occupancy permit.

RECEIVED
2017 OCT 10 PM 2:53
TOWN CLERK
LEXINGTON, MA

Waivers

No waivers were requested for this project

VOTE

The Planning Board voted four (4) in favor, one (1) opposed, and zero (0) in abstention to grant an approval with conditions for the Major Site Plan Review Application for the property at 1040-1050 Waltham Street.

Major Site Plan Review

Robert Creech . . . . . yes
Robert Peters. . . . . yes
Ginna Johnson. . . . . yes
Richard Canale . . . . . .no
Charles Hornig . . . . . yes

RECORD OF VOTE

On May 13, 2020, made the following motion and voted to allow the Planning Board Chair sign the Decision on behalf of the Planning Board.

Charles Hornig moved that the Planning Board vote to allow the Chair of the Planning Board to sign all documents for the Planning Board during the COVID State of Emergency. Robert Peters seconded the motion. The Planning Board voted in favor of the motion 5-0-0 (Roll Call: Robert Peters – yes; Charles Hornig – yes; Richard Canale – yes; Ginna Johnson – yes; and Robert Creech – yes). MOTION PASSED

Signature of the Chair: _____

Date: 17 August 2020

RECEIVED
2020 AUG 18 PM 2:56
TOWN CLERK
LEXINGTON, MA

EXHIBITS

Not attached unless indicated

The Applicant has filed with the Planning Board various plans and reports required under the requirements of the Lexington Zoning Bylaws and Planning Board Zoning Regulations. During the review process, the Applicant and its professional consultants also submitted revisions to plans in response to requests by the Planning Board and by the various municipal departments that reviewed the Project. All of these plans, reports and correspondence are contained in the Planning Board's files and are hereby incorporated into this Decision by reference.

1. Cover letter from Greatland Realty Partners, Re: 1050 Waltham Street (Revolution Labs), Major Site Plan Review Application, dated July 15, 2020
2. Form B – General Application for Approval of a Plan for Development for the property at 1050 Waltham Street (Revolution Labs), dated July 15, 2020, stamped with the Town Clerk on July 27, 2020
3. Memo from VHB, Re: 1050 Waltham Street Redevelopment Sewer Capacity Analysis Memorandum, dated July 15, 2020
4. Alternative HVAC Systems Options Memorandum, Revolution Labs 1040/1050 Waltham Street, Lexington, MA, prepared by AHA, dated July 14, 2020
5. Memo from Acentech, Subject: Community Noise Evaluation, 1040-1050 Waltham Street, Lexington, MA, Acentech Project No,: J632885, dated July 15, 2020
6. Revolution Labs, Garage & Internal Illumination Narratives (Garage and Internal Illuminance), HLB Lighting Design, dated July 15, 2020
7. LEED v4 for BD+C: Core and Shell Project Checklist, prepared by The Green Engineer, dated July 15, 2020
8. Design Standards Compliance Checklist
9. Site Plans for Revolution Labs (1050 Waltham Street), Lexington, Massachusetts, dated July 15, 2020
10. Memorandum of Understanding ("MOU") between BH GRP 1050 Waltham Owner LLC (the "Owner") and the Town of Lexington, Massachusetts (the "Town") for 1050 Waltham Street, Lexington (the "Property"), dated March 9, 2020
11. Parking and Transportation Demand Management, Multi-Tenant Life Science Center, 1050 Waltham Street, Lexington, Massachusetts, prepared by MDM Transportation Consultants, Inc., dated March 9, 2020
12. Memo from Greatland Realty Partners, Re: 1050 Waltham Street – Revolution Labs, Site Plan Review, Project Updated, dated July 29, 2020

The Planning Board received correspondence from various municipal Departments who reviewed the Project, and such has been incorporated herein by reference.

1. Legal ad for the opening public hearing on August 12, 2020, which was run in the Minuteman Newspaper on July 23, 2020 and July 30, 2020
2. Staff Memo from the Planning Office, Re: Second Project Review for 1050 Waltham Street; Major Site Plan Review, dated August 4, 2020

Attachment A

Parking and Transportation Demand Management, Multi-Tenant Life Science Center, 1050 Waltham Street, Lexington, Massachusetts, prepared by MDM Transportation Consultants, Inc., dated March 9, 2020

RECEIVED
2020 MAR 16 PM 2:56
TOWN CLERK
LEXINGTON, MA

PARKING AND TRANSPORATION DEMAND MANAGEMENT

MULTI-TENANT LIFE SCIENCE CENTER

1050 Waltham Street
Lexington, Massachusetts

Prepared for:
Greatland Realty Partners LLC

RECEIVED
TOWN CLERK
LEXINGTON, MA
2020 MAR 12 PM 2:56

March 9, 2020

MDM TRANSPORTATION CONSULTANTS, INC.
Planners & Engineers

EXECUTIVE SUMMARY

This report presents an initial draft Parking and Transportation Demand Management (PTDM) program for the proposed multi-tenant life science center located at 1050 Waltham Street in Lexington, MA (The "Property"). The PTDM presented herein is developed in accordance with requirements of Planning Board Zoning Regulations Ch. 176 §9.4.2(6) Major Site Plan Review and provides the basis for subsequent PTDM reporting to the Town.

E.1 PROJECT DESCRIPTION

The existing Site is located at 1040-1050 Waltham Street which includes two general office buildings totaling 68,000± sf and a 236± space surface parking lot. Access is currently provided via two driveways along Waltham Street. Under the proposed programming, the existing office buildings and parking areas will be removed and a new 157,000± sf building will be constructed with on-site parking provided for up to 475± vehicles with a combination of surface spaces and structured parking. Proposed access/egress is proposed via two driveways along Waltham Street at/or near the location of the existing southern driveway and to the north of Lexington Ridge Drive.

E.2 TRIP GENERATION

New traffic generated by the project was estimated using trip rates published in ITE's *Trip Generation*[1] assuming an office use, Land Use Code (LUC) 710 – General Office. While actual tenancy of the Site is expected to principally be research and development and lab space, the use of this land use category for analysis of impact purposes represents a conservatively high trip estimate of likely operations at the Site. Further, no trip credits (reduction) were taken for

[1] *Trip Generation*, 10th Edition; Institute of Transportation Engineers; Washington, DC; 2017.

alternative transportation modes or internal trips between the various on-site uses; actual trip activity is again likely to be lower than estimated assuming implementation of an effective PTDM program for the Site.

Projected trip generation based on unadjusted ITE trip rates and no credit for PTDM programming would result in a total trip generation of approximately 182 trips (157 entering and 25 exiting) during the weekday morning peak hour and 181 trips (29 entering and 152 exiting) during the weekday evening peak hour. On a daily basis the project is estimated to generate approximately 1,530 trips with half entering and half exiting over a 24-hour period.

Relative to existing Site occupancy by 68,000 sf of office use, the proposed (redeveloped) campus results in a net increase of 868 new daily vehicle-trips, 103 vehicle-trips during the weekday AM peak hour and 103 vehicle-trips during the weekday PM peak hour. This scenario represents operations under a development scenario with an all office use of the buildings on the Property.

E.3 PTDM MITIGATION

PTDM policies are to be implemented by the proponent as outlined below that is consistent with the principles outlined in the Town's Transportation Management Overlay District plan. These principles include multimodal consideration and PTDM techniques that are reasonably calculated to reduce the number of vehicle trips generated by a development, and that encourages voluntary participation in PTDM programs by those not required to participate. The PTDM comprises physical elements as well as programmatic elements that include programs and policies cited herein.

The PTDM Plan endeavors to provide equitable access to various transportation modes for campus tenants and visitors as well as offer associated incentives to encourage the use of travel modes that reduce dependency on single occupant vehicle (SOV) use. The Plan seeks to achieve this by incorporating design elements and programs that encourage biking, walking, ride sharing and transit use which include a system of sidewalks that integrate with the pedestrian and bicycle infrastructure along Waltham Street and Lexington Street (Waltham); expands on-site bicycle accommodations including bike parking as well as supporting features such as shower and locker facilities; establishes a bike and car share program; provides a shuttle bus connection to public transit and a transit subsidy program; and offers a participation incentive program that rewards participation in alternative travel modes including vanpools/carpools.

Parking and Transportation Demand Management (PTDM) Commitments

Greatland commits to the following program elements as part of the PTDM for the Property:

- *Route 128 Business Council Membership.* Greatland will join as a paid member of the Route 128 Business Council. This partnership will provide the 1050 Waltham Street tenants with valuable resources including:
  - Carpool matching database
  - Bay State Commute (The Commonwealth's ridematching and rewards program)
  - Alewife Shuttle (subject to extension to Waltham Street/pending)
  - Emergency Ride Home
  - Individual transportation and route planning assistance
  - Bicycle route maps and route planning assistance
  - On-site commuter benefit events
  - On-line trip planning tools

- *Transportation Coordinator.* Greatland will designate a transportation coordinator that communicates with tenant employees through frequent emails, tweets, and building memorandums announcing programs, incentives, reminders, and other useful information intended to decrease single occupancy vehicles (SOV's).

- *Shuttle Services.* Greatland will participate in a sponsorship of the Alewife Shuttle if and to the extent that the service currently serving the Hayden Avenue corridor (Alewife Route A North Shuttle) can be expanded to include 1050 Waltham Street; the feasibility of such extension will be determined through consultation with the Route 128 Business Council. Alternatively, Greatland will collaborate with surrounding property owners to fund a shuttle serving the Waltham Street corridor that provides a connection to the Alewife Station.

- If the Route 128 Business Council shuttle cannot be extended to serve the Project, or another shuttle service cannot be provided to serve the Project in collaboration with surrounding property owners, Greatland will develop a shuttle system unique to the property to provide service to employees from 1050 Waltham Street to the Alewife MBTA Station. Monitoring of shuttle promotion and ridership during this trial period will be conducted daily with reporting to the Town to determine continued viability of the service. At any time in the future in which the operation of this shuttle service is no longer adequately used, Greatland may petition the Select Board to discontinue the shuttle service, at which time, Greatland shall contribute $5,000 per year payable to the Town each July 15th to develop a shared shuttle with other South Lexington area property owners, in consultation with the Lexington Transportation Manager.

MDM

- *Pre-Tax Transit Pass Sales Program.* Greatland shall require all tenants of the Project to implement a pre-tax transit pass sales program through the MBTA Perq Program or a similar program.

- *Employee Transit Subsidies.* Through lease agreements with new tenants, Greatland will provide sponsorships to reimburse 100% of the cost of monthly T passes and Alewife shuttle trips for employees that qualify.

- *On-Site Showers/Lockers.* The Property's facilities will be outfitted with showers and locker facilities in locations to encourage bicycle commuting and employee exercise programs.

- *Bike Share Program.* As part of the Bike Share program, tenants will have the ability to sign out a bicycle to pick-up lunch, do other local errands, or just enjoy a ride. Multiple sized helmets will be made available. The above referenced amenities will include the on-site shower and changing facility which will be available to support the program. Sufficient on-site area will also be provided to accommodate a public bike share program to the extent the Town identifies and implements such a program, subject to issuance of a release of liability for inclusion of such a facility for public use.

- *Bicycle Storage Facilities.* Bike storage facilities for the project will be provided to include bike racks within the garage or building. The quantity of bikes stored on the racks will be monitored closely on a daily basis to ensure adequate space is available. Greatland is committed to provide additional bike storage as storage and rack occupancy levels increase.

- *Bicycle Network – Waltham Street.* To improve bicycle access in the vicinity of the Project, prior to Site Plan Review, Greatland will provide a pavement marking design plan of Waltham Street similar to the attached "Figure 13, Conceptual Roadway Improvement Plan" prepared by MDM Transportation Consultants, Inc. dated February 5, 2020, that includes two thru-lanes, left hand turning lanes at major driveways and shoulders for bicycle accommodation, starting from the Lexington-Waltham Town line, continuing north beyond the Property, and transitioning to the existing pavement markings approximately 300 feet north of the Project site subject to approval by the Town Engineer.

- *Car Share Service.* As part of this PTDM, Greatland commits to reserving up to three (3) parking spaces for a car sharing service such as ZipCar should a provider opt to place such vehicles on the Property. Car share parking spaces will be located within the Property at a mutually acceptable location to be determined in consultation with the car share provider, recognizing that such vehicles must be accessible by all car share subscribers (whether or not employees of the Property).

- *On-Site Support Services/Amenities.* The Property's facilities will include proposed services and physical amenities in locations that encourage employees to remain on-site for essential services and internalize trip making to the Property including:

    - A "grab and go" food service in the building
    - Employee fitness facility
    - On-site mailboxes
    - On-site FedEx and/or UPS boxes
    - Showers and changing rooms in the building
    - Path connection to the trail system at the adjoining Brookhaven property
    - A bike share program with bicycles available to sign-out by employees

- *Central Listing of Alternative Transportation Services.* As an integral part of this PTDM, Greatland will develop a website to post information regarding area transportation and local businesses. The proponent will also post information regarding its Bike Share program, and if available a public bike share program. Shuttle services and other public transportation routes/schedules will also be posted at the Property. A transportation information kiosk will be placed in a building lobby area that is highly visible to tenant employees and visitors, with materials to be refreshed every quarter or as needed.

- *Transportation Management Events.* To incentivize employee participation in all programs, Greatland is committed to promoting multiple transportation management events (e.g. meetings, promotional events, email bulletins, etc.) throughout the year. Administration of transportation management events for the Property will be the responsibility of the Transportation Coordinator in coordination with the Route 128 Business Council TMA.

- *Town Sponsored Transportation Events.* The Transportation Coordinator will coordinate with the Town's Transportation Manager to promote awareness of Town-sponsored transportation events and programs as may be offered from time to time.

- *Vehicle Charging Stations.* Electric vehicle charging stations/outlets will be provided within the garage for use of employees and visitors. Initially the total number of stations will be set at ten (10) but may be increased over time based on actual use of these stations. Greatland will pre-wire a portion of the garage to facilitate additional charging stations to meet actual demand over time.

- *HOV Parking Spaces.* To incentivize carpooling at the Property, high occupancy vehicle/carpooling spaces will be located in close proximity to the building. These spaces will be reserved for registered carpool groups and will be administered by the Transportation Coordinator for the Property.

MDM

- *Nature Trail Promotion and Wayfinding.* The Property is proximate to an extensive nature trail system that can be accessed from the Amyas Ames Nature Trail on the Brookhaven property to the Western Greenway trails in Lexington and Waltham, located on land owned by the Massachusetts Department of Conservation and Recreation. This trail system is most directly accessed via the adjoining Brookhaven property. Accordingly, Greatland will consult with the Brookhaven property owner to implement a path connection from the Property to the Brookhaven property with appropriate wayfinding signs to encourage employee awareness and use of the nature trail system. Greatland shall tender to the Town for acceptance, a recorded easement to the public to allow for pedestrian access from Waltham Street across the Property to the trail network accessible through the adjoining Brookhaven property (subject to agreement and coordination with Brookhaven). This easement shall be limited to daytime use only and will be properly marked with signage installed and maintained at the Owner's expense. The easement will be subject to the Owner's reasonable rules and regulations so as not to interfere with the use and operation of the Project. Greatland shall not be responsible for improvements or easements on the adjoining Brookhaven property.

- *Enhanced Pedestrian Crossing/Connectivity – Waltham Street.* The existing signalized pedestrian crossing at Waltham Street will be updated and relocated to the proposed southerly Site driveway to facilitate and encourage pedestrian connection to various retail and restaurant outlets in Waltham along Lexington Street and the trail network accessible through the adjoining Brookhaven property (subject to agreement and coordination with Brookhaven). The improved crossing will feature a crossing that meets current ADA requirements and is equipped with a state-of-the-art pedestrian-activated crossing beacon (Rectangular Rapid Flash Beacon/RRFB). Alternatively, and subject to meeting applicable warrants and approval by the Town Engineer, a High Intensity Activated Crosswalk Beacon (HAWK) option may be implemented. The approximate location of the crossing is presented in the attached "Figure 13, Conceptual Roadway Improvement Plan" prepared by MDM Transportation Consultants, Inc. dated February 5, 2020 which location may be amended or modified pending input from the Town Engineer.

- *Bus Stop/Shelter.* A bus stop/shelter along Waltham Street in the vicinity of the southerly driveway will be provided if deemed appropriate by the Town to support shuttle service to/from the Project and/or public transportation along Waltham Street including Lexpress and MBTA. Such facility shall be subject to review and approval of the Town Engineer and consultation with transit providers including Lexpress and the MBTA (if applicable) to ensure ADA compatibility and appropriate sizing.

- *Tenant Manual.* Greatland will provide a tenant manual which will outline information to tenants and employees with respect to the available PTDM programs and to provide contact information for the Transportation Coordinator.

Annual PTDM Monitoring Report

Greatland will prepare an annual PTDM monitoring report for transmittal to the Town's Transportation Manager that identifies the status, participation level and/or inventory of each component of the PTDM program to include the following:

- Summary of property building size, building occupancy/vacancies and employment levels.

- Parking inventory that quantifies the garage and surface parking supply by category including HOV/carpool, handicap accessible, car share spaces, EV charging spaces, and visitor spaces.

- Property tenant employee commuter survey results that summarizes commuting methods and preferences. The tenant employee survey shall be administered on a biennial basis by the Transportation Coordinator to provide an inventory of employee commute distances and methods (drive alone, public transit, carpool, walk/bike and other).

- Status reporting on PTDM mitigation elements:
    - Route 128 Business Council Membership
    - Transportation Coordinator contact information
    - Shuttle Service
    - Participation level in transit subsidy program
    - Bike Share program inventory and participation level
    - Bike space inventory
    - Car Share inventory and coordination efforts
    - Property Website link
    - Summary of transportation management events held at the Property
    - Summary of registered carpool groups at the Property
    - Copy of tenant manual

RECEIVED
DEC 16 2020
LEXINGTON

ARTICLE 42

PROPOSED MOTION

AMEND ZONING MAP AND BYLAW
1050 WALTHAM STREET, LEXINGTON, MA

That the Zoning Map and Bylaw of the Town be amended to create the Preliminary Site Development and Use Plan for the Planned Development District PD-5, consisting of Lot 14 on Town Assessors Map 5, located at 1050 Waltham Street, Lexington, MA, as described below.

PLANNED DEVELOPMENT DISTRICT PD-5

1. **Authority to Establish a Planned Development District**. This Preliminary Site Development and Use Plan ("PSDUP") to establish Planned Development District PD-5 (the "PD-5 District") is prepared under the provisions of §7.3 (Planned Development Districts) of Chapter 135 of the Code of the Town of Lexington (the "Town") as amended (the "Zoning Bylaw"). The Planning Board has published regulations further detailing the process to establish a Planned Development District which are contained in §8.0 (Planned Development Districts) of Chapter 176 of the Code of the Town (the "Planning Board Zoning Regulations").

2. **Description of the PD-5 District**. The PD-5 District consists of Lot 14 on Town Assessors Map 5, located at 1050 Waltham Street, Lexington, MA, which includes approximately 4.97 acres of land.

3. **Zoning Bylaw Applicability**.

This PSDUP shall regulate development in the PD-5 District. The standards of this PDSUP may differ from those set forth for other districts under the Zoning Bylaw. Terms used and not otherwise defined herein have the meanings as may be ascribed to them in the Zoning Bylaw. In the event of inconsistency or conflict between the text and Regulatory Plans of this PSDUP and any provisions of the Zoning Bylaw applicable to this Planned Development District, the text and Regulatory Plans of this PSDUP control. Other than the standards, uses and requirements of the PSDUP for this PD-5 District, where this PSDUP is silent with respect to any provision of the Zoning Bylaw, the Zoning Bylaw, as amended from time to time, shall apply to the PD-5 District, unless any such amendment is in conflict with this PSDUP.

4. **PSDUP to be Effective Upon Transfer**. This PSDUP establishes the zoning for the PD-5 District, and any successors and assigns in interest in the land within the PD-5 District are bound to the terms and conditions of this PSDUP.

5. **Plans and Documents**.

   5.1. Regulatory Material. In the event of conflict or inconsistency between the text of this PSDUP and the plans and documents incorporated by reference within it, the text of this PSDUP controls. Per §7.3.2.4 of the Zoning Bylaw, the vote of the Town Meeting shall refer to the PSDUP, which shall be considered part of the rezoning action. The following plan set titled "1050 Waltham Street, Planned Development District PD-5, Preliminary Site Development and Use Plan (PSDUP), Regulatory Plan Set" and dated March 11, 2020 (the "Regulatory Plans"), is incorporated herein as Appendix A and made part of this PSDUP:

Regulatory Plans	By
1. Title Sheet	VHB Engineering
2. Property Rights and Dimensional Standards Plan C100	VHB Engineering
3. Site Construction Plan C200	VHB Engineering
4. Landscape Plan L100	IBI Placemaking
5. Site Sections A101	SGA Architecture
6. Building Elevations A201	SGA Architecture
7. Building Elevations A202	SGA Architecture
8. Garage Elevations AG-201	SGA Architecture

5.2. Non-Regulatory Material. Per §8.6 (Non-regulatory Information) of the Planning Board Zoning Regulations, all parts of the PSDUP application submitted and not included in Section 5.1 above, if any, are considered explanations, background information, and justification for the rezoning. The complete PSDUP application is on file with the Town Planning Office.

6. **Permitted Uses**.

6.1. Principal Uses. All of the following uses or any combination thereof are permitted in the PD-5 District, subject to and consistent with the dimensional, zoning and other standards provided in this PSDUP:

a. Institutional Uses
   (i) Child care center
   (ii) Use of land or structures for religious purposes
   (iii) Use of land or structures for educational purposes on land owned or leased by the Commonwealth or its agencies, subdivisions or bodies politic or by a religious sect or denomination or by a non-profit educational corporation
   (iv) Park, playground

b. Agricultural and Natural Resource Uses
   (i) Exempt agricultural uses and structures as set forth in M.G.L. c. 40A §3

c. Office Uses
   (i) Medical, dental, psychiatric office, but not a clinic
   (ii) Medical, dental, psychiatric office, but not a clinic, with related laboratory
   (iii) Business or professional office

d. Personal, Business or General Service Uses
   (i) Medical clinic for outpatient services
   (ii) School not exempt by statute
   (iii) Nonprofit community service center or charitable organization

e. Manufacturing Uses

(i) Light manufacturing
(ii) Laboratory engaged in research, experimental and testing activities, which may include the development of mock-ups and prototypes
(iii) Manufacturing in the fields of biotechnology, medical, pharmaceutical, physical, biological and behavioral sciences and technology, environmental science, toxicology, genetic engineering, comparative medicine, bioengineering, cell biology, human and animal nutrition including the production of equipment, apparatus, machines and devices for research, development, manufacturing and advance and practical application in any such field or area, and including, office, administrative and support facilities related to any of the foregoing activities; all uses must comply with applicable federal, state and local laws, regulations and ordinances including, without limitation, laws, regulations and ordinances governing air pollution, water pollution control, noise and illumination

f. Utilities, Communications and Transportation Uses
(i) Radio, television studio, but without transmitting or receiving towers
(ii) Concealed wireless communication facility, as permitted pursuant to §6.4.4 (Facilities Permitted by Right) of the Zoning Bylaw.
(iii) Essential services

g. Temporary Uses
(i) Temporary building or trailer incidental to the construction of buildings or land development
(ii) Temporary structures and uses not otherwise permitted in the district, provided the Building Commissioner finds that the proposed structure or use is compatible with the neighborhood

The general Operating Standards and Development Standards set forth in §E of Table 1 of §3.4 (Permitted Uses) of the Zoning Bylaw shall not apply.

6.2. Accessory Uses. The limit and size of accessory uses set forth in §3.2.2 of the Zoning Bylaw do not apply. All accessory uses or structures customary and incidental to the principal uses or structures included in Section 6.1 above (which principal uses are also permitted as accessory uses), §3.2.1 of the Zoning Bylaw, and the accessory uses in Section 6.2 hereunder are permitted as accessory uses:

(i) Convenience goods often bought on a daily basis such as food, candy, newspapers, etc., and other retail goods such as books, stationery, drugs, sporting goods, jewelry, photographic equipment and supplies, flowers, novelties, cards, footwear, and the like which are typically of a size that a customer can carry by hand
(ii) Cafeterias, cafes, dining rooms, outdoor food trucks, conference rooms, function rooms, auditoriums, public meeting rooms, community space and recreational facilities
(iii) Beauty parlor, barber shop, laundry or dry-cleaning pickup station with processing done elsewhere, self-service laundromat, tailor, dressmaker, shoe repair, bank or credit union, automatic teller machine, travel agency, ticket agency, photocopying, reproduction services
(iv) Fitness center, athletic and exercise facilities, health and wellness studio
(v) Solar energy systems

7. **Dimensional Standards**. §7.3.2.1 of the Zoning Bylaw provides that a Planned Development District does not have predetermined standards for development, and Table 2 of §4.1.1 (Schedule of Dimensional Controls) of the Zoning Bylaw does not contain standards that apply to a Planned Development District. The following are the only dimensional controls that apply to the PD-5 District, and §4 (Dimensional Controls) of the Zoning Bylaw do not apply.

	Required
Minimum Lot Area	30,000 square feet
Minimum Lot Frontage	175 feet
Minimum Front Yard Setback	30 feet
Minimum Side Yard Setback	20 feet
Minimum Rear Yard Setback	20 feet
Maximum Nonresidential Floor Area Ratio	0.75
Maximum Site Coverage	50%
Maximum Building Height	55 feet
Maximum Height of Rooftop Structures	80 feet
Minimum Landscaped Screening Area Adjacent to PD-1	10 feet

Notes:

7.1. The Planning Board may grant a special permit to exceed the maximum height in feet or the percentage of horizontal coverage of Rooftop Structures erected on a building or structure allowed by this Section 7 Dimensional Standards provided it makes a determination that the structure is compatible with the scale of the neighborhood and does not negatively impact the solar access of any adjoining lot.

7.2. The PD-5 District is a portion of a larger, single parcel that also includes 0.21 acres of land located in the City of Waltham, at 1111R Lexington Street, Waltham, MA. In accordance with §4.1.3 (Lots Located in More than One Municipality) of the Zoning Bylaw, the adjoining land in Waltham shall not be included for purposes of determining compliance of improvements within the PD-5 District with the above Dimensional Controls (e.g. only the land located in Lexington shall be considered the "developable site area" used in determining the Floor Area Ratio). Notwithstanding the foregoing, there shall be no Minimum Side Yard Setback requirement applicable to that portion of the PD-5 District that directly abuts land in located in the City of Waltham.

7.3 The height of a building in the PD-5 District shall be determined as follows:

The vertical distance between the lower elevation and the upper elevation, where the lower elevation is the mean average finished grade of the building as determined by measuring from the four extreme corners of the building, or in the case of a nonrectangular building, from

reasonable equivalent locations around the perimeter of the building, and the upper elevation is the highest point of any ridge, gable, or other roof surface, excluding parapet walls.

7.4 Rooftop Structures shall mean any structures erected on a building, such as but not limited to air and exhaust equipment, chimneys, heating-ventilating or air-conditioning equipment, solar energy systems, stair towers, elevator housings, parapet walls for buildings and garages, antennas, skylights, cupolas, spires, mechanical and acoustical screening and the like ("Rooftop Structures"), which may exceed the maximum height of a building in feet to the limits set forth in the table above, provided that the total horizontal coverage of such Rooftop Structures (excluding solar energy systems) on the building or parking garage structure does not exceed sixty (60) percent of the total roof area.

7.5 Where used, the calculation of Net Floor Area in the PD-5 District is determined by using 80% of the Gross Floor Area exclusive of the Gross Floor Area of areas used for parking and loading (which includes garages and other structured parking).

8. **SPGA**. The Special Permit Granting Authority ("SPGA") as designated in the Zoning Bylaw or where referred to herein is the Planning Board.

9. **Other Zoning Provisions**.

9.1. Landscaping, Transition and Screening. The Landscape Plan, submitted as part of the Regulatory Plans depicts the detailed landscaping for the PD-5 District. The standards of §5.3 (Landscaping, Transition and Screening) of the Zoning Bylaw, do not apply except that the provisions of §5.3.1 (Purpose), §5.3.3 (Landscaping Plan Required), §5.3.11 (Maintenance), §5.3.13 (Screening of Other Uses within the Lots), and §5.3.15 (Special Permit) apply. As reflected on the Landscape Plan, a natural or landscaped screening area of not less than 10 feet in depth or width shall be provided within the PD-5 adjacent to the adjoining PD-1 District consisting of any combination of natural vegetation and supplemental landscaping which area may include fences, walkways, walls and/or berms designed to provide an effective year-round visual screen in this location at grade at the time of installation. This natural or landscaped screening area shall not include parking, driveways, above-ground utilities or building-related appurtenances. The type of supplemental plant materials provided in this landscaped screening area shall be in accordance with those specified in the Landscape Plan. The SPGA may by Special Permit waive any provision of this Section 9.1 of the PSPUD text where it determines that such a waiver would be consistent with the objectives set forth in §5.1.1 (Purpose) of the Zoning Code and would not result in substantial detriment to the surrounding neighborhood.

9.2. Traffic Standards. This PSDUP relies on findings in the Traffic Impact and Access Study for the PD-5 District and will be subject to the traffic demand management policies therein. The provisions of §5.5 (Traffic Standards) of the Zoning Bylaw do not apply to the PD-5 District.

9.3. Off-Street Parking and Loading. For the PD-5 District, the standards of §5.1 (Off-street Parking and Loading) of the Zoning Bylaw do not apply except for the following:

a. The objectives of §5.1.1 (Purpose) of the Zoning Bylaw apply.
b. The provisions of §5.1.3 (Parking Plan), §5.1.7 (Preferential Rideshare Parking), §5.1.8 (Bicycle Parking Facilities), §5.1.10 (Driveways), and §5.1.14 (Special Permit) of the Zoning Bylaw shall apply with respect to modifying the PSDUP provisions herein regarding off-street parking and loading.

c. Calculation of required off-street parking spaces and calculation of required loading bays in the PD-5 District must be provided in compliance with §5.1.4, §5.1.5 and §5.1.6 of the Zoning Bylaw, with the exception of the following requirements, which shall supersede any other applicable requirements of the Zoning Bylaw:

TYPE OF PRINCIPAL USE Note: parking will not be required for accessory uses.	**PARKING FACTOR** *(minimum number of parking spaces to be provided)*
OFFICE USES	
All permitted Office uses (except as otherwise classified)	1 per 333 s.f.
Medical office, out-patient clinic	1 per 200 s.f.
MANUFACTURING/RESEARCH USES	
Manufacturing, research laboratory	1 per 500 s.f.
Construction, storage, distribution and industrial service users	1 per 1,000 s.f.
All other permitted uses	As needed

9.4. Additional Parking Provisions.

a. Maximum Parking. There shall be a maximum of 475 parking spaces in the PD-5 District.

b. No required setbacks apply to side and rear lot lines in the PD-5 District for the paved parts of parking spaces, driveways or maneuvering aisles (which may extend up to the side and rear lot lines), except for where a landscaped screening area is required pursuant to §9.1.

c. Temporary Off-site Parking during Construction. During construction within the PD-5 District, the owner, tenants and other users within the PD-5 District are allowed to park offsite as reasonably needed.

9.5. Signs. The PD-5 District is subject to the Regulatory Plans submitted herewith. The standards of §5.2 (Signs) of the Zoning Bylaw do not apply except for the following:

a. The objectives of §5.2.1 (Purpose) of the Zoning Bylaw apply.
b. The provisions of §5.2.3 (Exemptions) of the Zoning Bylaw apply.
c. The provisions of §5.2.4 (General Regulations) of the Zoning Bylaw apply.
d. The provisions of §5.2.5 (Prohibited Signs) apply.
e. The provisions of §5.2.8 (Commercial Districts) of the Zoning Bylaw do not apply. Instead, a maximum of: a) one principal wall sign (that conforms to the requirements of §5.2.8.1 (f-g) of the Zoning Bylaw) per building, not including parking structures, that is no more than twelve feet in width and eight feet in height, b) one secondary wall sign that also conforms to the above requirements but not to exceed six feet in width and four feet in height and c) one standing sign per driveway curb cut as reflected in the PSDUP that is no more than (i) six feet in height and seventy five square feet in area, shall be permitted

by right. In addition, one directory sign conforming to §5.2.8.1(e) of the Zoning Bylaw shall be permitted per building entrance. All new or relocated wall, standing or projecting signs in the PD-5 District that conform with these requirements shall be subject to minor site plan review by the Planning Director as the Planning Board's designee pursuant to §9.5.4 of the Zoning Bylaw.

f. The Planning Board may, in the course of Site Plan Review, waive any provision of this §9.5 of the PSPUD text where it determines that such a waiver would be consistent with the objectives set forth in §5.1.1 (Purpose) of the Zoning Bylaw and would not result in substantial detriment to the surrounding neighborhood.

Any wall sign, free standing sign or other legally permitted sign presently existing on within the PD-5 District as of the submission date of the PSDUP is allowed as-of-right and may be retained and relocated within the PD-5 District, so long as it is not enlarged unless permitted by the Zoning Bylaw.

9.6. Illumination. The provisions of §5.4 (Outdoor Lighting) of the Zoning Bylaw apply.

10. **Special Conditions**.

10.1. Traffic Mitigation and Traffic Demand Management. As a condition to issuance of a certificate of occupancy, the Traffic Mitigation and Traffic Demand Management measures described in the Parking and Traffic Demand Management Plan incorporated herein and attached hereto as Appendix B shall be satisfied.

APPENDIX A
TO PSDUP FOR THE PD-5 DISTRICT
REGULATORY PLANS

[Under separate cover]

Regulatory Plans

Issued for	Preliminary Site Development and Use Plan (PSDUP)
Date Issued	December 19, 2019
Latest Issue	March 11, 2020

1050 Waltham Street Planned Development District PD-5

Lexington, Massachusetts

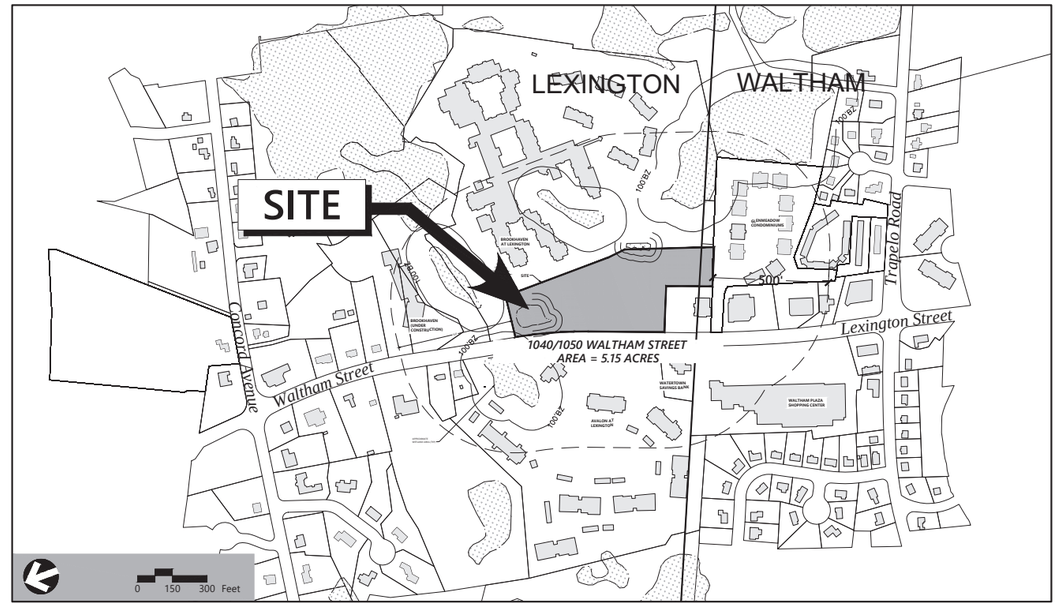

Owner/Applicant

BH GRP 1050 Waltham Owner LLC
c/o Greatland Realty Partners
101 Federal Street, 16th Floor
Boston, MA 02110

Sheet Index

No.	Drawing Title	Latest Issue
C100	Property Rights and Dimensional Standards Plan	March 11, 2020
C200	Site Construction Plan	March 11, 2020
L100	Landscape Plan	March 11, 2020
A101	Site Sections	March 11, 2020
A201	Building Elevations	March 11, 2020
A202	Building Elevations	March 11, 2020
AG201	Garage Elevations	March 11, 2020

Assessor's Map: BK 12196; PG 519
BK 14115; PG 10
Lot: MAP 5 LOT 14

vhb.com

101 Walnut Street
PO Box 9151
Watertown, MA 02471
617.924.1770

Surveyor
BSC Group
803 Summer Street
Boston, MA 02127

Architect
SGA
200 High Street #2
Boston, MA 02110

Engineer
VHB
101 Walnut Street
PO Box 9151
Watertown, MA 02471

Landscape Architect
IBI Placemaking
21 Custom House Street
Third Floor
Boston, MA 02110

\\VHBGBL\PROJ\WAT-LD\14699.00\CAD\LD\PLANSET\REGULATORY\1050 WALTHAM ST - COV 10 March 2020

VHB Project : 14699.00 - 1050 Waltham Street
Issued for : PSDUP Submission - 2/5/2020

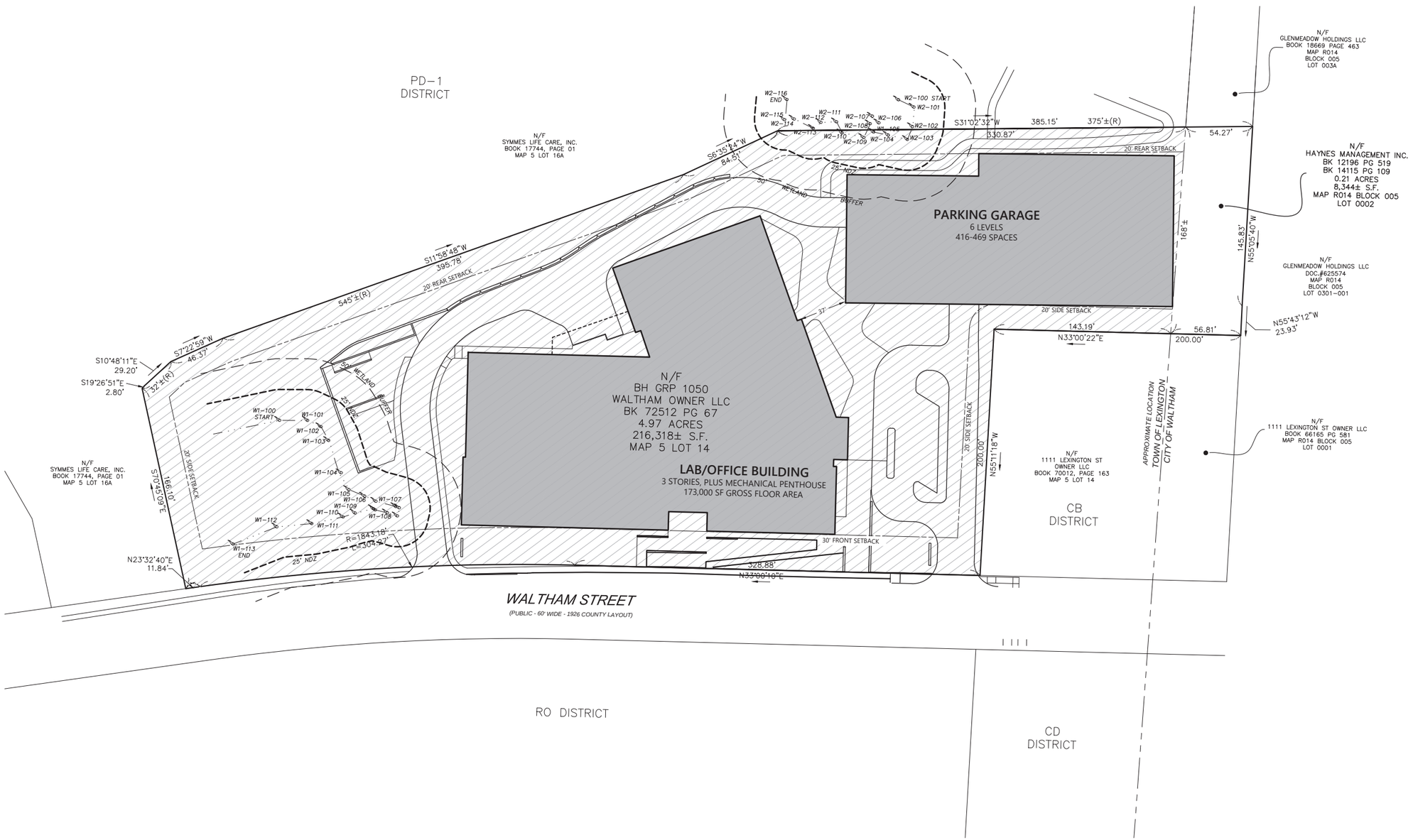

KEY

- PROPOSED PD-5 DISTRICT
- PROPOSED BUILDING

NOTE

1) 20' SIDE YARD SETBACK DOES NOT APPLY TO TOWN LINE.

0 20 40 80 Feet

1050 Waltham Street Planned Development District PD-5

Lexington, Massachusetts

No.	Revision	Date	Apprvd.
1	Revised to Address Comments	12/19/2019	
2	Revised to Address Comments	2/5/2020	
3	Final PSDUP	3/11/2020	

Designed by | Checked by

Issued for | Date

Regulatory Plans — Nov. 26, 2019
Sketch Plan Submission
Not Approved for Construction

Drawing Title

Property Rights and Dimensional Standards Plan

Drawing Number

C100

Sheet 1 of 2

Project Number

14669.00

vhb.com
101 Walnut Street
PO Box 9151
Watertown, MA 02471
617.924.1770

Parking Summary Chart

Description	Size: Required	Size: Provided	Existing	Minimum Required Spaces [c]: Existing Zoning	Minimum Required Spaces [c]: Proposed Zoning
STANDARD SPACES	9 x 18	9 x 18	230	542	407
COMPACT SPACES (33% MAX ALLOWED)	9 x 18	9 x 18	0	179	0
STANDARD ACCESSIBLE SPACES [a]	8 x 18	8 x 18	6	10	7
VAN ACCESSIBLE SPACES	8 x 18	8 x 18	0	2	2
TOTAL SPACES [b]			236	554	416

(a) ADA/STATE/LOCAL REQUIREMENTS
(b) THE INITIAL STRIPING PLAN FOR THE PARKING GARAGE WILL BE BASED ON THE MINIMUM REQUIRED SPACES EQUAL TO 1 SPACE PER 333 SF OF NET FLOOR AREA (416 TOTAL SPACES); HOWEVER, BASED ON OCCUPANT REQUIREMENTS, THE NUMBER OF PARKING SPACES MAY BE INCREASED UP TO A MAXIMUM OF 475 TOTAL SPACES FOR DISTRICT PD-5.
(c) 80% OF GROSS FLOOR AREA USED TO CALCULATE THE NET FLOOR AREA
157,000 GSF OF LAB/OFFICE + 16,000 GSF MECHANICAL PENTHOUSE = 173,000 GSF
173,000 GSF * 80% = 138,400 NET SF

Existing Parking Requirements:

OFFICE	138,400 SF	X	1 SPACES	/	250 SF	=	554
			TOTAL PARKING REQUIRED			=	554 SPACES

Proposed Parking Requirements:

OFFICE	138,400 SF	X	1 SPACES	/	333 SF	=	416
			TOTAL PARKING REQUIRED			=	416 SPACES

Loading Requirements

OFFICE USE:

1 LOADING SPACE FOR FIRST 10,000 SF - 60,000 SF
1 LOADING SPACE FOR EACH ADDITIONAL 100,000 SF

138,400 NET SF PROPOSED OFFICE SPACE:
(138,400 SF - 60,000 SF) / 100,000 SF = 1.78 REQUIRED LOADING SPACES

* LOADING BAYS TO BE A MINIMUM OF 30 FEET LONG, 12 FEET WIDE, AND 14 FEET HIGH

Table Of Development Data

Existing Zoning District: Commercial - Local Office (CLO)

Proposed Zoning District: Planned Development District PD-5

Zoning Regulation Requirements	Site Areas	Existing Zoning[1]	Proposed Zoning
MINIMUM LOT AREA		30,000 SF	30,000 SF
MINIMUM FRONTAGE		175.0 Feet	175.0 Feet
FRONT YARD SETBACK		50 Feet	30.0 Feet
SIDE YARD SETBACK		30 Feet	20.0 Feet
REAR YARD SETBACK		30 Feet	20.0 Feet
TOTAL WETLAND AREA	10,286 SF	N/A	
TOTAL LEXINGTON AREA	216,318 SF	N/A	
DEVELOPABLE SITE AREA[2]	206,032 SF	N/A	
MAXIMUM FLOOR AREA RATIO (FAR)[3,4]		0.25	0.75
MAXIMUM BUILDING HEIGHT (FEET)		30 Feet	55 Feet[5]
MAXIMUM HEIGHT OF ROOFTOP STRUCTURES (FEET)		N/A	80 Feet[6]
MAXIMUM BUILDING COVERAGE[7]		20.0 %	50.0%

1) Zoning regulation requirements for CLO District as specified in Chapter 135, Zoning, Section 4.0, Dimensional Controls, in the Town of Lexington's Zoning Bylaws.
2) Developable Site Area is equal to Total Lexington Area minus Total Wetland Area excluding area in Waltham (8,344 SF).
3) Net Floor Area = 157,000 GSF Lab/Office Building + 16,000 GSF Mechanical Penthouse = 173,000 GSF; 173,000 GSF * 0.8 = 138,400 SF; FAR = Net Floor Area / Total Developable Site Area
4) FAR calculation excludes structured parking garage gross floor area (parking garage gross floor area = approximately 164,400 gsf)
5) The height of a building in the PD-5 District shall be determined as follows: The vertical distance between the lower elevation and the upper elevation, where the lower elevation is the mean average finished grade of the building as determined by measuring from the four extreme corners of the building, or in the case of a nonrectangular building, from reasonable equivalent locations around the perimeter of the building, and the upper elevation is the highest point of any ridge, gable, other roof surface, excluding parapet walls.
6)Rooftop Structures shall mean any structures erected on a building, such as but not limited to air and exhaust equipment, chimneys, heating-ventilating or air-conditioning equipment, solar or photovoltaic panels or canopies, stair towers, elevator housings, parapet walls for buildings and garages, antennas, skylights, cupolas, spires, mechanical and acoustical screening and the like ("Rooftop Structures"), which may exceed the maximum height of a building in feet to the limits set forth above provided that the total horizontal coverage of such Rooftop Structures (excluding solar or photovoltaic panels or canopies) on the building or parking garage structure does not exceed sixty (60) percent of the total roof area.
7) Maximum Building Coverage includes Lab/Office Building and Parking Garage coverage

vhb.com

101 Walnut Street
PO Box 9151
Watertown, MA 02471
617.924.1770

NOTES

1) Proposed landscaping shown on Sheet L100
2) The limit of work and amount of earth material to be removed added or reused shall be quantified and provided to the Town for Site Plan Approval

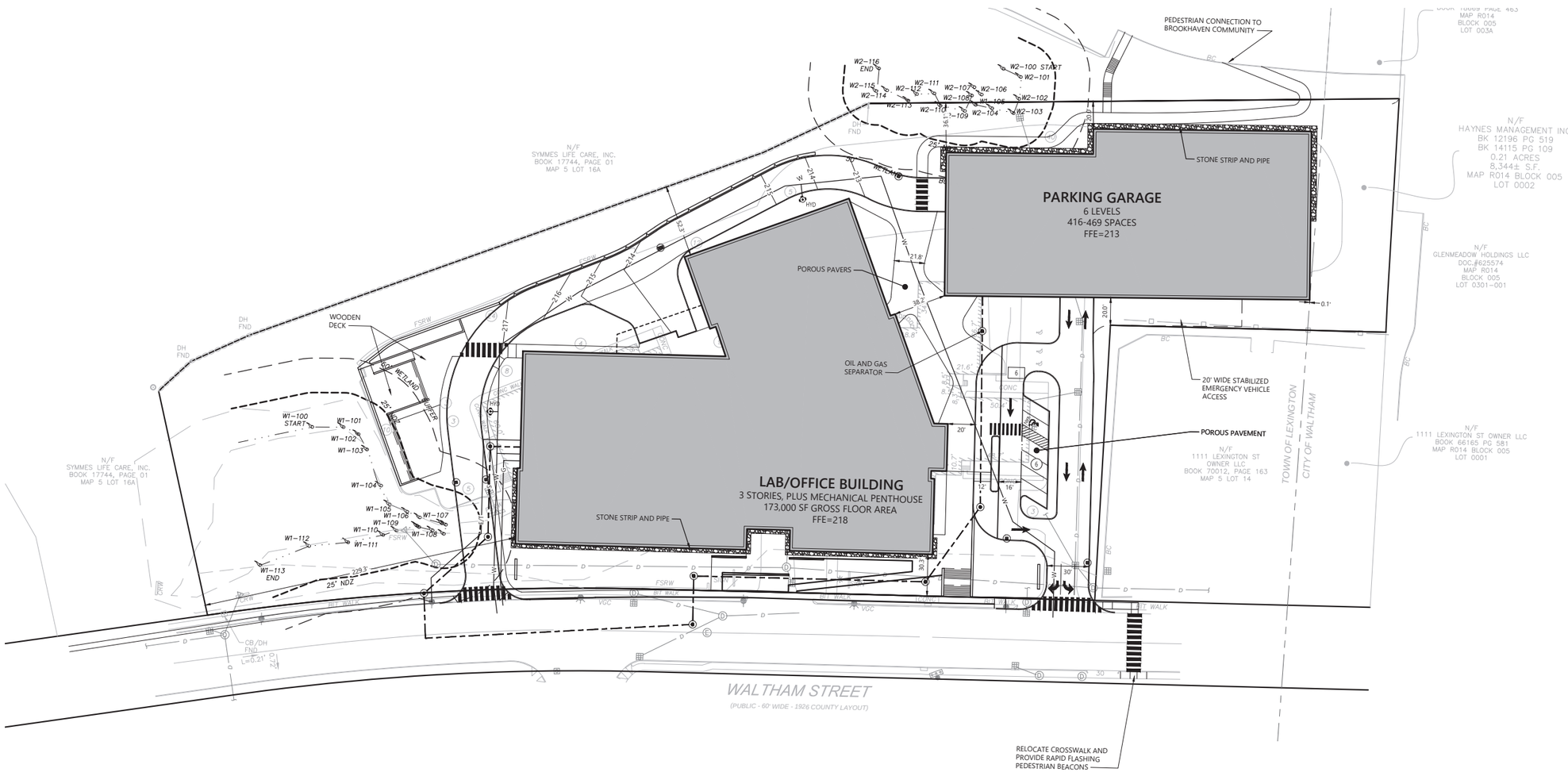

0 20 40 80 Feet

1050 Waltham Street Planned Development District PD-5

Lexington, Massachusetts

No.	Revision	Date	Apprvd.
1	Revised to Address Comments	12/19/2019	
2	Revised to Address Comments	2/5/2020	
3	Final PSDUP	3/11/2020	

Designed by | Checked by

Issued for: Regulatory Plans, Sketch Plan Submission, Not Approved for Construction
Date: Nov. 26, 2019

Drawing Title: Site Construction Plan

Drawing Number: C200

Sheet 2 of 2

Project Number: 14669.00

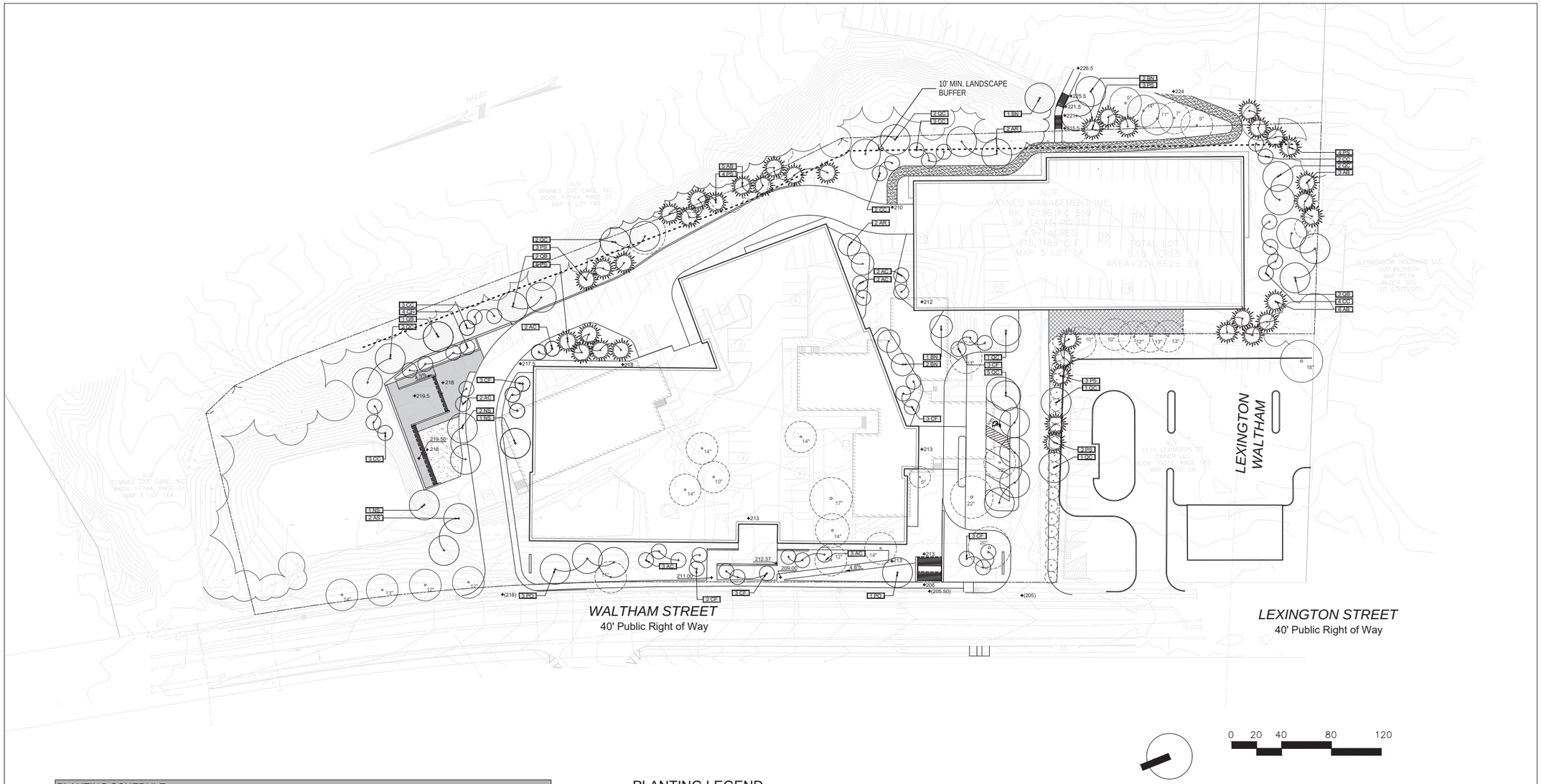

PLANTING SCHEDULE

TAB	QUANTITY	BOTANICAL NAME	COMMON NAME	SIZE	SPACING
DECIDUOUS TREES					
AR	4	Acer rubrum	Red Maple	4-4.5" CAL.	B&B
AS	2	Acer saccharinum	Silver Maple	4-4.5" CAL.	B&B
BN	6	Betula nigra	River Birch	4-4.5" CAL.	B&B
PO	4	Platanus occidentalis	Plane tree	4-4.5" CAL.	B&B
NS	4	*Nyssa sylvatica*	Tupelo	4-4.5" CAL.	B&B
QB	6	Quercus bicolor	Swamp White Oak	4-4.5" CAL.	B&B
QC	16	Quercus coccinea	Scarlet Oak	4-4.5" CAL.	B&B
EVERGREEN TREES					
AB	14	Abies balsamea	Balsam Fir	10'-12' HT.	B&B
PS	24	Pinus strobus	Eastern White Pine	10'-12' HT.	B&B
ORNAMENTAL TREES					
AC	14	*Amelanchier canadensis*	Serviceberry	8'-10' HT.	B&B
CF	21	*Cornus florida*	Redbud	3.5" CAL	B&B
CC	17	*Crataegus mollis*	Downy Hawthorn	3.5" CAL	B&B

PLANTING LEGEND

- EXISTING TREE TO BE REMOVED
- EXISTING TREE / TREE LINE TO REMAIN
- DECIDUOUS TREE
- EVERGREEN TREE
- ORNAMENTAL TREE

SGA
200 HIGH ST, BOSTON, MA, 02110
857.300.2610 | SGA-ARCH.COM

PROJECT TEAM:

CLIENT
GREATLAND REALTY PARTNERS
101 Federal Street, 16th Floor
Boston, MA 02110
857.209.8202

CIVIL
VANASSE HANGEN BRUSTLIN INC.
99 High Street, #10
Boston, MA 02110
617.728.7777

LANDSCAPE
IBI PLACEMAKING
21 Custom House Street, 3rd Floor
Boston, MA 02110
617.896.2500

TRANSPORTATION
MDM TRANSPORTATION CONSULTANTS
28 Lord Road
Marlborough, MA 01752
508.303.0370

SEAL / SIGNATURE

© Spagnolo Gisness & Associates, Inc.
12/19/2019

1050 WALTHAM STREET

PLANNED DEVELOPMENT DISTRICT PD-5

PRELIMINARY SITE DEVELOPMENT AND USE PLAN (PSDUP)

REVISIONS:

No.	Date	Description

SUBMISSIONS:

Date	Issued For:
12/19/2019	Preliminary Site Development and Use Plan (PSDUP)
03/11/2020	PSDUP

SCALE	**1" = 40'-0"**
DATE ISSUED	**03/11/2020**
PROJECT NO	**123511**
DRAWN BY	**SL**
CHECKED BY	**SW**

SHEET TITLE:

Landscape Plan

L100

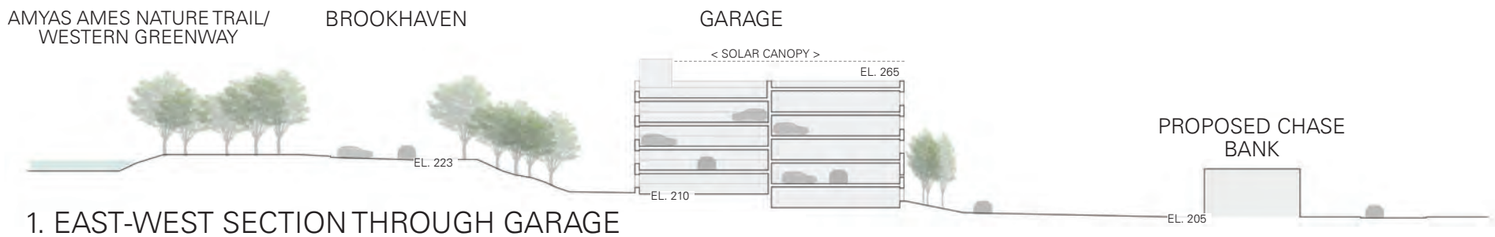

1. EAST-WEST SECTION THROUGH GARAGE

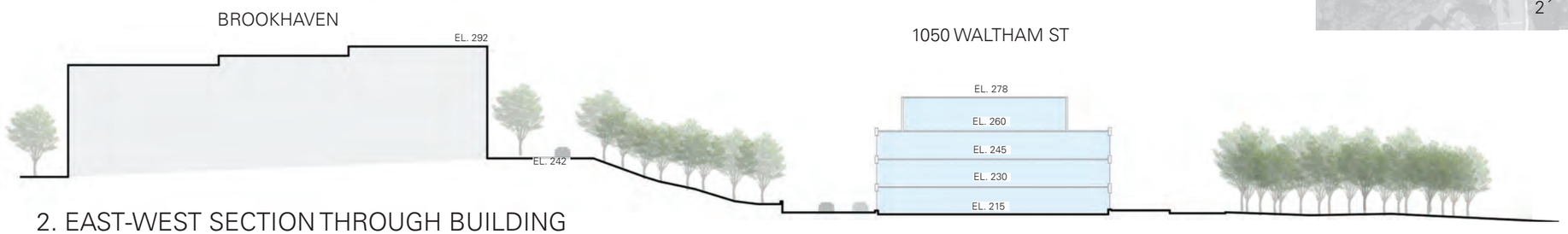

2. EAST-WEST SECTION THROUGH BUILDING

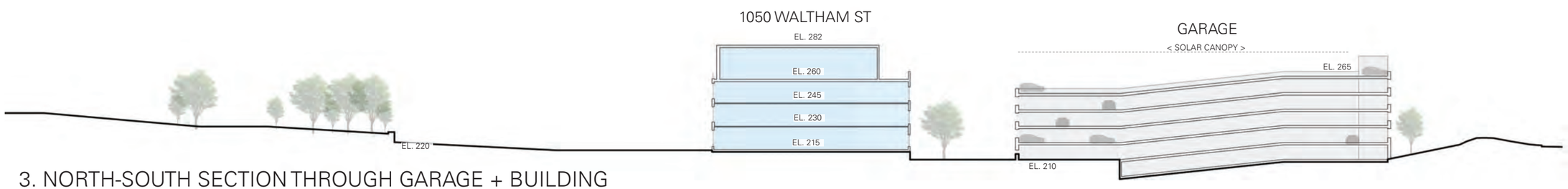

3. NORTH-SOUTH SECTION THROUGH GARAGE + BUILDING

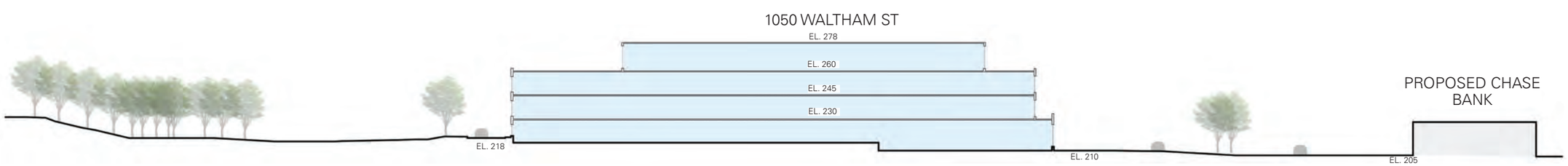

4. NORTH-SOUTH SECTION THROUGH BUILDING

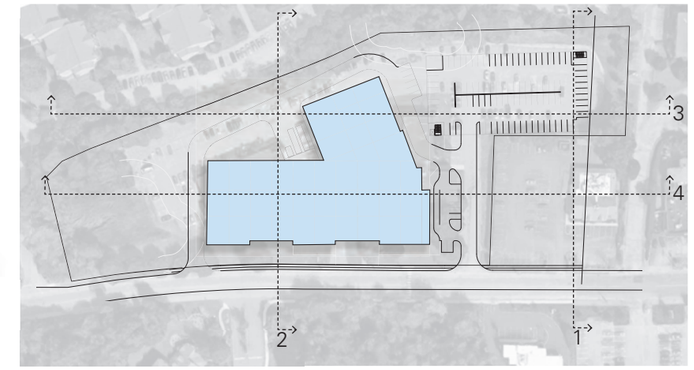

SGA
200 HIGH ST, BOSTON, MA, 02110
857.300.2610 | SGA-ARCH.COM

PROJECT TEAM:

CLIENT
GREATLAND REALTY PARTNERS

101 Federal Street, 16th Floor
Boston, MA 02110
857.209.8202

CIVIL
VANASSE HANGEN BRUSTLIN INC.
99 High Street, #10
Boston, MA 02110
617.728.7777

LANDSCAPE
IBI PLACEMAKING

21 Custom House Street, 3rd Floor
Boston, MA 02110
617.896.2500

TRANSPORTATION
MDM TRANSPORTATION CONSULTANTS
28 Lord Road
Marlborough, MA 01752
508.303.0370

SEAL / SIGNATURE

© Spagnolo Gisness & Associates, Inc.
03/11/2020

1050 WALTHAM STREET

PLANNED DEVELOPMENT DISTRICT PD-5

PRELIMINARY SITE DEVELOPMENT AND USE PLAN (PSDUP)

REVISIONS:

No.	Date	Description

SUBMISSIONS:

Date	
12/19/2019	Preliminary Site Development and Use Plan (PSDUP)
03/11/2020	PSDUP

SCALE
DATE ISSUED **03/11/2020**
PROJECT NO **4813.00**
DRAWN BY **Author**
CHECKED BY **Checker**

SHEET TITLE:

Site Sections

A101

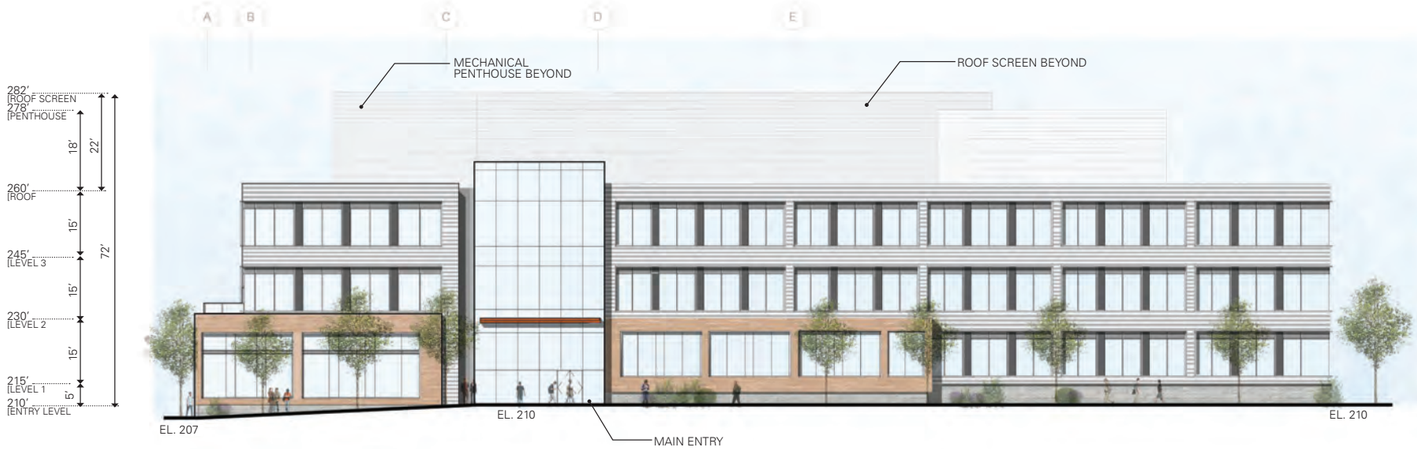

SOUTH ELEVATION

WEST ELEVATION

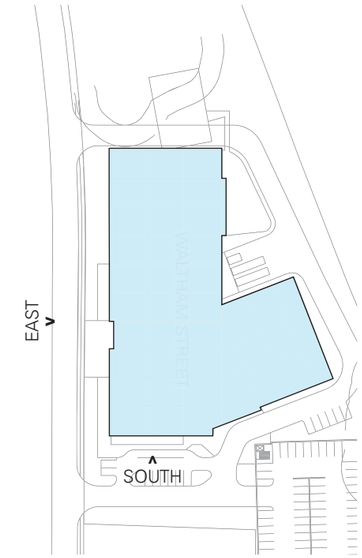

SGA
200 HIGH ST, BOSTON, MA, 02110
857.300.2610 | SGA-ARCH.COM

PROJECT TEAM:

CLIENT
GREATLAND REALTY PARTNERS

101 Federal Street, 16th Floor
Boston, MA 02110
857.209.8202

CIVIL
VANASSE HANGEN BRUSTLIN INC.
99 High Street, #10
Boston, MA 02110
617.728.7777

LANDSCAPE
IBI PLACEMAKING

21 Custom House Street, 3rd Floor
Boston, MA 02110
617.896.2500

TRANSPORTATION
MDM TRANSPORTATION CONSULTANTS
28 Lord Road
Marlborough, MA 01752
508.303.0370

SEAL / SIGNATURE

© Spagnolo Gisness & Associates, Inc.
03/11/2020

1050 WALTHAM STREET

PLANNED DEVELOPMENT DISTRICT PD-5

PRELIMINARY SITE DEVELOPMENT AND USE PLAN (PSDUP)

REVISIONS:

No.	Date	Description

SUBMISSIONS:

Date	
12/19/2019	Preliminary Site Development and Use Plan (PSDUP)
03/11/2020	PSDUP

SCALE	**1/16" = 1'-0"**
DATE ISSUED	**03/11/2020**
PROJECT NO	**4813.00**
DRAWN BY	**TS**
CHECKED BY	**KO**

SHEET TITLE:

Building Elevations

A201

NORTH ELEVATION

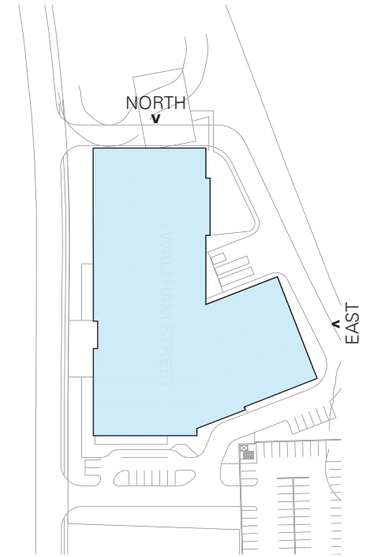

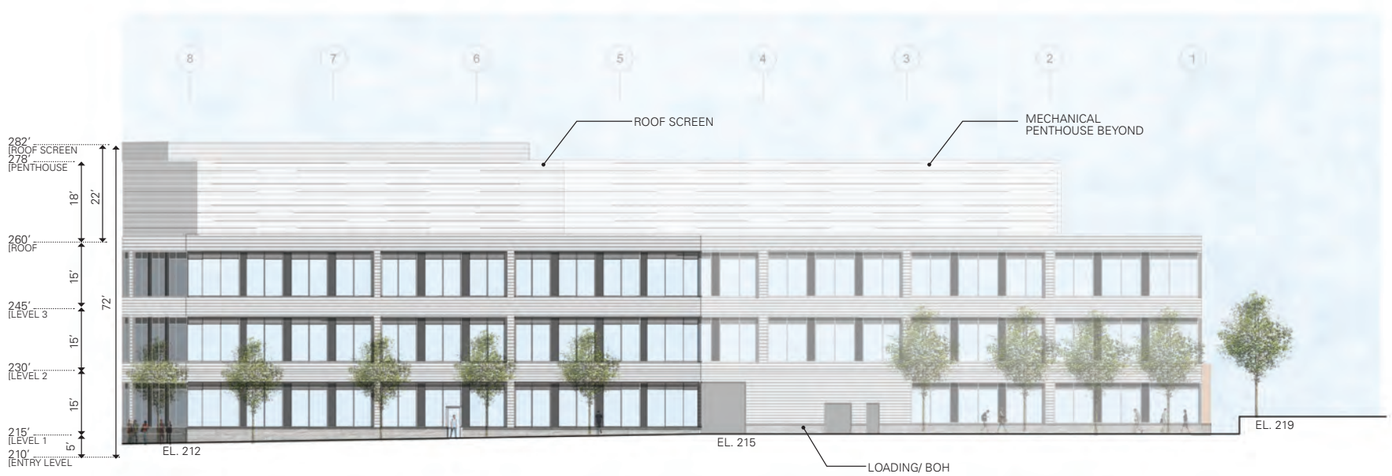

1 EAST ELEVATION

200 HIGH ST, BOSTON, MA, 02110
857.300.2610 | SGA-ARCH.COM

PROJECT TEAM:

CLIENT
GREATLAND REALTY PARTNERS

101 Federal Street, 16th Floor
Boston, MA 02110
857.209.8202

CIVIL
VANASSE HANGEN BRUSTLIN INC.
99 High Street, #10
Boston, MA 02110
617.728.7777

LANDSCAPE
IBI PLACEMAKING

21 Custom House Street, 3rd Floor
Boston, MA 02110
617.896.2500

TRANSPORTATION
MDM TRANSPORTATION CONSULTANTS
28 Lord Road
Marlborough, MA 01752
508.303.0370

SEAL / SIGNATURE

© Spagnolo Gisness & Associates, Inc.
03/11/2020

1050 WALTHAM STREET

PLANNED DEVELOPMENT DISTRICT PD-5

PRELIMINARY SITE DEVELOPMENT AND USE PLAN (PSDUP)

REVISIONS:

No.	Date	Description

SUBMISSIONS:

Date	
12/19/2019	Preliminary Site Development and Use Plan (PSDUP)
03/11/2020	PSDUP

SCALE	**1/16" = 1'-0"**
DATE ISSUED	**03/11/2020**
PROJECT NO	**4813.00**
DRAWN BY	**TS**
CHECKED BY	**KO**

SHEET TITLE:

Building Elevations

A202

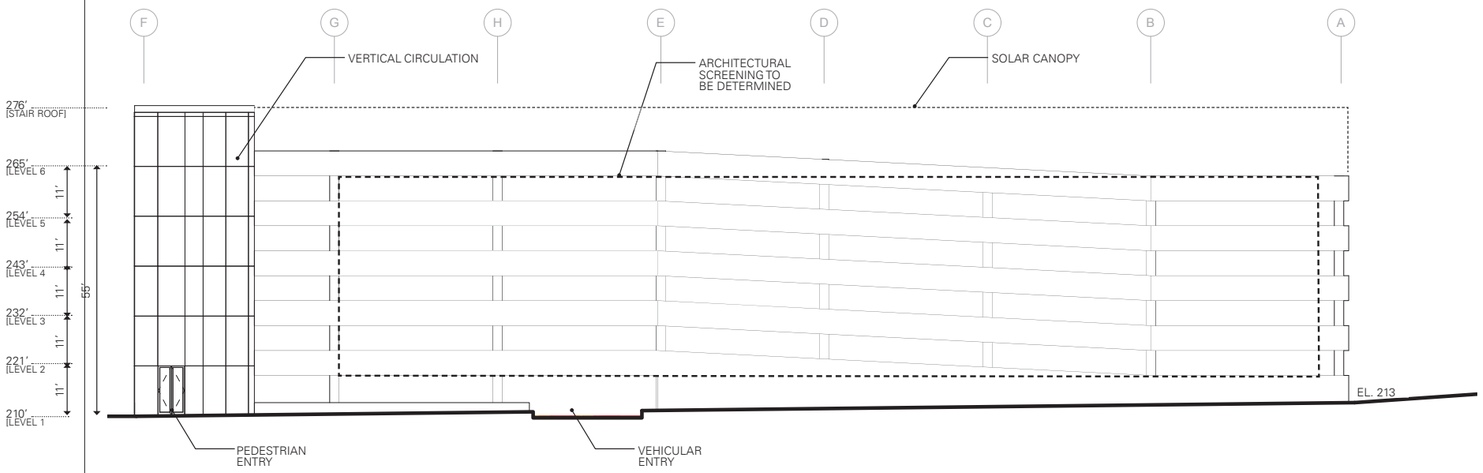

WEST ELEVATION

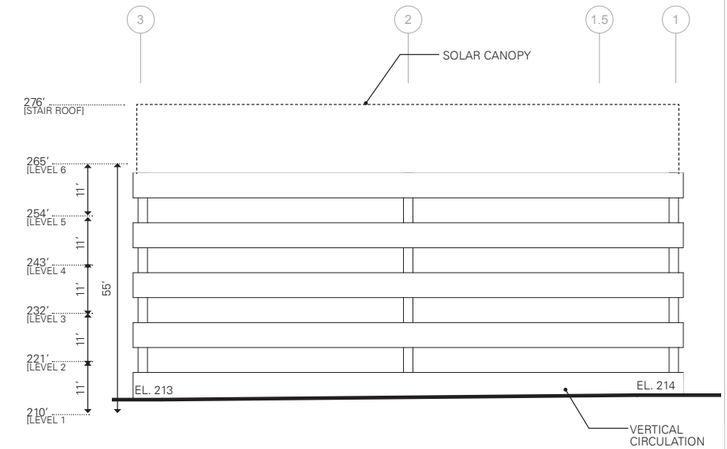

SOUTH ELEVATION

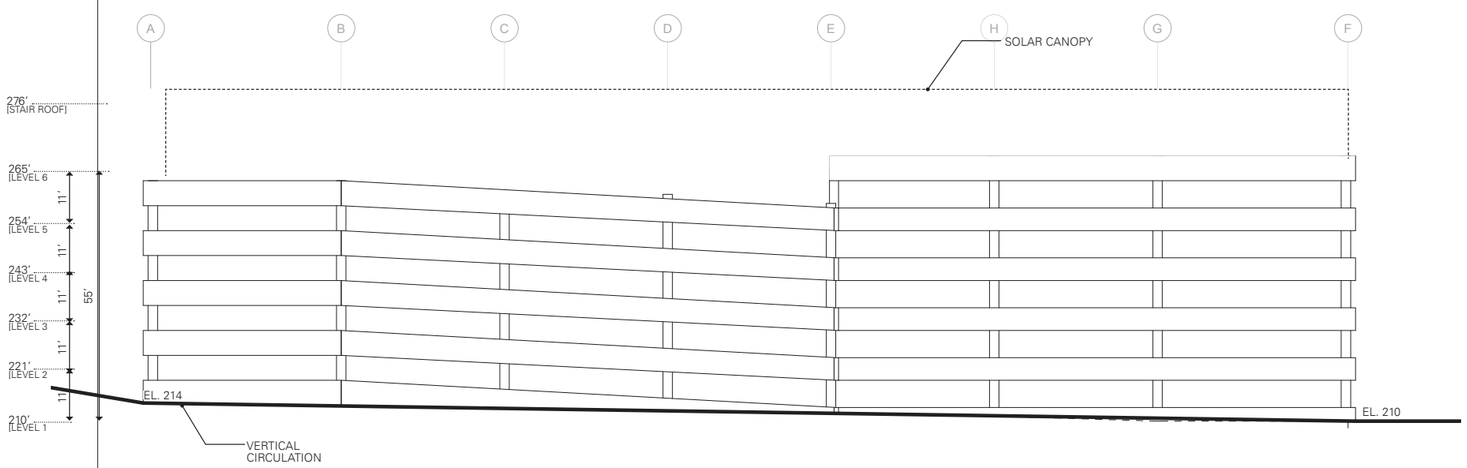

EAST ELEVATION

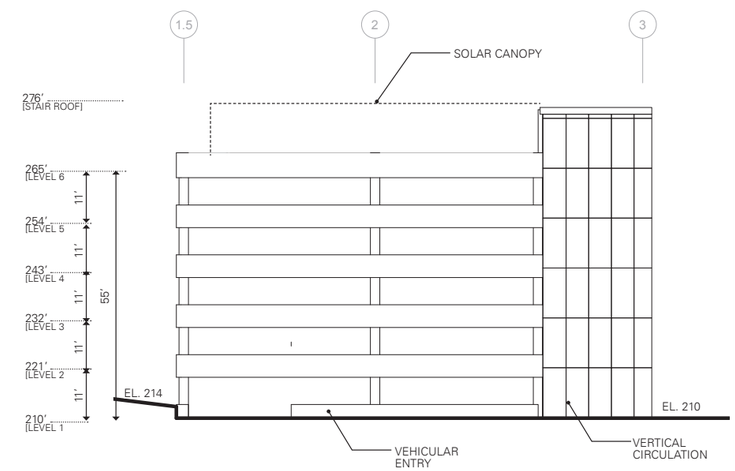

NORTH ELEVATION

200 HIGH ST, BOSTON, MA, 02110
857.300.2610 | SGA-ARCH.COM

PROJECT TEAM:

CLIENT
GREATLAND REALTY PARTNERS

101 Federal Street, 16th Floor
Boston, MA 02110
857.209.8202

CIVIL
VANASSE HANGEN BRUSTLIN INC.
99 High Street, #10
Boston, MA 02110
617.728.7777

LANDSCAPE
IBI PLACEMAKING

21 Custom House Street, 3rd Floor
Boston, MA 02110
617.896.2500

TRANSPORTATION
MDM TRANSPORTATION CONSULTANTS
28 Lord Road
Marlborough, MA 01752
508.303.0370

SEAL / SIGNATURE

© Spagnolo Gisness & Associates, Inc.
03/11/2020

1050 WALTHAM STREET

PLANNED DEVELOPMENT DISTRICT PD-5

PRELIMINARY SITE DEVELOPMENT AND USE PLAN (PSDUP)

REVISIONS:

No.	Date	Description

SUBMISSIONS:

Date	
12/19/2019	Preliminary Site Development and Use Plan (PSDUP)
03/11/2020	PSDUP

SCALE
DATE ISSUED **03/11/2020**
PROJECT NO **4813.00**
DRAWN BY **Author**
CHECKED BY **Checker**

SHEET TITLE:

Garage Elevations

AG-201

APPENDIX B
TO PSDUP FOR THE PD-5 DISTRICT
PARKING AND TRAFFIC DEMAND MANAGEMENT PLAN

[See attached]

PARKING AND TRANSPORATION DEMAND MANAGEMENT

MULTI-TENANT LIFE SCIENCE CENTER

1050 Waltham Street
Lexington, Massachusetts

Prepared for:
Greatland Realty Partners LLC

March 9, 2020

MDM TRANSPORTATION CONSULTANTS, INC.
Planners & Engineers

EXECUTIVE SUMMARY

This report presents an initial draft Parking and Transportation Demand Management (PTDM) program for the proposed multi-tenant life science center located at 1050 Waltham Street in Lexington, MA (The "Property"). The PTDM presented herein is developed in accordance with requirements of Planning Board Zoning Regulations Ch. 176 §9.4.2(6) Major Site Plan Review and provides the basis for subsequent PTDM reporting to the Town.

E.1 PROJECT DESCRIPTION

The existing Site is located at 1040-1050 Waltham Street which includes two general office buildings totaling 68,000± sf and a 236± space surface parking lot. Access is currently provided via two driveways along Waltham Street. Under the proposed programming, the existing office buildings and parking areas will be removed and a new 157,000± sf building will be constructed with on-site parking provided for up to 475± vehicles with a combination of surface spaces and structured parking. Proposed access/egress is proposed via two driveways along Waltham Street at/or near the location of the existing southern driveway and to the north of Lexington Ridge Drive.

E.2 TRIP GENERATION

New traffic generated by the project was estimated using trip rates published in ITE's *Trip Generation*[1] assuming an office use, Land Use Code (LUC) 710 – General Office. While actual tenancy of the Site is expected to principally be research and development and lab space, the use of this land use category for analysis of impact purposes represents a conservatively high trip estimate of likely operations at the Site. Further, no trip credits (reduction) were taken for

[1] *Trip Generation,* 10th Edition; Institute of Transportation Engineers; Washington, DC; 2017.

alternative transportation modes or internal trips between the various on-site uses; actual trip activity is again likely to be lower than estimated assuming implementation of an effective PTDM program for the Site.

Projected trip generation based on unadjusted ITE trip rates and no credit for PTDM programming would result in a total trip generation of approximately 182 trips (157 entering and 25 exiting) during the weekday morning peak hour and 181 trips (29 entering and 152 exiting) during the weekday evening peak hour. On a daily basis the project is estimated to generate approximately 1,530 trips with half entering and half exiting over a 24-hour period.

Relative to existing Site occupancy by 68,000 sf of office use, the proposed (redeveloped) campus results in a net increase of 868 new daily vehicle-trips, 103 vehicle-trips during the weekday AM peak hour and 103 vehicle-trips during the weekday PM peak hour. This scenario represents operations under a development scenario with an all office use of the buildings on the Property.

E.3 PTDM MITIGATION

PTDM policies are to be implemented by the proponent as outlined below that is consistent with the principles outlined in the Town's Transportation Management Overlay District plan. These principles include multimodal consideration and PTDM techniques that are reasonably calculated to reduce the number of vehicle trips generated by a development, and that encourages voluntary participation in PTDM programs by those not required to participate. The PTDM comprises physical elements as well as programmatic elements that include programs and policies cited herein.

The PTDM Plan endeavors to provide equitable access to various transportation modes for campus tenants and visitors as well as offer associated incentives to encourage the use of travel modes that reduce dependency on single occupant vehicle (SOV) use. The Plan seeks to achieve this by incorporating design elements and programs that encourage biking, walking, ride sharing and transit use which include a system of sidewalks that integrate with the pedestrian and bicycle infrastructure along Waltham Street and Lexington Street (Waltham); expands on-site bicycle accommodations including bike parking as well as supporting features such as shower and locker facilities; establishes a bike and car share program; provides a shuttle bus connection to public transit and a transit subsidy program; and offers a participation incentive program that rewards participation in alternative travel modes including vanpools/carpools.

Parking and Transportation Demand Management (PTDM) Commitments

Greatland commits to the following program elements as part of the PTDM for the Property:

- *Route 128 Business Council Membership*. Greatland will join as a paid member of the Route 128 Business Council. This partnership will provide the 1050 Waltham Street tenants with valuable resources including:
    - Carpool matching database
    - Bay State Commute (The Commonwealth's ridematching and rewards program)
    - Alewife Shuttle (subject to extension to Waltham Street/pending)
    - Emergency Ride Home
    - Individual transportation and route planning assistance
    - Bicycle route maps and route planning assistance
    - On-site commuter benefit events
    - On-line trip planning tools

- *Transportation Coordinator*. Greatland will designate a transportation coordinator that communicates with tenant employees through frequent emails, tweets, and building memorandums announcing programs, incentives, reminders, and other useful information intended to decrease single occupancy vehicles (SOV's).

- *Shuttle Services*. Greatland will participate in a sponsorship of the Alewife Shuttle if and to the extent that the service currently serving the Hayden Avenue corridor (Alewife Route A North Shuttle) can be expanded to include 1050 Waltham Street; the feasibility of such extension will be determined through consultation with the Route 128 Business Council. Alternatively, Greatland will collaborate with surrounding property owners to fund a shuttle serving the Waltham Street corridor that provides a connection to the Alewife Station.

- If the Route 128 Business Council shuttle cannot be extended to serve the Project, or another shuttle service cannot be provided to serve the Project in collaboration with surrounding property owners, Greatland will develop a shuttle system unique to the property to provide service to employees from 1050 Waltham Street to the Alewife MBTA Station. Monitoring of shuttle promotion and ridership during this trial period will be conducted daily with reporting to the Town to determine continued viability of the service. At any time in the future in which the operation of this shuttle service is no longer adequately used, Greatland may petition the Select Board to discontinue the shuttle service, at which time, Greatland shall contribute $5,000 per year payable to the Town each July 15th to develop a shared shuttle with other South Lexington area property owners, in consultation with the Lexington Transportation Manager.

- *Pre-Tax Transit Pass Sales Program*. Greatland shall require all tenants of the Project to implement a pre-tax transit pass sales program through the MBTA Perq Program or a similar program.

- *Employee Transit Subsidies*. Through lease agreements with new tenants, Greatland will provide sponsorships to reimburse 100% of the cost of monthly T passes and Alewife shuttle trips for employees that qualify.

- *On-Site Showers/Lockers*. The Property's facilities will be outfitted with showers and locker facilities in locations to encourage bicycle commuting and employee exercise programs.

- *Bike Share Program*. As part of the Bike Share program, tenants will have the ability to sign out a bicycle to pick-up lunch, do other local errands, or just enjoy a ride. Multiple sized helmets will be made available. The above referenced amenities will include the on-site shower and changing facility which will be available to support the program. Sufficient on-site area will also be provided to accommodate a public bike share program to the extent the Town identifies and implements such a program, subject to issuance of a release of liability for inclusion of such a facility for public use.

- *Bicycle Storage Facilities*. Bike storage facilities for the project will be provided to include bike racks within the garage or building. The quantity of bikes stored on the racks will be monitored closely on a daily basis to ensure adequate space is available. Greatland is committed to provide additional bike storage as storage and rack occupancy levels increase.

- *Bicycle Network – Waltham Street.* To improve bicycle access in the vicinity of the Project, prior to Site Plan Review, Greatland will provide a pavement marking design plan of Waltham Street similar to the attached "Figure 13, Conceptual Roadway Improvement Plan" prepared by MDM Transportation Consultants, Inc. dated February 5, 2020, that includes two thru-lanes, left hand turning lanes at major driveways and shoulders for bicycle accommodation, starting from the Lexington-Waltham Town line, continuing north beyond the Property, and transitioning to the existing pavement markings approximately 300 feet north of the Project site subject to approval by the Town Engineer.

- *Car Share Service.* As part of this PTDM, Greatland commits to reserving up to three (3) parking spaces for a car sharing service such as ZipCar should a provider opt to place such vehicles on the Property. Car share parking spaces will be located within the Property at a mutually acceptable location to be determined in consultation with the car share provider, recognizing that such vehicles must be accessible by all car share subscribers (whether or not employees of the Property).

- *On-Site Support Services/Amenities*. The Property's facilities will include proposed services and physical amenities in locations that encourage employees to remain on-site for essential services and internalize trip making to the Property including:

    - A "grab and go" food service in the building
    - Employee fitness facility
    - On-site mailboxes
    - On-site FedEx and/or UPS boxes
    - Showers and changing rooms in the building
    - Path connection to the trail system at the adjoining Brookhaven property
    - A bike share program with bicycles available to sign-out by employees

- *Central Listing of Alternative Transportation Services*. As an integral part of this PTDM, Greatland will develop a website to post information regarding area transportation and local businesses. The proponent will also post information regarding its Bike Share program, and if available a public bike share program. Shuttle services and other public transportation routes/schedules will also be posted at the Property. A transportation information kiosk will be placed in a building lobby area that is highly visible to tenant employees and visitors, with materials to be refreshed every quarter or as needed.

- *Transportation Management Events.* To incentivize employee participation in all programs, Greatland is committed to promoting multiple transportation management events (e.g. meetings, promotional events, email bulletins, etc.) throughout the year. Administration of transportation management events for the Property will be the responsibility of the Transportation Coordinator in coordination with the Route 128 Business Council TMA.

- *Town Sponsored Transportation Events*. The Transportation Coordinator will coordinate with the Town's Transportation Manager to promote awareness of Town-sponsored transportation events and programs as may be offered from time to time.

- *Vehicle Charging Stations.* Electric vehicle charging stations/outlets will be provided within the garage for use of employees and visitors. Initially the total number of stations will be set at ten (10) but may be increased over time based on actual use of these stations. Greatland will pre-wire a portion of the garage to facilitate additional charging stations to meet actual demand over time.

- *HOV Parking Spaces.* To incentivize carpooling at the Property, high occupancy vehicle/carpooling spaces will be located in close proximity to the building. These spaces will be reserved for registered carpool groups and will be administered by the Transportation Coordinator for the Property.

- *Nature Trail Promotion and Wayfinding.* The Property is proximate to an extensive nature trail system that can be accessed from the Amyas Ames Nature Trail on the Brookhaven property to the Western Greenway trails in Lexington and Waltham, located on land owned by the Massachusetts Department of Conservation and Recreation. This trail system is most directly accessed via the adjoining Brookhaven property. Accordingly, Greatland will consult with the Brookhaven property owner to implement a path connection from the Property to the Brookhaven property with appropriate wayfinding signs to encourage employee awareness and use of the nature trail system. Greatland shall tender to the Town for acceptance, a recorded easement to the public to allow for pedestrian access from Waltham Street across the Property to the trail network accessible through the adjoining Brookhaven property (subject to agreement and coordination with Brookhaven). This easement shall be limited to daytime use only and will be properly marked with signage installed and maintained at the Owner's expense. The easement will be subject to the Owner's reasonable rules and regulations so as not to interfere with the use and operation of the Project. Greatland shall not be responsible for improvements or easements on the adjoining Brookhaven property.

- *Enhanced Pedestrian Crossing/Connectivity – Waltham Street.* The existing signalized pedestrian crossing at Waltham Street will be updated and relocated to the proposed southerly Site driveway to facilitate and encourage pedestrian connection to various retail and restaurant outlets in Waltham along Lexington Street and the trail network accessible through the adjoining Brookhaven property (subject to agreement and coordination with Brookhaven). The improved crossing will feature a crossing that meets current ADA requirements and is equipped with a state-of-the-art pedestrian-activated crossing beacon (Rectangular Rapid Flash Beacon/RRFB). Alternatively, and subject to meeting applicable warrants and approval by the Town Engineer, a High Intensity Activated Crosswalk Beacon (HAWK) option may be implemented. The approximate location of the crossing is presented in the attached "Figure 13, Conceptual Roadway Improvement Plan" prepared by MDM Transportation Consultants, Inc. dated February 5, 2020 which location may be amended or modified pending input from the Town Engineer.

- *Bus Stop/Shelter.* A bus stop/shelter along Waltham Street in the vicinity of the southerly driveway will be provided if deemed appropriate by the Town to support shuttle service to/from the Project and/or public transportation along Waltham Street including Lexpress and MBTA. Such facility shall be subject to review and approval of the Town Engineer and consultation with transit providers including Lexpress and the MBTA (if applicable) to ensure ADA compatibility and appropriate sizing.

- *Tenant Manual.* Greatland will provide a tenant manual which will outline information to tenants and employees with respect to the available PTDM programs and to provide contact information for the Transportation Coordinator.

Annual PTDM Monitoring Report

Greatland will prepare an annual PTDM monitoring report for transmittal to the Town's Transportation Manager that identifies the status, participation level and/or inventory of each component of the PTDM program to include the following:

- Summary of property building size, building occupancy/vacancies and employment levels.

- Parking inventory that quantifies the garage and surface parking supply by category including HOV/carpool, handicap accessible, car share spaces, EV charging spaces, and visitor spaces.

- Property tenant employee commuter survey results that summarizes commuting methods and preferences. The tenant employee survey shall be administered on a biennial basis by the Transportation Coordinator to provide an inventory of employee commute distances and methods (drive alone, public transit, carpool, walk/bike and other).

- Status reporting on PTDM mitigation elements:
    - Route 128 Business Council Membership
    - Transportation Coordinator contact information
    - Shuttle Service
    - Participation level in transit subsidy program
    - Bike Share program inventory and participation level
    - Bike space inventory
    - Car Share inventory and coordination efforts
    - Property Website link
    - Summary of transportation management events held at the Property
    - Summary of registered carpool groups at the Property
    - Copy of tenant manual

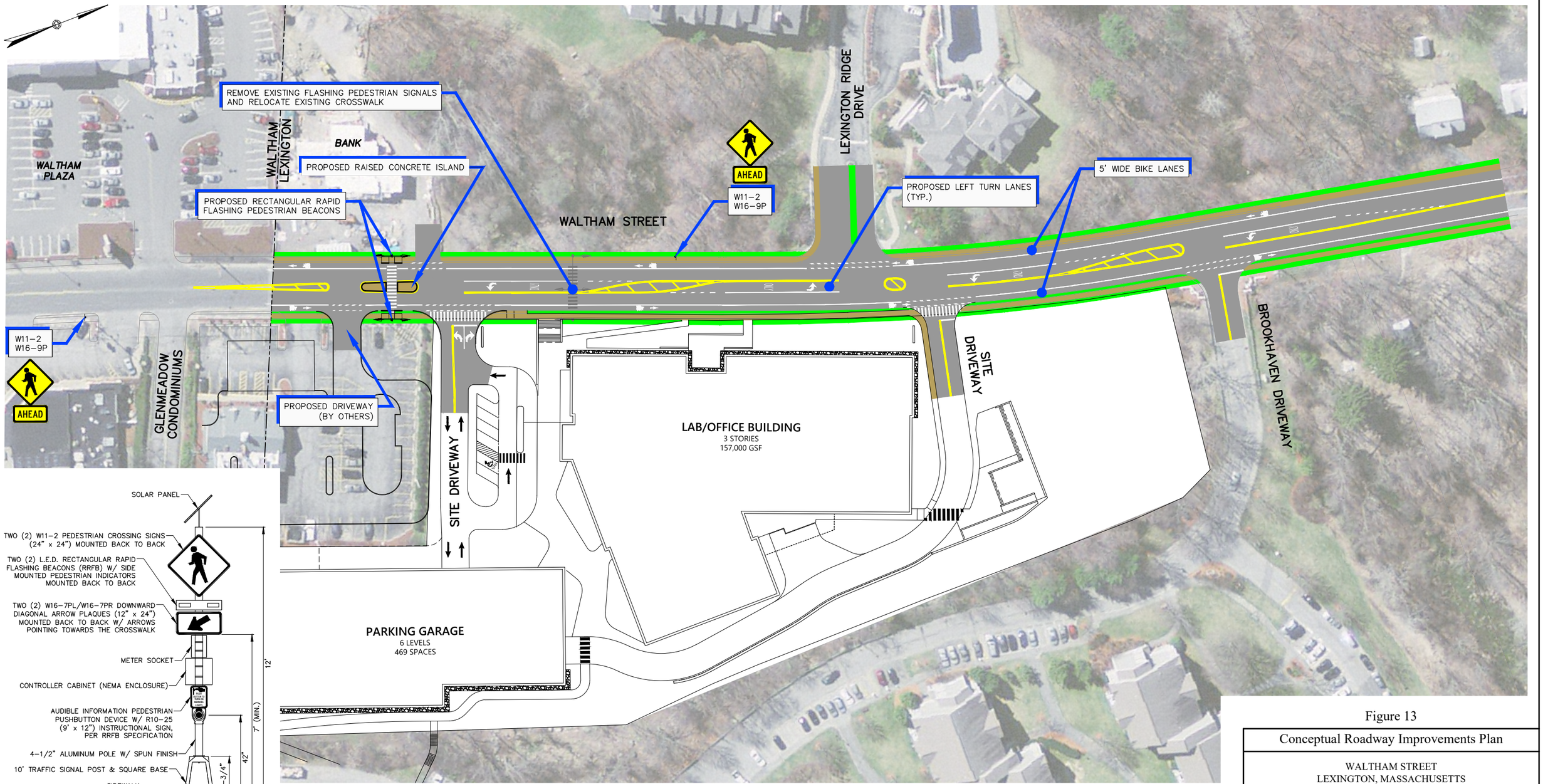

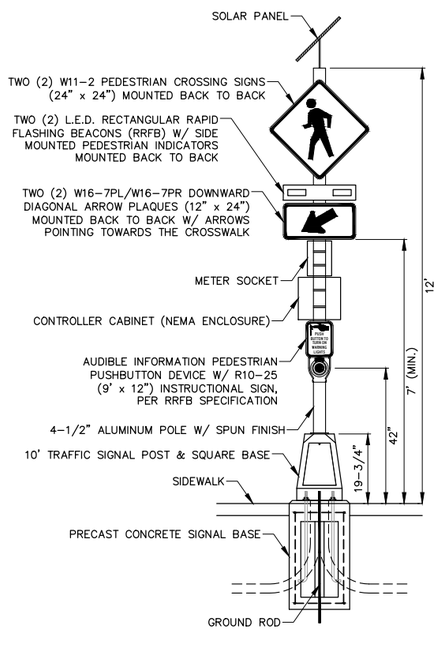

DETAIL FOR RECTANGULAR RAPID FLASHING PEDESTRIAN BEACON
NOT TO SCALE

NOTES

1. THIS PLAN INTENDED FOR DISCUSSION PURPOSES ONLY; IT IS NOT FOR CONSTRUCTION.
2. FINAL DESIGN IS SUBJECT TO FIELD SURVEY BY OTHERS.
3. PROPERTY LINES AND ACCESS LINE LOCATIONS ARE APPROXIMATE ONLY AND ARE SUBJECT TO DEED AND TITLE RECORDS.
4. BASE PLAN SOURCE: VHB AND USGS COLOR ORTHO IMAGERY.

SCALE
0 20 40 80 120 FEET

Figure 13

Conceptual Roadway Improvements Plan

WALTHAM STREET
LEXINGTON, MASSACHUSETTS
PREPARED FOR:
GREATLAND REALTY PARTNERS, LLC
101 FEDERAL STREET, 16TH FLOOR
BOSTON, MASSACHUSETTS 02110

MDM TRANSPORTATION CONSULTANTS, INC.
PLANNERS & ENGINEERS
28 Lord Road, Suite 280
Marlborough, MA 01752
Tel: (508) 303-0370
Fax: (508) 303-0371

DATE: February 5, 2020	SCALE: As Noted	
PROJECT No. 1057	File: 1057 Concept Plan - Site Final.dwg	Sheet 1 of 1

COPYRIGHT © MDM TRANSPORTATION CONSULTANTS, INC. PLANNERS & ENGINEERS

REVOLUTION LABS

SITE SIGNAGE
GARAGE ENTRY SIGNAGE

1050 Waltham Street, Lexington, MA

GREATLAND
REALTY PARTNERS

DESIGN INTENT PACKAGE

08.17.22

omloop
it's all connected

LEXINGTON SIGN BYLAWS

5.2. SIGNS.

5.2.4 General Regulations.
1. Illumination. No sign shall be illuminated between the hours of 11:00 p.m. and 6:00 a.m., except signs on premises open for business, and then only upon issuance of a special permit by the SPGA. Exterior illumination of signs shall be shielded, directed solely at the sign, and be steady and stationary. **No internal illumination of a sign is permitted** except upon issuance of a special permit by the SPGA. The illumination of any sign shall not exceed 150 footlamberts.

5.2.8 Commercial Districts. The provisions of this section shall apply to signs in commercial districts. Accessory signs on business establishments or institutions in commercial districts that comply with the following provisions are permitted:

1. Wall signs.
a. One principal wall sign is permitted on the front of the establishment to which it relates. **The width of such a sign above the first floor of a building shall not exceed three feet.**

b. A secondary wall sign may be installed marking a direct entrance on a parking lot or another street in addition to the front wall sign. There shall be not more than two such secondary wall signs. Said sign shall have a width no greater than 50% of the maximum permissible width for the principal wall sign.

c. No wall sign shall be more than three feet in overall height.

d. In buildings where the first story is substantially above grade and the basement is only partially below street grade, one sign for each level is allowed if each sign has only 1/2 of the area that would be permitted for a single sign.

e. In addition to the above signs, each building with multiple occupants may have one directory sign affixed to the exterior wall, window or door of the building. Such directory sign shall provide not more than one square foot for each occupant of the building.

f. Wall signs shall either be affixed to a wall and parallel to it or affixed to the roof above a wall and be parallel to the wall. They shall not project more than 12 inches from the face of such wall.

g. No wall sign shall project above the highest line of the main roof or parapet on the wall to which it is attached, whichever is higher.

2. Projecting signs.
a. In particular instances the SPGA may issue special permits for projecting signs in accordance with § 5.2.10, if it is determined that the architecture of the building, the location of the building with reference to the street or the nature of the establishment is such that the sign should be permitted in the public interest. No establishment shall be permitted more than one projecting sign.
[Amended 3-23-2016 ATM by Art. 37]

b. Notwithstanding § 5.2.8.2.a, in the CB District, one projecting sign per establishment shall be permitted by right, provided it meets the standards set out below. Projecting signs exceeding these dimensions shall be subject to the special permit provisions of § 5.2.10.

i. The sign may not exceed six square feet in area (not including the area of the supporting bracket or hanger);

ii. For single-story structures, the sign shall not project above the roofline or 18 feet, whichever is lower; for multistory structures projecting signs may not extend vertically above the window sill of the second story;

iii. The sign must clear sidewalks by at least eight feet from the bottom of the sign and may project no more than four feet from a building or one-third the width of the sidewalk, whichever is less;

iv. The sign must clear the wall by at least six inches and must project from the wall at an angle of 90°. Angular projection from the corner of a building is prohibited.

3. Standing signs. In particular instances the SPGA may issue special permits for standing signs in accordance with § 5.2.10, if it is determined that the architecture of the building, the location of the building with reference to the street or the nature of the establishment is such that the sign should be permitted in the public interest.

No establishment shall be permitted more than one standing sign other than signs directing traffic flow.

In the CM and CRO Districts one standing sign, not to exceed 50 square feet in area and five feet in height, shall be permitted by right on each lot.

[Amended 3-23-2016 ATM by Art. 37; 4-24-2017 ATM by Art. 43]

https://www.lexingtonma.gov/zoning
04.11.22

omloop
it's all connected

21 Bantry Road
Framingham, MA 01701
508.733.6440

omloopdesign.com

DATE

08.17.22

These drawings are intended to convey design-intent only. They are not for construction. The sign contractor, not the designer, is responsible for the final detailing, structural engineering, fabrication, and installation of the signs. This office shall review contractor's shop drawings and details prior to fabrication solely for conformance with the design intent documents. The sign contractor shall verify in the field all dimensions at the proposed sign locations prior to performing the work, and inform the owner and designer of any conflicts, as-built changes, or additional coordination required from other parties.

PROJECT NAME

REVOLUTION LABS
CORE AND SHELL
1050 WALTHAM ST.
LEXINGTON, MA

PROJECT #

DRAWN BY

BP/TJGP

SHEET TITLE

Design Intent Drawings
Pricing Set

SHEET NUMBER

LEXINGTON ZONING MAP
1050 Waltham Street, Lexington, MA

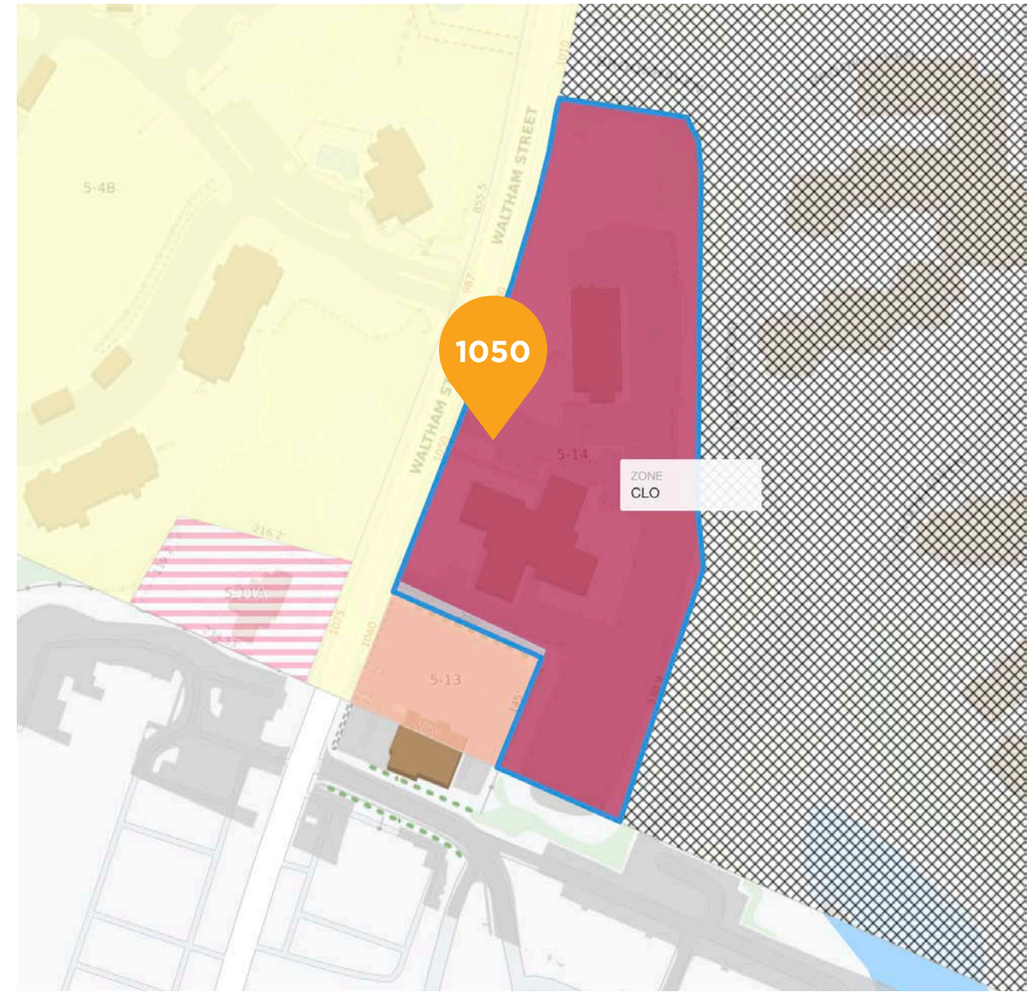

COMMERICAL / INDUSTRIAL DISTRICT
CLO: Local Office

https://www.lexingtonma.gov/zoning
04.11.22

omloop
it's all connected

21 Bantry Road
Framingham, MA 01701
508.733.6440

omloopdesign.com

DATE

08.17.22

These drawings are intended to convey design-intent only. They are not for construction. The sign contractor, not the designer, is responsible for the final detailing, structural engineering, fabrication, and installation of the signs. This office shall review contractor's shop drawings and details prior to fabrication solely for conformance with the design intent documents. The sign contractor shall verify in the field all dimensions at the proposed sign locations prior to performing the work, and inform the owner and designer of any conflicts, as-built changes, or additional coordination required from other parties.

PROJECT NAME

REVOLUTION LABS
CORE AND SHELL
1050 WALTHAM ST.
LEXINGTON, MA

PROJECT #

DRAWN BY

BP/TJGP

SHEET TITLE

Design Intent Drawings
Pricing Set

SHEET NUMBER

Primary brand colors

PMS 2181c

PMS 313c

Secondary brand colors

PMS 8222c

PMS CG10c

White
MP32071
White Wonder

PMS Black C

Matthews
MP11185
Rell Sunn

Tertiary brand colors (garage levels)

Color 1

Color 2

Color 3

Color 4

PMS Cool
Gray 1C

PMS 186c

3M™ Scotchcal
Red 263

Other project finishes

PMS 2182c

MP 41342SP
Brushed
Aluminum

Matte White
3M™ Scotchcal
Matte White
20

Reflective
Yellow
3M™ Scotchlite
680-71

Reflective
White
3M™ Scotchlite
680-10

Project Icons

Parking & Regulatory symbols

Raised Characters:
Trade Gothic LTD Std Cond No. 18

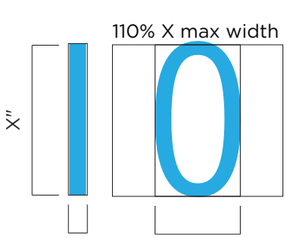

<15% X max. >55% X min.

Visual Characters:
Akzidenz-Grotesk BQ Regular

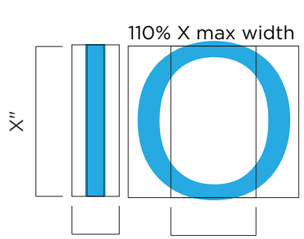

<30% X max. >55% X min.

Visual Characters:
Akzidenz-Grotesk
Bold Condensed

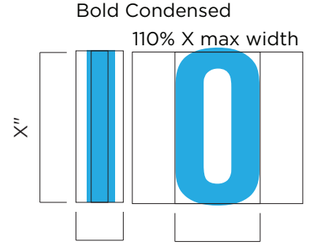

<30% X max. >55% X min.

Logomarks

REVOLUTIONLABS

Typography - Primary Font

ABCDEFGHIJKLMNOPQRSTUVWXYZ
ABCDEFGHIJKLMNOPQURSTUVWXYZ
0123456789:;.,@*“”()!?

Akzidenz-Grotesk BQ Light Small Caps

Typography - Secondary Fonts (Akzidenz-Grotesk BQ Full Family is acceptable for use)

ABCDEFGHIJKLMNOPQRSTUVWXYZ
abcdefghijklmnopqurstuvwxyz
0123456789:;.,@*“”()!?

Trade Gothic LTD Std Condensed No.18

ABCDEFGHIJKLMNOPQRSTUVWXYZ
abcdefghijklmnopqurstuvwxyz
0123456789:;.,@*“”()!?

Akzidenz-Grotesk BQ Regular

ABCDEFGHIJKLMNOPQRSTUVWXYZ
abcdefghijklmnopqurstuvwxyz
0123456789:;.,@*“”()!?

Akzidenz-Grotesk BQ Bold Condensed

ABCDEFGHIJKLMNOPQRSTUVWXYZ
abcdefghijklmnopqurstuvwxyz
0123456789:;.,@*“”()!?

Akzidenz-Grotesk BQ Extra Bold Condensed

Font sources (from branding firm)
Here is a link where Akzidenz-Grotesk BQ Light Small can be found for download.
https://www.download-fonts-free.com/download/71492/akzidenz-grotesk+bq+light+small+caps++oldstyle+figures
Akzidenz-Grotesk BQ Full family with all variations on this font can be downloaded
https://www.download-fonts-free.com/search?sq=akzidenz-grotesk+BQ+#google_vignette

omloop
it's all connected

21 Bantry Road
Framingham, MA 01701
508.733.6440

omloopdesign.com

DATE

08.17.22

These drawings are intended to convey design-intent only. They are not for construction. The sign contractor, not the designer, is responsible for the final detailing, structural engineering, fabrication, and installation of the signs. This office shall review contractor's shop drawings and details prior to fabrication solely for conformance with the design intent documents. The sign contractor shall verify in the field all dimensions at the proposed sign locations prior to performing the work, and inform the owner and designer of any conflicts, as-built changes, or additional coordination required from other parties.

PROJECT NAME

REVOLUTION LABS
CORE AND SHELL
1050 WALTHAM ST.
LEXINGTON, MA

PROJECT #

DRAWN BY

BP/TJGP

SHEET TITLE

Design Intent Drawings
Pricing Set

SHEET NUMBER

SITE SIGNAGE

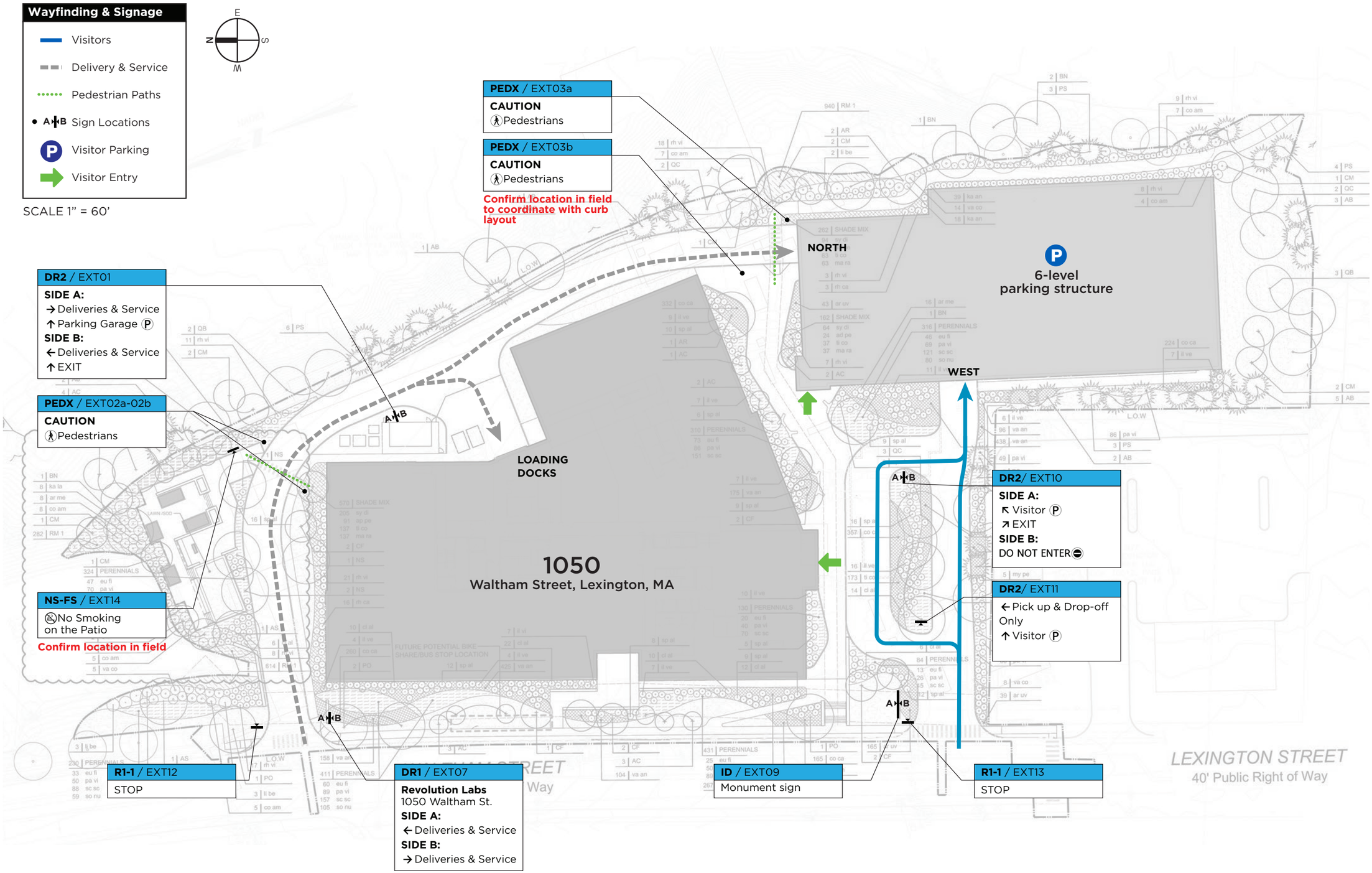

omloop
it's all connected

21 Bantry Road
Framingham, MA 01701
508.733.6440

omloopdesign.com

DATE

08.17.22

These drawings are intended to convey design-intent only. They are not for construction. The sign contractor, not the designer, is responsible for the final detailing, structural engineering, fabrication, and installation of the signs. This office shall review contractor's shop drawings and details prior to fabrication solely for conformance with the design intent documents. The sign contractor shall verify in the field all dimensions at the proposed sign locations prior to performing the work, and inform the owner and designer of any conflicts, as-built changes, or additional coordination required from other parties.

PROJECT NAME

REVOLUTION LABS
CORE AND SHELL
1050 WALTHAM ST.
LEXINGTON, MA

PROJECT #

DRAWN BY

BP/TJGP

SHEET TITLE

Design Intent Drawings
Pricing Set

SHEET NUMBER

SITE SIGN LOCATION PLAN GS.8

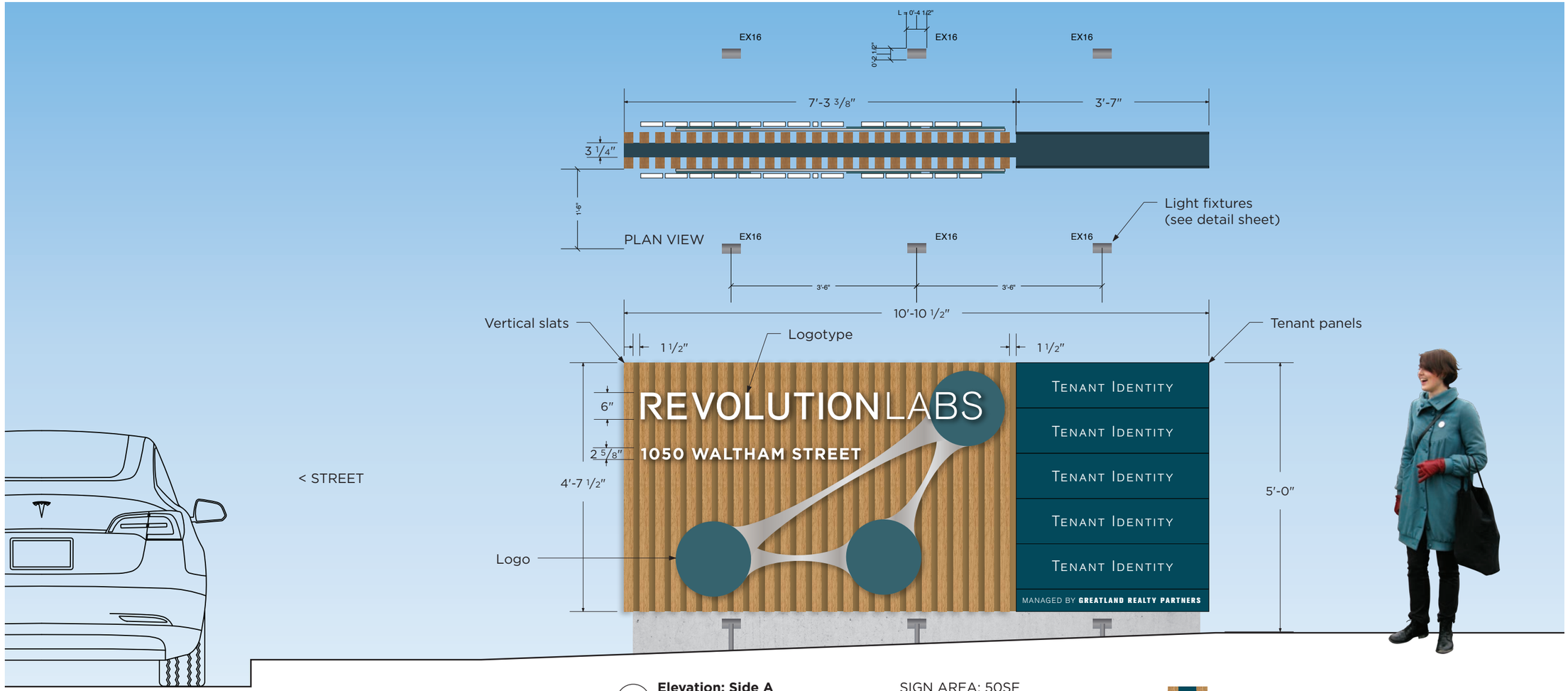

1 **Elevation: Side A**

Scale: 1/2"= 1'-0"

SIGN AREA: 50SF

Fabrication details:
Cabinet: internally framed, aluminum cladding
Vertical slats: BN Fortina™, 50mmx60mm
Tenant panels: flush-fitting aluminum panels, magnetic attachment, set into registered recessess
Logotype: 1" deep, painted, blind studs, 1" spacers
Address: 1/2" thick, painted, blind studs, flush mounted
Logo back layer: 1/2" thick, mounted flush
Logo front layer (circles): 1/2" thick, mounted flush to logo back layer

Type specifications:
Akzidenz Grotesk BQ (artwork as paths provided)

Color specifications:
Vertical slats: BN Fortina™ TA-647 Earl Walnut
Background, tenant panels: PMS 2182C
Logotype: MP32071 White Wonder
Address: MP32071 White Wonder
Logo back layer: MP 41342SP Brushed Aluminum
Logo front layer: PMS 2181C

Mounting method and location:
Exposed concrete base as shown, footing by GC
SIgn contractor to coordinate with GC

Special notes:
Lighting and electical work by GC
SIgn contractor to coordinate with GC

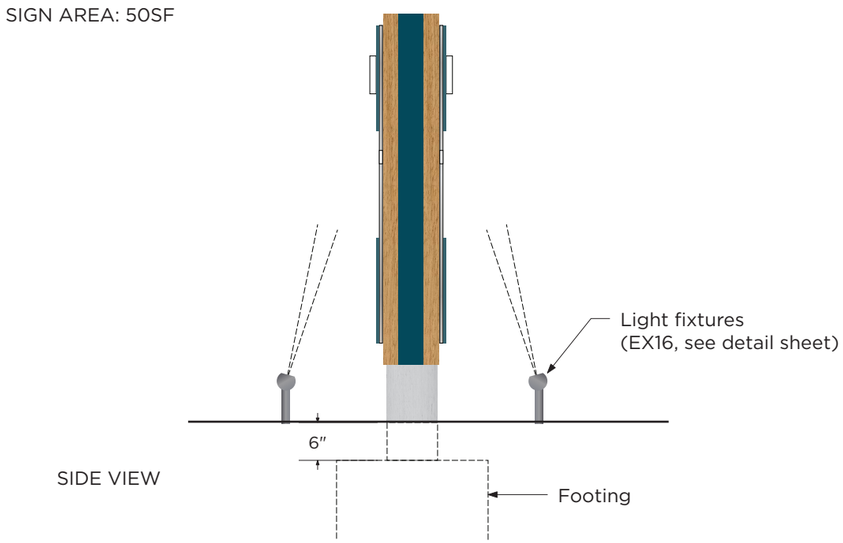

SIDE VIEW

ID MONUMENT SIGN GS.9

omloop
it's all connected

21 Bantry Road
Framingham, MA 01701
508.733.6440

omloopdesign.com

DATE
08.17.22

These drawings are intended to convey design-intent only. They are not for construction. The sign contractor, not the designer, is responsible for the final detailing, structural engineering, fabrication, and installation of the signs. This office shall review contractor's shop drawings and details prior to fabrication solely for conformance with the design intent documents. The sign contractor shall verify in the field all dimensions at the proposed sign locations prior to performing the work, and inform the owner and designer of any conflicts, as-built changes, or additional coordination required from other parties.

PROJECT NAME

REVOLUTION LABS
CORE AND SHELL
1050 WALTHAM ST.
LEXINGTON, MA

PROJECT #

DRAWN BY
BP/TJGP

SHEET TITLE
Design Intent Drawings
Pricing Set

SHEET NUMBER

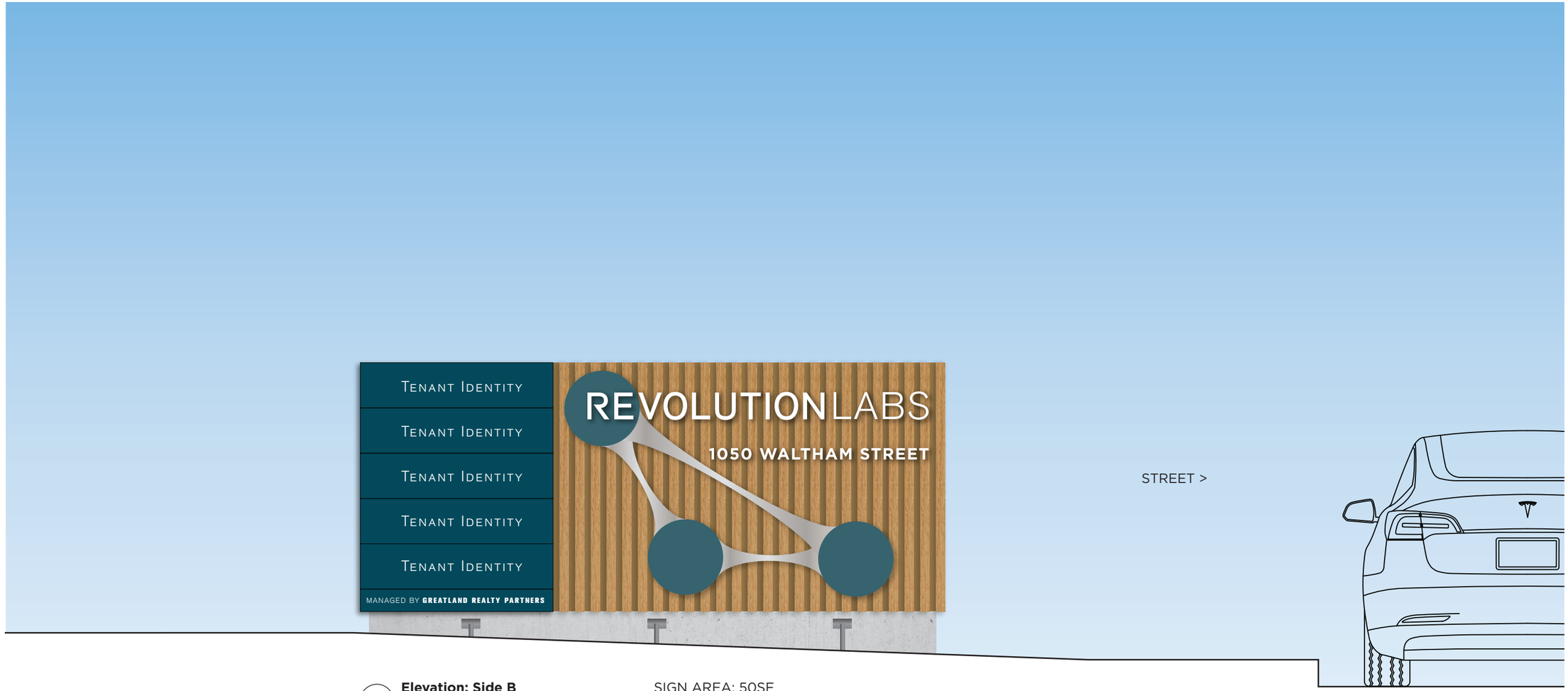

1 **Elevation: Side B**

Scale: 1/2"= 1'-0"

SIGN AREA: 50SF

omloop
it's all connected

21 Bantry Road
Framingham, MA 01701
508.733.6440

omloopdesign.com

DATE

08.17.22

These drawings are intended to convey design-intent only. They are not for construction. The sign contractor, not the designer, is responsible for the final detailing, structural engineering, fabrication, and installation of the signs. This office shall review contractor's shop drawings and details prior to fabrication solely for conformance with the design intent documents. The sign contractor shall verify in the field all dimensions at the proposed sign locations prior to performing the work, and inform the owner and designer of any conflicts, as-built changes, or additional coordination required from other parties.

PROJECT NAME

REVOLUTION LABS
CORE AND SHELL
1050 WALTHAM ST.
LEXINGTON, MA

PROJECT #

DRAWN BY

BP/TJGP

SHEET TITLE

Design Intent Drawings
Pricing Set

SHEET NUMBER

ID MONUMENT SIGN GS.10

BN

Solutions Products

Home / Products

Fortina

Wooden louvers and slats have been and always will be a treasured design element for interior designers and architects, for a variety of reasons. Their material brings color, warmth, and texture into spaces that are visually ho-hum. Their applications are numerous: façade decoration, sunscreens, blinds, ceilings, installation art.

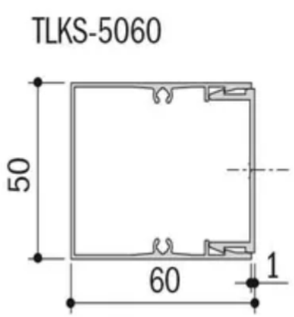

Backrail CLKU-50

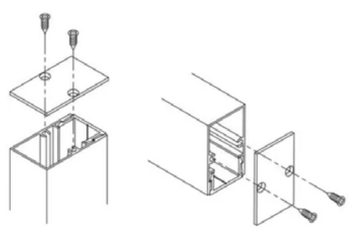

Direct Screw-On End Cap

Exterior Finishes

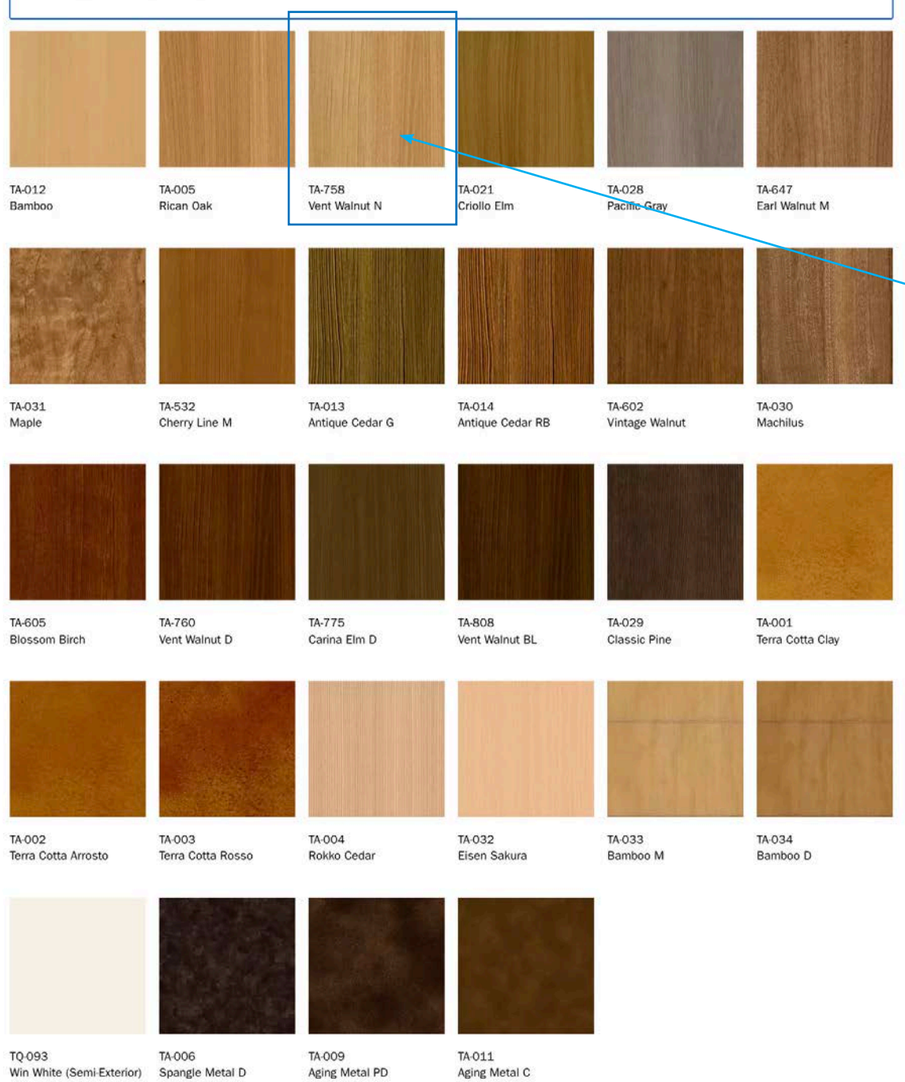

PORCELAIN TILE WALL SYSTEM
Porcelanosa; Tanzania Almond

omloop
it's all connected

21 Bantry Road
Framingham, MA 01701
508.733.6440

omloopdesign.com

DATE

08.17.22

These drawings are intended to convey design-intent only. They are not for construction. The sign contractor, not the designer, is responsible for the final detailing, structural engineering, fabrication, and installation of the signs. This office shall review contractor's shop drawings and details prior to fabrication solely for conformance with the design intent documents. The sign contractor shall verify in the field all dimensions at the proposed sign locations prior to performing the work, and inform the owner and designer of any conflicts, as-built changes, or additional coordination required from other parties.

PROJECT NAME

REVOLUTION LABS
CORE AND SHELL
1050 WALTHAM ST.
LEXINGTON, MA

PROJECT #

DRAWN BY

BP/TJGP

SHEET TITLE

Design Intent Drawings
Pricing Set

SHEET NUMBER

ID MONUMENT SIGN / SLAT DETAILS GS.11

TYPE	APPLICATION IMAGE	LOCATION	DESCRIPTION	LAMPS/SOURCE	POWER SUPPLY/ DRIVER	INPUT WATTS	INPUT WATT UNITS	LISTING	MANUFACTURER	NOTES
										1. Fixture shall dim. system.
EX16		SIGNAGE	Adjustable 4-1/2" long x 2-5/8" diameter LED floodlight, copper-free aluminum body, silicone 'O' ring for water-tight seal, 180° vertical adjustment knuckle, biaxial 360° horizontal rotation, shock resistant tempered glass lens, polyester powder coating, soft focus lens, honeycomb baffle, cutoff visor, wall washer optics, and ingrade HP2 mounting system, IP66 rated.	LED 3000K 80+ CRI L70 @ 50,000 Hours 485 Lumens	Remote Driver (Integral to Ingrade Housing HP2) DIM 0-10V	10.0W	EA	UL Listed for Wet Locations	BK LIGHTING Saratoga LED + HP2 Driver Housing #SA-LED-x53-WW-FINISH-13-CV-360SL (Fixture) + HP2-010-FINISH-MT-GM-R (Integral Driver Mounting)	1. Fixture shall dim. 2. Fixture shall be U.L. listed and labeled "suitable for wet locations". 3. Contractor shall verify and coordinate fixture installation, mounting, and conduit entry, housing type, and field conditions with landscape architect.

SARATOGA - HP2 INTEGRAL DRIVER HOUSING (10W)

ORDER FIXTURE SEPARATELY.

DATE: | PROJECT: | TYPE:

CATALOG NUMBER LOGIC:

**120V only.*

CATALOG NUMBER LOGIC
Example: HP2 - 010 - BZW - MT - GM-R
MATERIAL
Aluminum
SERIES
HP2 - Integral In-grade (Flush)
CONTROL TYPE
ELV - Dimming Driver (For use with Electronic Low Voltage Dimmer)*
INC - Dimming Driver (For use with Incandescent Dimmer)*
010 - 0-10V Dimming Driver (Dimming 1 - 100%)
FINISH
Standard Finishes (BZP, BZW, BLP, BLW, WHP, WHW, SAP, VER)
Premium Finish (ABP, AMG, AQW, BCM, BGE, BPP, CAP, CMG, CRI, CRM, HUG, MDS, NBP, OCP, RMG, SDS, SMG, TXF, WCP, WIR)
(Also available in RAL Finishes. See submittal SUB-1439-00)
INPUT VOLTAGE
MT - 120-277 VAC
OPTIONS
GM-R - Round Grout Mask
GM-S - Square Grout Mask

B-K LIGHTING | MADE IN THE USA | 559.438.5800 | INFO@BKLIGHTING.COM | BKLIGHTING.COM

THIS DOCUMENT CONTAINS PROPRIETARY INFORMATION OF B-K LIGHTING, INC. AND ITS RECEIPT OR POSSESSION DOES NOT CONVEY ANY RIGHTS TO REPRODUCE, DISCLOSE ITS CONTENTS, OR TO MANUFACTURE, USE OR SELL ANYTHING IT MAY DESCRIBE. REPRODUCTION, DISCLOSURE OR USE WITHOUT SPECIFIC WRITTEN AUTHORIZATION OF B-K LIGHTING, INC. IS STRICTLY FORBIDDEN. 09/14/2021 SKU-1314

SARATOGA - HP2 INTEGRAL DRIVER HOUSING (10W)

ORDER FIXTURE SEPARATELY.

DATE: | PROJECT: | TYPE:

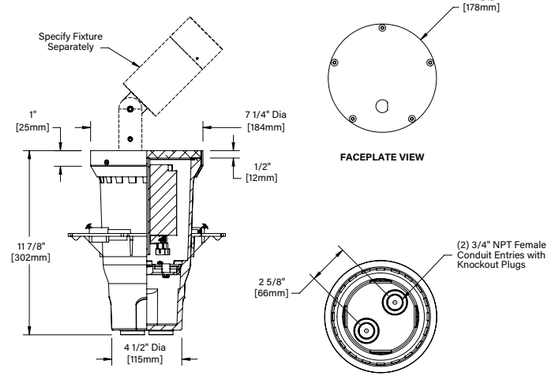

STANDARD FINISHES

Satin Black (BLP), Satin Bronze (BZP), Satin White (WHP), Satin Aluminum (SAP), Black Wrinkle (BLW), Bronze Wrinkle (BZW), White Wrinkle (WHW), Verde (VER)

Click Here to view larger, full-color swatches of all available finishes on our website.

PREMIUM FINISHES

Cascade Mtn. Granite (CMG), Rocky Mtn. Granite (RMG), Sierra Mtn Granite (SMG), Aleutian Mtn Granite (AMG), Textured Forest (TXF), Black Chrome (BCM), Beige (BGE), Weathered Copper (WCP), Old Copper (OCP), Hunter Green (HUG), Cracked Ice (CRI), Mojave Desert Sandstone (MDS), Antique Brass Powder (ABP), Brown Patina Powder (BPP), Sonoran Desert Sandstone (SDS), Weathered Iron (WIR), Clear Anodized Powder (CAP), Cream (CRM), Antique White (AQW), Natural Brass Powder (NBP)

B-K LIGHTING | MADE IN THE USA | 559.438.5800 | INFO@BKLIGHTING.COM | BKLIGHTING.COM

THIS DOCUMENT CONTAINS PROPRIETARY INFORMATION OF B-K LIGHTING, INC. AND ITS RECEIPT OR POSSESSION DOES NOT CONVEY ANY RIGHTS TO REPRODUCE, DISCLOSE ITS CONTENTS, OR TO MANUFACTURE, USE OR SELL ANYTHING IT MAY DESCRIBE. REPRODUCTION, DISCLOSURE OR USE WITHOUT SPECIFIC WRITTEN AUTHORIZATION OF B-K LIGHTING, INC. IS STRICTLY FORBIDDEN. 09/14/2021 SKU-1314

SARATOGA - HP2 INTEGRAL DRIVER HOUSING (10W)

ORDER FIXTURE SEPARATELY.

DATE: | PROJECT: | TYPE:

Accessories *(Configure separately)*

SPECIFICATIONS

Electrical	WIRING / CONNECTORS	XLPE coated wire, (3)18 gauge and [(2)22 gauge- only included with 0-10V Dimming applications]. 300V, 125°C rated and certified to UL3265 standard. Features gear tray quick disconnects. Patented HydroLock® with three (3) Water-Tight connectors supplied for incoming connection. Maximum (2) #10 & (1) #18. Minimum (1) #12 & (1) #18.
	DRIVER ASSEMBLY	One (1) 350mA, Class A, constant current driver. 120-277VAC (nominal) primary input voltage. 50/60Hz. >0.90 Power Factor, 0.25A input current., 20%THD (nominal at 120VAC full load). Output overvoltage, over-current, and short circuit protection with auto recovery. Incandescent Control Option Driver: Dimming driver for use with standard incandescent dimmers at 120VAC(10-100% range). ELV/0-10 Control Option Driver: Dimming driver for use with standard electronic low voltage (120VAC only - 10-100% dim. range)/0-10V dimmers (1-100% dim. range).
PHYSICAL	MATERIALS	Furnished in copper-free aluminum (6061-T6), brass (360), or stainless steel (304).
	FACEPLATE	Solid, 1/2" machined 6061-T6 copper-free aluminum with five (5) black oxide, captive, stainless steel mounting screws.
	HOUSING	Corrosion-free, high strength, flame retardant and UV stabilized, injected molded polycarbonate. Two (2) bottom-entry, 3/4" NPT female conduit entries with knockout plugs and four (4) side flats for 1/2" or 3/4" conduit adapters.
	PATENTED STABILITY FLANGE	Corrosion-free composite flange projects into installation substrate to reinforce housing stability. Integral REBAR saddles simplify installation into concrete form. Four (4) orthogonal bosses permit use of 1/2" PCV conduit or EMT to simplify vertical position and leveling of housing. Preset self-tapping screws anchor housing at proper elevation.
	INSTALLATION	Integral, copper-free aluminum concrete pour collar (CPC), furnished in black finish, permits for direct burial in soil or concrete. Consult Drainage Installation Guide for In-Grade Fixtures (DIG-IT) for compliance with proper soil preparation and drainage requirements prior to installation.
	WATER MANAGEMENT	High temperature silicone 'O' Ring at faceplate. HydroLock® technology provides fail-safe water barrier between junction box and interior components. IP68 rated.
	FINISH	StarGuard, our 15-stage, chromate-free process cleans and conversion coats aluminum components prior to application of Class 'A' TGIC polyester powder coating and is RoHS compliant. Finish to match fixture (specified separately).
	WARRANTY	5-year limited warranty.
	CERTIFICATION & LISTING	Certified to CAN/CSA/ANSI Standards. UL Listed. IP-68 Rated enclsosure. RoHS compliant. Made in the USA with sustainable processes.

B-K LIGHTING | MADE IN THE USA | 559.438.5800 | INFO@BKLIGHTING.COM | BKLIGHTING.COM

THIS DOCUMENT CONTAINS PROPRIETARY INFORMATION OF B-K LIGHTING, INC. AND ITS RECEIPT OR POSSESSION DOES NOT CONVEY ANY RIGHTS TO REPRODUCE, DISCLOSE ITS CONTENTS, OR TO MANUFACTURE, USE OR SELL ANYTHING IT MAY DESCRIBE. REPRODUCTION, DISCLOSURE OR USE WITHOUT SPECIFIC WRITTEN AUTHORIZATION OF B-K LIGHTING, INC. IS STRICTLY FORBIDDEN. 09/14/2021 SKU-1314

Using 6 of them (3 on each side of the signage) we obtain the light levels required.

Regarding the LEED light pollution reduction credit, be aware that the light emitted by this fixture will be 100% above horizontal. We are pretty comfortable saying that we should still respect the "Maximum allowed percentage of total luminaire lumens emitted above horizontal.

Table 2. Maximum percentage of total lumens emitted above horizontal, by lighting zone

MLO lighting zone	Maximum allowed percentage of total luminaire lumens emitted above horizontal
LZ0	0%
LZ1	0%
LZ2	1.5%
LZ3	3%
LZ4	6%

omloop
it's all connected

21 Bantry Road
Framingham, MA 01701
508.733.6440

omloopdesign.com

DATE

08.17.22

These drawings are intended to convey design-intent only. They are not for construction. The sign contractor, not the designer, is responsible for the final detailing, structural engineering, fabrication, and installation of the signs. This office shall review contractor's shop drawings and details prior to fabrication solely for conformance with the design intent documents. The sign contractor shall verify in the field all dimensions at the proposed sign locations prior to performing the work, and inform the owner and designer of any conflicts, as-built changes, or additional coordination required from other parties.

PROJECT NAME

REVOLUTION LABS
CORE AND SHELL
1050 WALTHAM ST.
LEXINGTON, MA

PROJECT #

DRAWN BY

BP/TJGP

SHEET TITLE

Design Intent Drawings
Pricing Set

SHEET NUMBER

ID MONUMENT SIGN / PROPOSED LIGHT FIXTURE GS.12

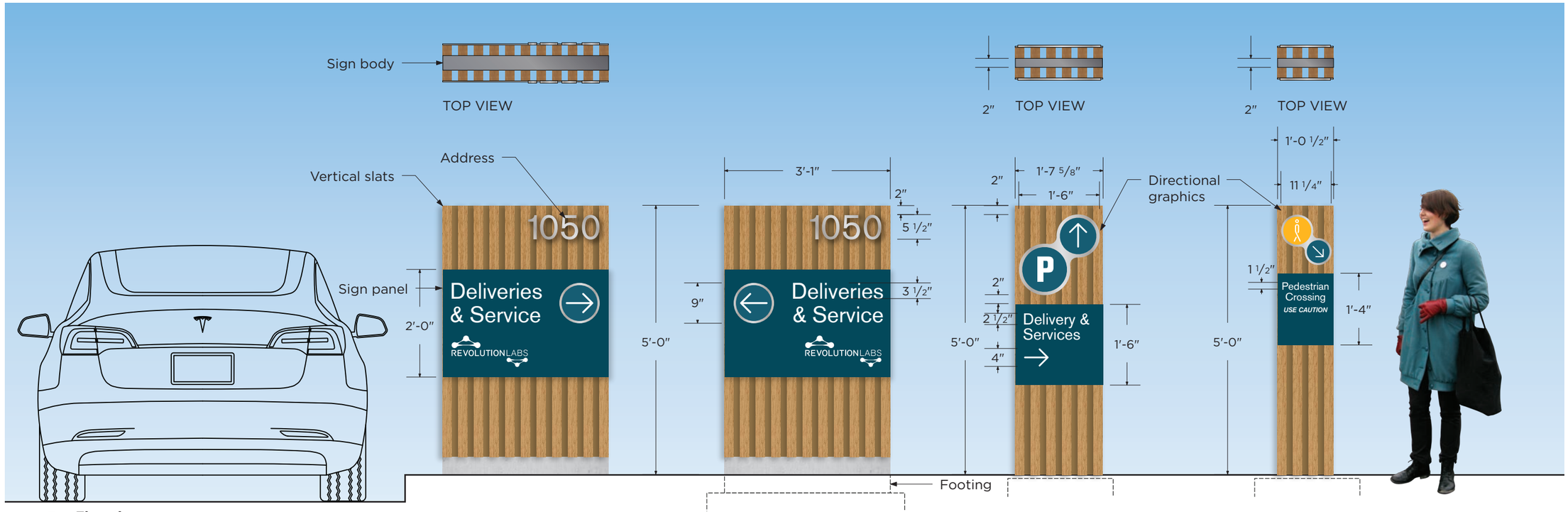

1 **Elevation**
Scale: 1/2”= 1′-0”

DR1 Directional
Side A
Sign Area: 15.4 SF

DR1 Directional
Side B

DR2 Directional
Side A
Sign Area: 8SF

PEDX Ped Crossing
Side A
Sign Area: 5.2SF

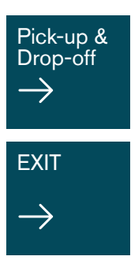

DR2
Panel Layouts

Fabrication details:
Sign body: internally framed, aluminum cladding
Vertical slats: BN Fortina™, 50mmx60mm
Sign panels: 1/4” aluminum panels, painted flush-mounted
Sign panel graphics: reflective vinyl
Address: 1/2” thick, painted, blind studs, flush mounted
Directional graphics: back layer: 1/2” thick, mounted flush
front layer (circles & graphics) applied vinyl flush to logo back layer

Type specifications:
Akzidenz Grotesk BQ Regular

Color specifications:
Vertical slats: BN Fortina™ TA-647 Earl Walnut
Sign panels: PMS 2182c
Address: MP 41342SP Brushed Aluminum
Logo back layer: MP 41342SP Brushed Aluminum
Logo front layer: PMS 2181c
Copy and arrows: Reflective White 3M™ 680-10
Ped disk: Reflective Yellow 3M™ 680-71

Mounting method and location:
Exposed and flush concrete bases as shown, footins by GC
SIgn contractor to coordinate with GC

Special notes:
Non-illuminated signs

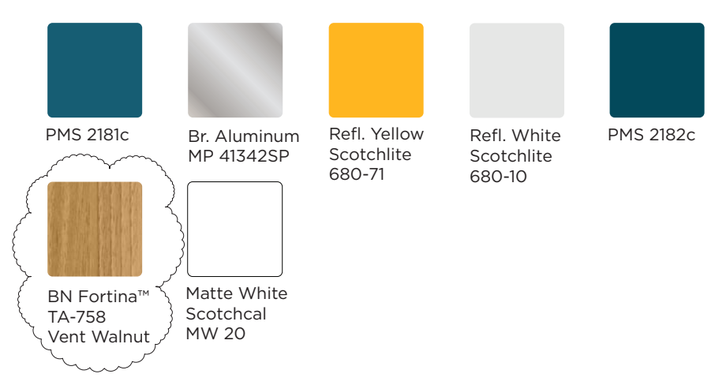

omloop
it's all connected

21 Bantry Road
Framingham, MA 01701
508.733.6440

omloopdesign.com

DATE
08.17.22

These drawings are intended to convey design-intent only. They are not for construction. The sign contractor, not the designer, is responsible for the final detailing, structural engineering, fabrication, and installation of the signs. This office shall review contractor’s shop drawings and details prior to fabrication solely for conformance with the design intent documents. The sign contractor shall verify in the field all dimensions at the proposed sign locations prior to performing the work, and inform the owner and designer of any conflicts, as-built changes, or additional coordination required from other parties.

PROJECT NAME

REVOLUTION LABS
CORE AND SHELL
1050 WALTHAM ST.
LEXINGTON, MA

PROJECT #

DRAWN BY
BP/TJGP

SHEET TITLE
Design Intent Drawings
Pricing Set

SHEET NUMBER

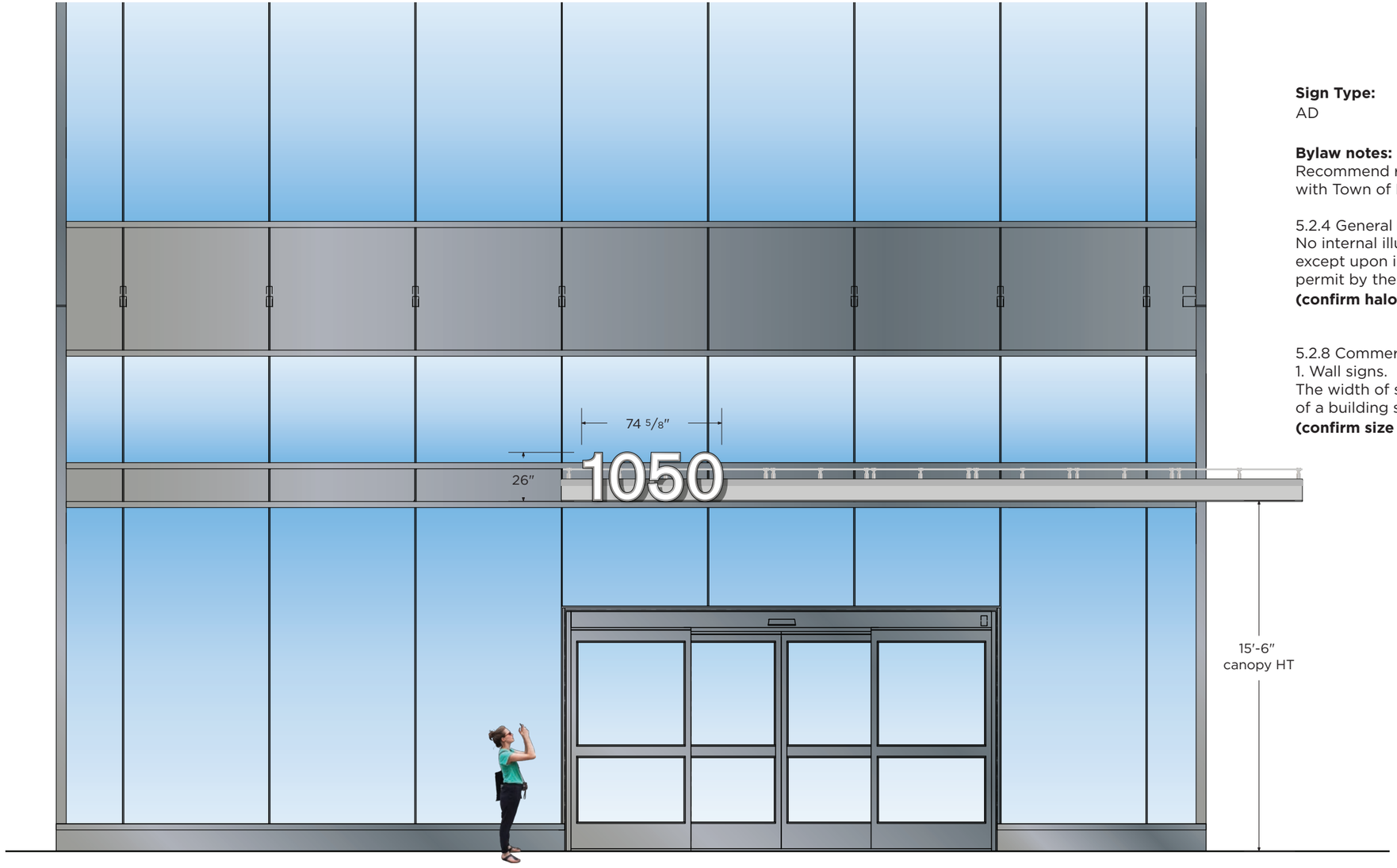

1 **Front Elevation**
3/16" = 1'-0"

SIGN AREA: 13.5 SF

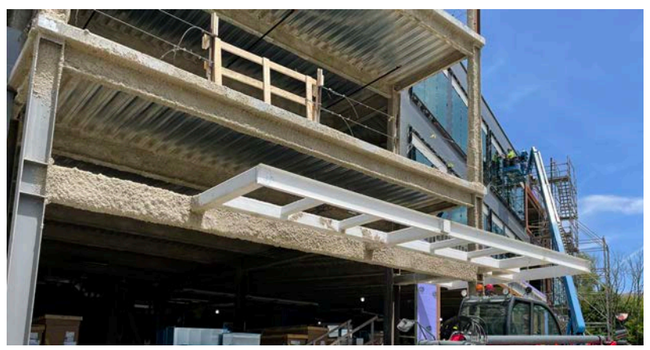

Sign Type:
AD

Bylaw notes:
Recommend reviewing the following
with Town of Lexington ahead of permitting:

5.2.4 General Regulations.
No internal illumination of a sign is permitted
except upon issuance of a special
permit by the SPGA
(confirm halo-lit is acceptable)

5.2.8 Commercial Districts.
1. Wall signs.
The width of such a sign above the first floor
of a building shall not exceed three feet.
(confirm size of address numerals are acceptable)

omloop
it's all connected

21 Bantry Road
Framingham, MA 01701
508.733.6440

omloopdesign.com

DATE

08.17.22

These drawings are intended to convey design-intent only. They are not for construction. The sign contractor, not the designer, is responsible for the final detailing, structural engineering, fabrication, and installation of the signs. This office shall review contractor's shop drawings and details prior to fabrication solely for conformance with the design intent documents. The sign contractor shall verify in the field all dimensions at the proposed sign locations prior to performing the work, and inform the owner and designer of any conflicts, as-built changes, or additional coordination required from other parties.

PROJECT NAME

REVOLUTION LABS
CORE AND SHELL
1050 WALTHAM ST.
LEXINGTON, MA

PROJECT #

DRAWN BY

BP/TJGP

SHEET TITLE

Design Intent Drawings
Pricing Set

SHEET NUMBER

AD BUILDING ADDRESS GS.14

Example: visual quality and layering

Example: halo-lighting and backer layer

Total Sign Area: **13.5 SF**

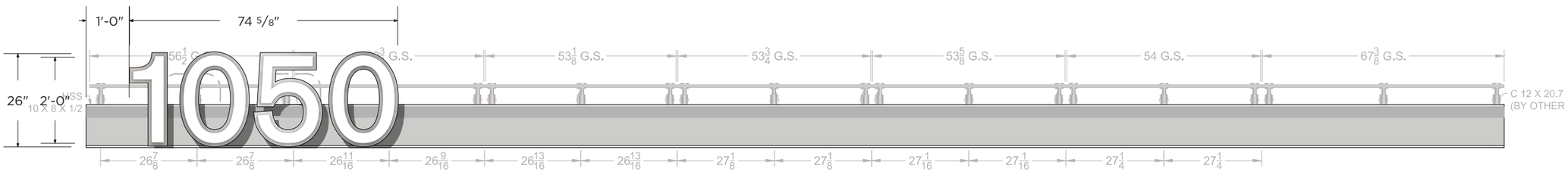

2 CANOPY C6 ELEVATION

1 Canopy C6 Elevation

SCALE: 3/8"=1'-0"

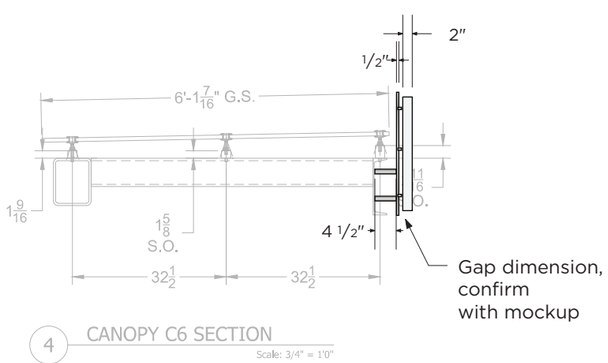

2 Canopy C6 Section

SCALE: 3/8"=1'-0"

White

MP 41342SP Brushed Aluminum

Sign Type:
AD

Fabrication details:
Top layer address: fabricated reverse-channel, halo illum
Back layer address: 1/2" aluminum plate

Type specifications:
Akzidenz-Grotesk BQ Regular

Color specifications:
Back layer: MP 41342SP Brushed Aluminum
Top layer : MP32071 White Wonder

Mounting method and location:
Blind studs with standoffs, drilled and mounted to canopy face steel

Illumination:
Halo-lit (external)
Confirm acceptance with town

Bylaws and code considerations:
(see context elevation)

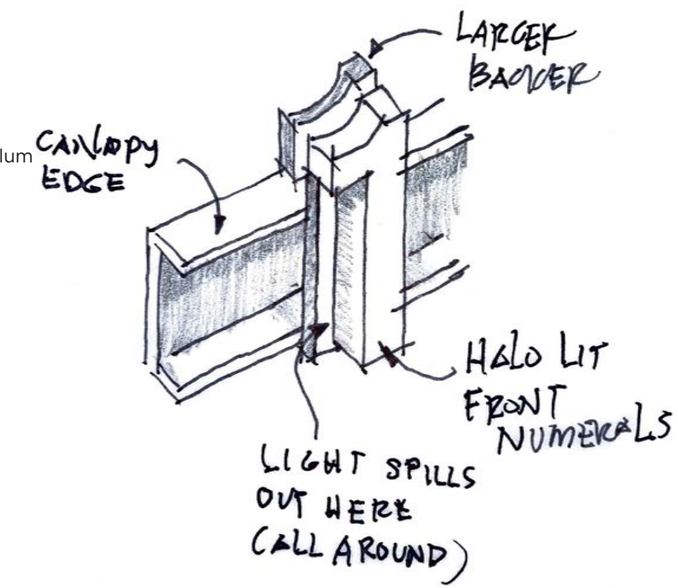

omloop
it's all connected

21 Bantry Road
Framingham, MA 01701
508.733.6440

omloopdesign.com

DATE

08.17.22

These drawings are intended to convey design-intent only. They are not for construction. The sign contractor, not the designer, is responsible for the final detailing, structural engineering, fabrication, and installation of the signs. This office shall review contractor's shop drawings and details prior to fabrication solely for conformance with the design intent documents. The sign contractor shall verify in the field all dimensions at the proposed sign locations prior to performing the work, and inform the owner and designer of any conflicts, as-built changes, or additional coordination required from other parties.

PROJECT NAME

REVOLUTION LABS
CORE AND SHELL
1050 WALTHAM ST.
LEXINGTON, MA

PROJECT #

DRAWN BY

BP/TJGP

SHEET TITLE

Design Intent Drawings
Pricing Set

SHEET NUMBER

AD BUILDING ADDRESS GS.15

Flush Right Layout

Flush Left Layout

1 **Exterior Entry Glass**

Scale: 1:4

omloop
it's all connected

21 Bantry Road
Framingham, MA 01701
508.733.6440

omloopdesign.com

DATE

08.17.22

These drawings are intended to convey design-intent only. They are not for construction. The sign contractor, not the designer, is responsible for the final detailing, structural engineering, fabrication, and installation of the signs. This office shall review contractor's shop drawings and details prior to fabrication solely for conformance with the design intent documents. The sign contractor shall verify in the field all dimensions at the proposed sign locations prior to performing the work, and inform the owner and designer of any conflicts, as-built changes, or additional coordination required from other parties.

PROJECT NAME

REVOLUTION LABS
CORE AND SHELL
1050 WALTHAM ST.
LEXINGTON, MA

PROJECT #

DRAWN BY

BP/TJGP

SHEET TITLE

Design Intent Drawings
Pricing Set

SHEET NUMBER

NSV / NO SMOKING, BUILDING ENTRIES GS.16

1 **Elevation (shown flat)**

Scale: 1:4 NS-FS

Fabrication details:
Sign panel: 1/2” aluminum plate, painted
Graphics: vinyl

Type specifications:
Akzidenz Grotesk BQ Bold Condensed

Color specifications:
Sign panels: PMS 2182c
Graphics: 3M™ Matte White 20

Mounting:
Baseplate, bolted to below-grade poured in place concrete footing

Matte White Scotchcal MW 20

PMS 2182c

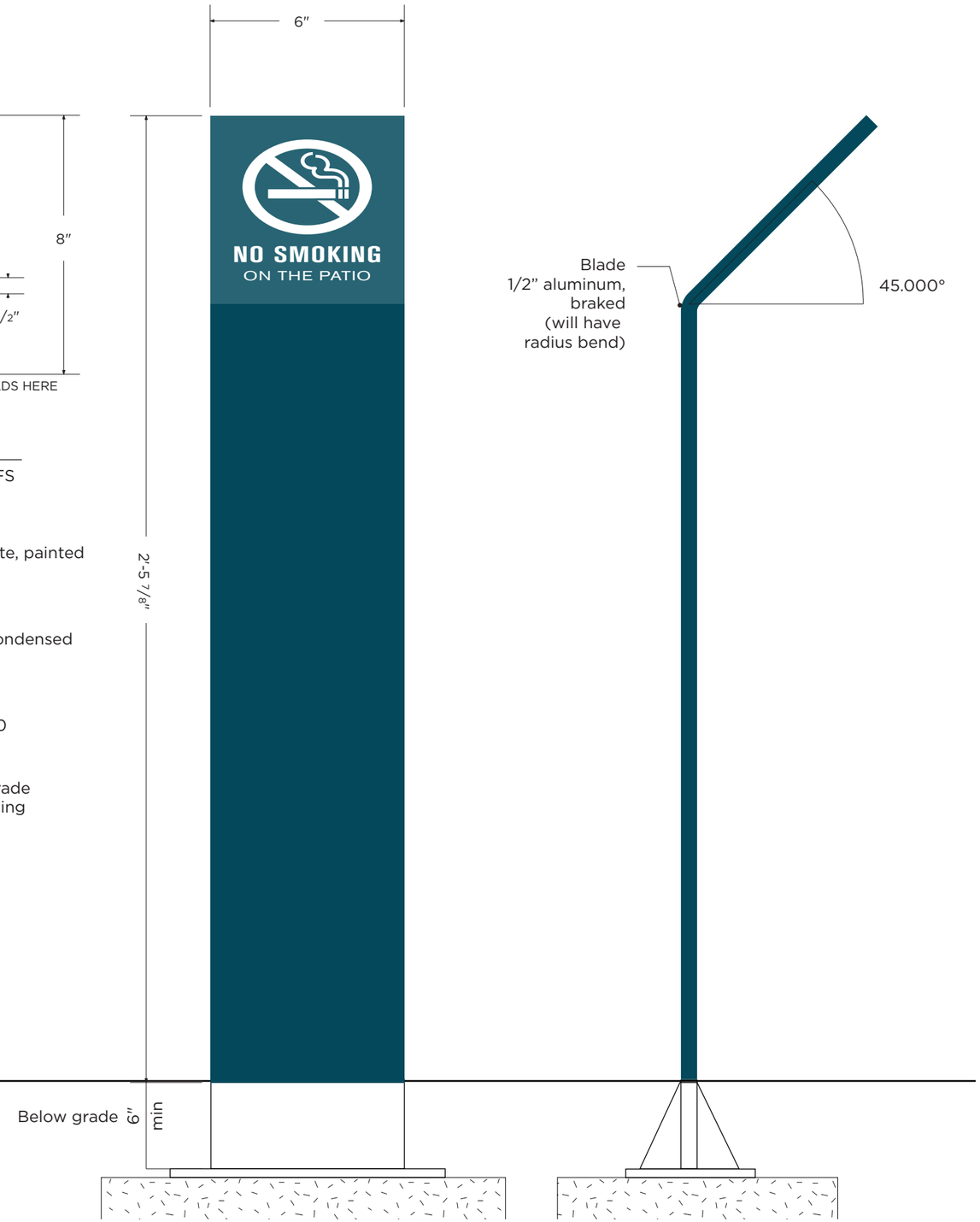

omloop
it's all connected

21 Bantry Road
Framingham, MA 01701
508.733.6440

omloopdesign.com

DATE

08.17.22

These drawings are intended to convey design-intent only. They are not for construction. The sign contractor, not the designer, is responsible for the final detailing, structural engineering, fabrication, and installation of the signs. This office shall review contractor's shop drawings and details prior to fabrication solely for conformance with the design intent documents. The sign contractor shall verify in the field all dimensions at the proposed sign locations prior to performing the work, and inform the owner and designer of any conflicts, as-built changes, or additional coordination required from other parties.

PROJECT NAME

REVOLUTION LABS
CORE AND SHELL
1050 WALTHAM ST.
LEXINGTON, MA

PROJECT #

DRAWN BY

BP/TJGP

SHEET TITLE

Design Intent Drawings
Pricing Set

SHEET NUMBER

NS-FS NO SMOKING / PATIO GS.17

Sign Type:
R1-1,
MUTCD-approved

Fabrication details:
Sign panel: .090” thick aluminum panel
Sign Post: steel, galv. with sleeved breakaway footing
Graphics: Retro-reflective vinyl

Type specifications:
MUTCD-approved standard graphics

Color specifications:
Post and back of sign: PMS 7546C

Mounting method and location:
Direct burial, poured in place concrete

Special notes:
None

PMS 2182c

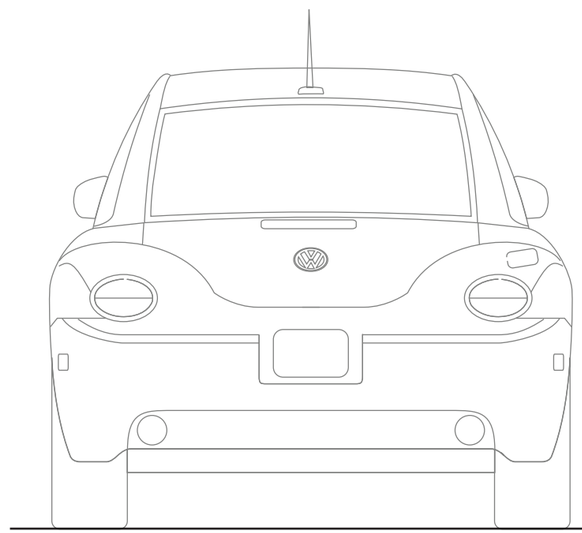

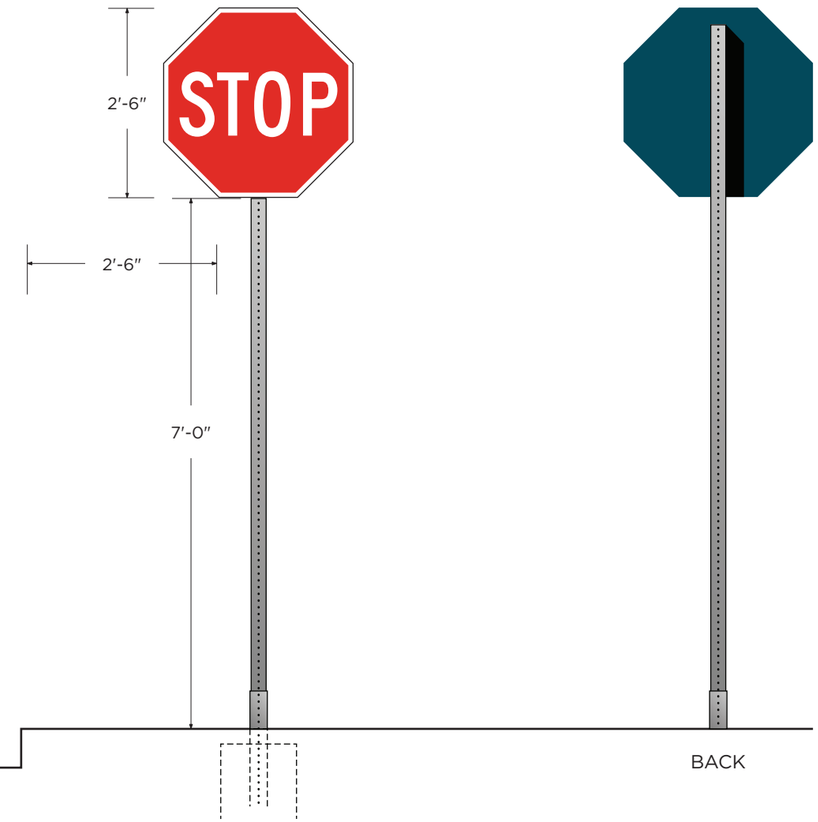

1 **Traffic Regulatory**
Scale: 1/2”=1’0”

omloop
it's all connected

21 Bantry Road
Framingham, MA 01701
508.733.6440

omloopdesign.com

DATE
08.17.22

These drawings are intended to convey design-intent only. They are not for construction. The sign contractor, not the designer, is responsible for the final detailing, structural engineering, fabrication, and installation of the signs. This office shall review contractor's shop drawings and details prior to fabrication solely for conformance with the design intent documents. The sign contractor shall verify in the field all dimensions at the proposed sign locations prior to performing the work, and inform the owner and designer of any conflicts, as-built changes, or additional coordination required from other parties.

PROJECT NAME

REVOLUTION LABS
CORE AND SHELL
1050 WALTHAM ST.
LEXINGTON, MA

PROJECT #

DRAWN BY
BP/TJGP

SHEET TITLE
Design Intent Drawings
Pricing Set

SHEET NUMBER

R1-1 STOP SIGN GS.18

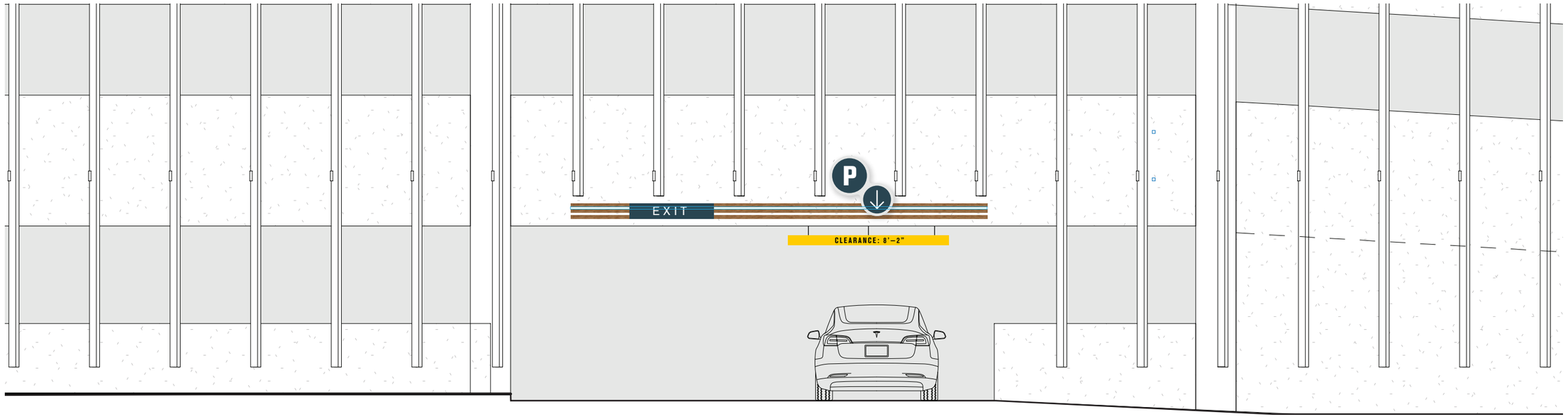

1 **Entry / West Elevation**

3/16" = 1'-0"

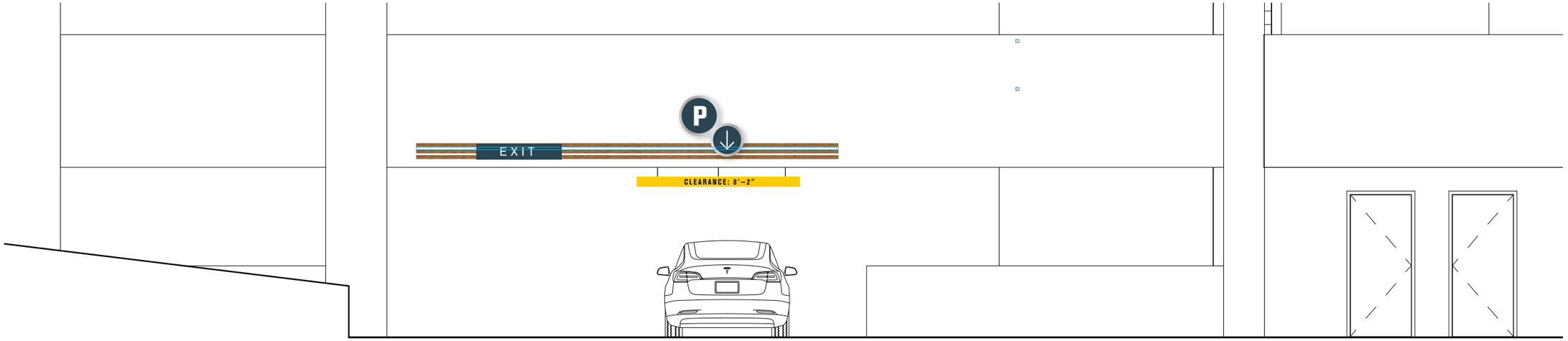

2 **Entry / North Elevation**

3/16" = 1'-0"

omloop
it's all connected

21 Bantry Road
Framingham, MA 01701
508.733.6440

omloopdesign.com

DATE

08.17.22

These drawings are intended to convey design-intent only. They are not for construction. The sign contractor, not the designer, is responsible for the final detailing, structural engineering, fabrication, and installation of the signs. This office shall review contractor's shop drawings and details prior to fabrication solely for conformance with the design intent documents. The sign contractor shall verify in the field all dimensions at the proposed sign locations prior to performing the work, and inform the owner and designer of any conflicts, as-built changes, or additional coordination required from other parties.

PROJECT NAME

REVOLUTION LABS
CORE AND SHELL
1050 WALTHAM ST.
LEXINGTON, MA

PROJECT #

DRAWN BY

BP/TJGP

SHEET TITLE

Design Intent Drawings
Pricing Set

SHEET NUMBER

GE1 PARKING ENTRY/EXIT GS.19

TOTAL SIGN AREA: 23SF

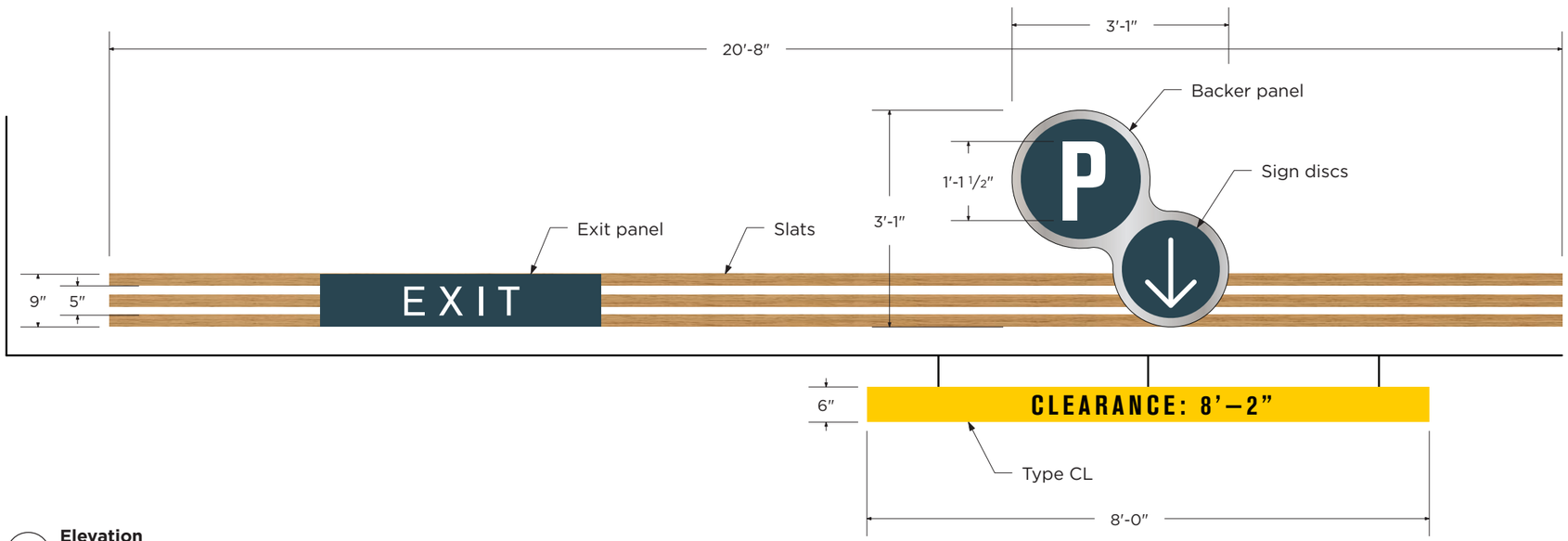

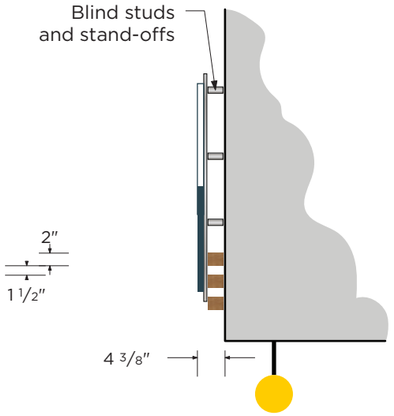

SIDE VIEW

1 **Elevation**
1/2" = 1'-0"

Fabrication details:
Horizontal slats: BN Fortina™, 50mmx60mm
Exit panel: 1/4" aluminum, painted
Backer panel: 1/2" thick, mounted to conc. with blind studs and standoffs
Sign disks: 1/" thick, painted, flush mounted
Clearance bar: PVC pipe, flush capped ends, painted
Graphics: vinyl

Type specifications:
Akzidenz Grotesk BQ (artwork as paths provided)

Color specifications:
Horizontal slats: BN Fortina™, TA-647 Earl Walnut
Exit panel, sign discs: PMS 2182C
Backer panel: MP 41342SP Brushed Aluminum
Graphics: White 3M™ Scotchlite 680-10
Clearance bar: Matthews MP11185 Rell Sunn

Mounting method and location:
Mounts to garage concrete sections

Special notes:
Non-illuminated sign
Coordinate anchor locations in post-tension concrete with GC

BN Fortina™ TA-758 Vent Walnut | Reflective White 3M™ Scotchlite 680-10 | MP 41342SP Brushed Aluminum | PMS 2182c | Matthews MP11185 Rell Sunn

omloop
it's all connected

21 Bantry Road
Framingham, MA 01701
508.733.6440

omloopdesign.com

DATE
08.17.22

These drawings are intended to convey design-intent only. They are not for construction. The sign contractor, not the designer, is responsible for the final detailing, structural engineering, fabrication, and installation of the signs. This office shall review contractor's shop drawings and details prior to fabrication solely for conformance with the design intent documents. The sign contractor shall verify in the field all dimensions at the proposed sign locations prior to performing the work, and inform the owner and designer of any conflicts, as-built changes, or additional coordination required from other parties.

PROJECT NAME

REVOLUTION LABS
CORE AND SHELL
1050 WALTHAM ST.
LEXINGTON, MA

PROJECT #

DRAWN BY
BP/TJGP

SHEET TITLE
Design Intent Drawings
Pricing Set

SHEET NUMBER

GE1 / CL PARKING ENTRY/EXIT GS.20

END OF DOCUMENT

AGENDA ITEM SUMMARY

LEXINGTON PLANNING BOARD

AGENDA ITEM TITLE:

95 Hayden Ave. & 128 Spring St. (99 Hayden Ave.) – Public Hearing for Major Site Plan Review

PRESENTER:

Applicant: Hobbs Brook Real Estate LLC

ITEM NUMBER:

SUMMARY:

The Lexington Planning Board will hold a virtual public hearing on Wednesday, August 17, 2022, at 7:00 p.m. to review the application of Hobbs Brook Real Estate LLC, for a Major Site Plan Review at 95 Hayden Avenue and 128 Spring Street (99 Hayden Avenue) pursuant to Sections 7.3 [Planned Development Districts] and 9.5 [Site Plan Review] of the Zoning Bylaws. The property is located in a Planned Development (PD-6) Zoning District; Assessor's Map 18, Lot 2B and Map 17, Lot 22.

The property was re-zoned to PD-6 at Annual Town Meeting in Spring 2022. Proposal is to raze two existing buildings to construct two new buildings with a connector and structured parking. Project will create new building for life science tenants.

The material submitted with this application can be found here: https://lexingtonma.viewpointcloud.com/records/64765

Planning staff memo attached.

SUGGESTED MOTION:

FOLLOW-UP:

DATE AND APPROXIMATE TIME ON AGENDA:

8/17/2022

ATTACHMENTS:

Description	Type
Planning Staff Memo	Cover Memo

TOWN OF LEXINGTON
PLANNING OFFICE

1625 Massachusetts Avenue
Lexington, Massachusetts 02420
Tel: 781-698-4560
planning@lexingtonma.gov
www.lexingtonma.gov/planning

Abby McCabe, Planning Director
Sheila Page, Assistant Director
Molly Belanger, Planner
Lori Kaufman, Department Assistant

To: **Lexington Planning Board**

From: **Sheila Page, Assistant Planning Director**

Re: **128 Spring Street/99 Hayden Avenue – Major Site Plan Review**

Date: **August 12, 2022**

Property Information	
Project Address	128 Spring Street, 95 Hayden Avenue (99 Hayden Avenue) The combined parcels are often referred to as 99 Hayden.
Parcel ID	Map 17, Lot 22 and Map 18 Lot 2B
Applicant/Owner Name	Hobbs Brook Real Estate, LLC
Type of Review	Major Site Plan Review

Important Dates/Timelines	
Filed with Town Clerk and Select Board	July 21, 2022
60-day Review Period Ends	September 19, 2022

Property Information	
Zoning District	PD-6 Approved 2022 ATM revised from: CD-14 approved 2009 ATM
Property Size	36 acres
Existing Conditions & Background History	The site currently contains an office and lab building complex, two parking garages, and associated surface parking and other site improvements that were developed beginning in the 1960s. Additional development for one new building was approved at the 2009 Annual Town Meeting as a new Planned Commercial District CD-14. That building was never built and both parcels have since been purchased by Hobbs Brook Real Estate. The site is bounded by Spring Street on the west and Hayden Avenue on the south. Another Planned Development District CD-2 abuts the site to the east and RO Residential District to the north.
Environmental Conditions	The project site is bordered by wetlands on the north and east sides. The site slopes steeply down from the center of the property toward the north, south and east and less steeply toward the west. Substantial ledge is present on the property. Many mature trees are present. There is a conservation restriction and trail easements on the northern and eastern portion of the property.

Project Summary

The project approved as PD-6 at ATM 2022 proposes to raze some existing buildings and construct two new buildings and a connector building, renovate existing buildings and construct an addition to an existing parking garage. The project will be constructed in three separate phases. Building 1 is proposed to be one floor of parking and 4 stories of lab/office and a penthouse. Building 2 is proposed to be three floors of parking and four floors of lab/office and a penthouse. Building 3 will be renovated. The project also includes adding a four-story addition to the parking garage and converting the existing lab space to parking garage.

The two new buildings are designed to serve life science tenants. The project proposes 328,850 sf of new building and 546 additional parking spaces. Upon project completion, there will be 757,261 square feet of lab/office and 1664 parking spaces. Because buildings and parking garages already exist on the site, it is confusing to follow the proposed changes. A detailed description of existing GFA, proposed GFA, razed GFA was provided during PSDUP process. The Applicant should update the table below. explaining existing, proposed PSDUP layout and proposed site plan review layout. The submitted Building Permit must substantially match the approved site plan review layout.

The project submission includes a LEED checklist showing compliance to LEED Gold certification.

Comments

Waiver Requests

- The applicant is requesting two waivers. The first is a waiver request from Section 12.3.6 of Chapter 176 - The Planning Board's Zoning Regulations which requires finished grades be no greater than 3:1 slope. The Applicant is requesting a waiver as earthwork will reveal ledge which will be exposed at a slope greater than 3:1.
- In addition, the Applicant is also requesting a waiver from Section 5.(2) of the Rules Adopted by the Lexington Conservation Commission due to a slight increase in stormwater 4874-0987-6254, v. 4 volume being generated by the 1-year storm. The Applicant will be applying to the Conservation Commission for a Notice of Intent to formally request this waiver.

The Project

- Because buildings and parking garages already exist on the site, it is confusing to follow the proposed changes. A detailed description of existing GFA, proposed GFA, razed GFA was provided during PSDUP process. The Applicant should update the table below to explain existing layout, proposed PSDUP layout, proposed site plan review layout and phasing. The Building Permit documents must substantially match the site plan review layout.

1/27/2021 **99 HAYDEN GROSS FLOOR AREAS**

		EXISTING	Phase 1 complete	Phase 2 Complete	Phase 3 Complete	
OFFICE/LAB BUILDINGS	Building A	17,955		(17,955)		
	Building B	22,486		(22,486)		
	Building C + D	143,662	143,662	143,662	159,000	15,338 OF NEW SF ON THE REHABBED BUILDING C/D
	Building E	12,589	(12,589)			
	Collab Building (house)	9,496		(9,496)		
	95 Hayden (office building)	222,204	222,204	222,204	222,204	
	New Building 1		155,500	155,500	155,500	
	New Building 2			187,000	187,000	
	New Connector				19,500	
	TOTAL	428,392	508,777	658,429	743,204	
STRUCTURED PARKING	95 Hayden Garage	196,060	196,060	196,060	196,060	
	99 Hayden Garage	113,126	113,126	113,126	113,126	
	99 Hayden Bldg E Backfill		12,589	12,589	12,589	
	99 Hayden Additional Garage Bay				53,753	
	Building 1 Garage Parking		36,960	36,960	36,960	
	Building 2 Garage Parking			117,792	117,792	
	TOTAL	309,186	358,735	476,527	530,280	
TOTAL GFA		737,578	867,512	1,134,956	1,273,484	
TOTAL NEW GFA			192,460	497,252	585,843	
RENOVATED GFA					143,662	
REMOVED GFA				(49,937)		
OFFICE GFA					222,204	
LAB GFA					521,000	

Lighting

- The MOU states that the Planning Board shall review and approve the lighting during site plan review. The MOU also states that the lighting will be dark sky compliant. We appreciate the low levels of lighting particularly on the perimeters. There appears to be excessive lighting in the vicinity of the X-shaped seating walls: noted at 21.1 and 19.4- and 21.6-foot candles. These seems to be outliers. Can these foot-candle outputs be reduced to fit with the surrounding area? Also, would the Applicant consider Lumens of 2700 instead of 3000 to be more wildlife friendly?
- On the top level of the parking garage, the lighting should be reduced to 1.0 ? There are several areas over 2.0. which is excessive for parking lot use.
- The MOU also says visibility of the interior lights will be reduced. How is this being done? A clear plan and schedule should be provided.
- Bright lighting is needed at the loading dock. Can the loading dock lights be reduced when not actively loading?
- The lighting hours is referenced the electrical document. Electrical documents are not required until building permit. Please provide a summary of the outdoor lighting schedule.
- Lighting levels is not provided in the court yard. The applicant requests flexibility. The final lighting for the courtyard can be reviewed by staff during building permit review.
- Cut sheets were not found.
- Do the fixtures have an international dark sky rating?

Engineering related items

- The swale along the west side of the parking garage drains into a catch basin. How is this catch basin connected to the drainage system?
- Internal crosswalks should have accessible ramps. Some ramps seem to be missing between building 1 and 2.
- The RRFB crosswalk infrastructure on Spring Street is not clear on the site plan. A landing pad is to be shown on both ends. An accessible ramp and crosswalk built should be built to Town Standards with Detectable pad yellow color and removable type https://www.lexingtonma.gov/DocumentCenter/View/550/MassDOT-Construction-Standards-for-Wheelchair-Ramps-and-Residential-Driveways-PDF . A road access permit will be required. Engineering will approve final design of crosswalk and equipment.
- Crosswalk should be continental style 18" wide by 6' long.
- The applicant proposes to add additional guardrail along Spring Street between the stone retaining wall and the existing guard rail to cut off old trail and divert hikers to the crosswalk. Additional guard rail may be more than necessary to divert hikers. Perhaps a wooden fence/guard to match what exists on the Takeda side of the street is sufficient, if approved by Engineering. A road access permit will be required for this work
- Please provide detail of porous pavement.
- Engineering will review stormwater and water and sewer usage and provide additional comments under separate cover.

Conservation

- Developer's project team has been in communication with conservation. A Notice of Intent filing for the drainage connection (since a waiver is necessary from full compliance with conservation regulations regarding volume due to soil and bedrock constraints) will be submitted after receiving initial Planning Board comments to incorporate any plan changes. In addition, the Conservation Commission has reviewed

and approved the trail extension to Spring Street via a Negative Determination of Applicability with conditions. The Conservation Commission will hold the expanded trail easement and Conservation Restriction per MOU conditions.

Earth Removal / Noise

- Documents provided show that 60,900 yards of earthwork will be removed. The applicant should provide details of the number of trips, timing and potential routing depending on where the fill is headed.
- There is considerable ledge work expected. A construction mitigation plan has been submitted. What is the expected method of ledge removal? Foundation surveys of nearby buildings prior to work is recommended. Copies of the notification letters and contact information should be provided to the Planning, Building and Health Offices.
- In addition, noise from generators and heaters particularly in the winter when generators are operating all night will need to be mitigated via appropriate sound barriers/jackets.

Traffic and Transportation

- The July 14, 2022 Transportation Impact and Access Study states

  The analyses presented in this TIAS are based on industry-standard trip rates published by the Institute of Transportation Engineers (ITE). The proposed redevelopment is estimated to generate approximately 339 trips (278 entering and 61 exiting) during the weekday morning peak hour and 322 trips (52 entering and 270 exiting) during the weekday evening peak hour. On a daily basis the Project is estimated to generate approximately 3,646 trips with half entering and half exiting over a 24-hour period. In comparison, the proposed Research and Development use of the site compared to the permitted office use estimated to generate approximately 145 additional trips (107 entering and 38 exiting) during the weekday morning peak hour and 131 additional trips (19 entering and 112 exiting) during the weekday evening peak hour. On a daily basis the Project is estimated to generate approximately 2,369 additional trips with half entering and half exiting over a 24-hour period.

- While the December 15, 2021 Transportation Impact and Access Study states:

  The analyses presented in this TIAS are based on industry-standard trip rates published by the Institute of Transportation Engineers (ITE). The proposed redevelopment is estimated to generate approximately 278 trips (228 entering and 50 exiting) during the weekday morning peak hour and 262 trips (42 entering and 222 exiting) during the weekday evening peak hour. On a daily basis the Project is estimated to generate approximately 2,990 trips with half entering and half exiting over a 24-hour period. In comparison, the proposed Research and Development use of the site compared to the permitted office use results in approximately 84 additional trips (57 entering and 27 exiting) during the weekday morning peak hour and 71 additional trips (9 entering and 64 exiting) during the weekday evening peak hour. On a daily basis the Project is estimated to generate approximately 1,713 additional trips with half entering and half exiting over a 24-hour period

- The volume of vehicles appears to be more than originally presented. It is also appears to not significantly impact traffic operations as the levels of service are estimated to be the same.
- Figure 4 and 5 say 2013 future build, this is likely a typo - should it be 2030? The PSDUP future build was to 2028. The estimates for future build in this application in a few cases seem to be quite different than what was shown is the PSDUP. The Applicant should provide an explanation as to the difference in the reports. The new report is based on slightly more GFA.
- The 2028 build conditions show estimates similar to the 2028 build conditions presented during the PSDUP phase.
- The baseline conditions diagram appears to be for a different site/project. Please check and revise if necessary.
- There was going to be an effort to have people use the Hayden Street entrance as the preferred entrance. How will this be communicated to the tenants and employees?

- Driveway Sight Lines. Any new plantings (shrubs, bushes) or physical landscape features to be located within the sight lines should also be maintained at a height of 2 feet or less above the adjacent roadway grade to ensure unobstructed lines of sight. Additionally, the proponent will relocate the existing stone wall adjacent to the Spring Street driveway to allow improved sight lines.
- The 128 BC shuttle currently stops at 95 Hayden. There are shuttle amenities provided at the new 97 Hayden building. Will there be shuttle stops at both 97 and 95 Hayden and the new building?
- The proposed parking ratio explained in the Transportation Impact and Access Study shows a parking ratio of 2.2 whereas the civil plan shows 2.75. Can this discrepancy be explained?
- The bicycle racks provided in the parking garage should be protected by bollards.
- Since the bike parking is not immediately adjacent to the entrance sharrows or bike lanes be striped to alert drivers to bicycles present.
- The bicycle parking spaces should be at least 2-foot by 6-foot which means for double sided racks there should be <u>at least</u> 4-feet between the racks. More is ideal to allow for maneuvering room between the racks
- The bicycle parking ratios and EV charging are based on total parking spaces. 110 bicycle parking spaces should be provided – only 80 spaces were found.
- Please show the location of the secure covered bicycle parking. Typically, these are rooms internal to the building or a limited access "cages" within the parking garage.
- Some bicycle parking should also be provided at the main entrance for couriers and visitors.
- Are shower and locker facilities provided? Where are they located?
- Where is zip car parking proposed?
- Where is bike share designated area? A conduit laid for future ride share racks.
- The location of the EV parking spots and the remaining EV ready spaces should be shown on the plans.
- The applicant is providing 22 EV charging spots. The applicant should plan to meet the provisions of Chapter 135 Section 5.1.13 (11) Electric vehicle charging. The required minimum applies to the total number of parking spaces. 4% of 1164 parking spaces equals 67.
- The annual PTDM monitoring shall also include an analysis of the estimated reduction of single occupancy vehicle trips.

Other Comments

- Per the MOU, the Applicant is required contribute funds to document and exhibit of property's historic role in innovation. Does any photographs or any other documentation need to take place before the building is demolished. Please coordination with the Historic Commission at the time of building permit.

- Tree removal and replacement information was not found. The applicant must comply with the Tree by-law Chapter 120. Any trees to be retained should be protected per the Tree Committee protection regulations. Any tree roots shall be cut as opposed to ripped.

- A prohibition of Temporary off-site construction parking on public, and unaccepted streets should be a condition of site plan approval. Explicit permission must be provided to park in private drives and parking lots.

2021 Aerial View

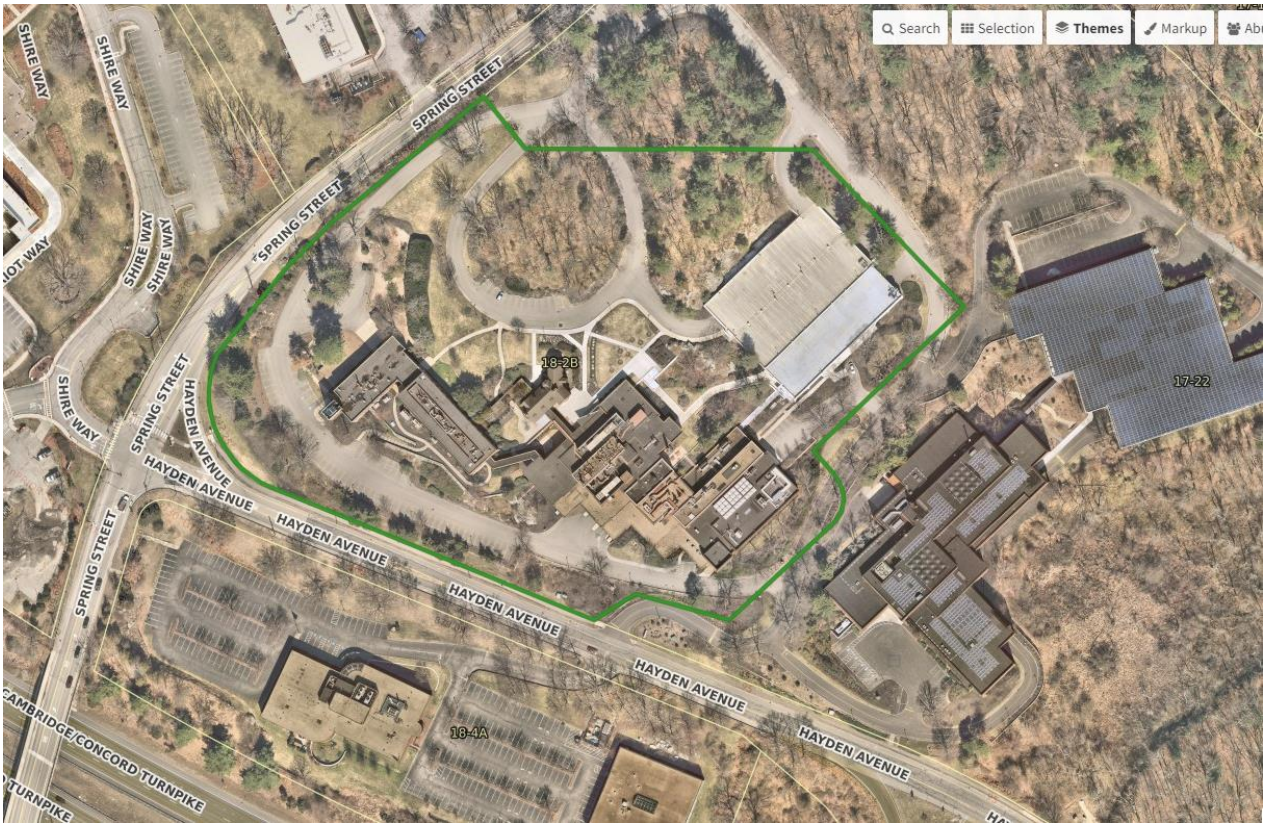

AGENDA ITEM SUMMARY

LEXINGTON PLANNING BOARD

AGENDA ITEM TITLE:

131 Hartwell Ave. – Acceptance of performance guarantee and endorse Definitive Subdivision Plan for subdivision approved on July 13, 2022

PRESENTER:

Staff and Applicant: 131 Hartwell Ave LLC

ITEM NUMBER:

SUMMARY:

Acceptance of performance guarantee and endorse Definitive Subdivision Plan for subdivision approved on July 13, 2022. Approved plan and Board's certificate of action is attached. The 20-day appeal period has passed.

SUGGESTED MOTION:

Move to accept the submitted covenant for the definitive subdivision at 131 Hartwell Ave. and sign the plan.

(board members will need to come to the office to sign please)

FOLLOW-UP:

DATE AND APPROXIMATE TIME ON AGENDA:

8/17/2022

ATTACHMENTS:

Description	Type
No Appeal Certificate	Exhibit
Approved Plans	Exhibit
Draft Covenant	Exhibit

Town of Lexington
Town Clerk's Office

Mary de Alderete, Town Clerk

Tel: (781) 698-4558
Fax: (781) 861-2754

Date: 8/8/2022

I hereby certify that twenty days have elapsed since the decision of the Planning Board on 7/13/2022:

Certificate of Action 131 Hartwell Ave

Which was filed on 7/18/2022, in the office of the Town Clerk. No appeal was filed in the office of the Town Clerk within the 20-day period.

Attest:

Mary de Alderete
Town Clerk

1625 MASSACHUSETTS AVENUE • LEXINGTON, MASSACHUSETTS 02420

#369

RECEIVED

2022 18 Jul, 4:08 pm

TOWN CLERK
LEXINGTON MA

Town of Lexington
PLANNING BOARD
1625 Massachusetts Avenue
Lexington, MA 02420
Tel (781) 698-4560
planning@lexingtonma.gov
www.lexingtonma.gov/planning

Robert D. Peters, Chair
Michael Schanbacher, Vice Chair
Melanie Thompson, Clerk
Robert Creech, Member
Charles Hornig, Member
Michael Leon, Associate Member

TRUE COPY ATTEST

TOWN CLERK
LEXINGTON, MA

DECISION OF THE LEXINGTON PLANNING BOARD
DEFINITIVE SUBDIVISION Non-Residential Subdivision of Land

CERTIFICATE OF VOTE
131 Hartwell Avenue
(Assessor's Map 74, Lot 6A)

Date of Application: May 19, 2022
Date of Public Hearing: July 13, 2022
Date of Vote: July 13, 2022

DECISION

This is to certify that the Lexington Planning Board, acting within the provisions of M.G.L., Chapter 41, § 81U, at a meeting on July 13, 2022, by a vote of five (5) members in favor and none (0) opposed, conditionally approved the Definitive Subdivision plan for a three (3) lot subdivision at 131 Hartwell Avenue as shown on the plans entitled "Definitive Non-Residential Subdivision of Land, 131 Hartwell Avenue (Map 74 Lot 6A) Lexington, MA", dated May 19, 2022, prepared by Allen & Major Associates, INC., consisting of 14 sheets including the cover page, filed with the Planning Department on May 19 2022; subject to the terms and conditions of approval and the covenant to be given in said Section 81U and subject to the following terms and conditions imposed by the Lexington Planning Board.

PROJECT SUMMARY AND BACKGROUND

Application proposes three lots on a subdivision cul-de-sac with a 26 ft. wide drive, landscaped center island, sidewalk, street trees, one new fire hydrant, and a subsurface infiltration stormwater management system. Presently the ~5-acre property contains a three-story brick building and off-street surface parking.

A preliminary subdivision application was approved by the Planning Board on October 20, 2021.

STATEMENT OF FINDINGS

After having reviewed all the plans and reports filed by the Applicant and its representatives, and having considered the technical analysis, supplemental information provided during the course of the public hearing, correspondence and testimony from representatives from various boards, commissions, departments within Lexington, members of the public, and from all other interested parties, the Lexington Planning Board makes the following procedural findings and project findings:

RECEIVED
2022 18 Jul, 4:08 pm
TOWN CLERK
LEXINGTON MA

Procedural Findings:

1. On May 19, 2022, an application was filed by or on behalf of 131 Hartwell LLC (hereinafter referred to as the "Applicant") with the Lexington Planning Board through the View Point Cloud Permit system as PLAN-22-7 (hereinafter "Application") pursuant to M.G.L. Chapter 41, Section 81, and the Rules and Regulations Governing the Subdivision of Land in Lexington, Chapter 175, last revised on August 30, 2017.

2. Pursuant to M.G.L. Chapter 41, Sections 81K through 81GG (hereinafter "Subdivision Control Law"), and the applicable provisions of the Rules and Regulations, the Planning Board caused notice of the public hearing to be published in the Lexington Minuteman, a newspaper of general circulation in Lexington, on June 9, 2022 and again on June 16, 2022. Notice of the public hearing was posted in the Lexington office of the Town Clerk on June 15, 2022 and continuing through the opening of the public hearing on July 13, 2022. Said notice of the public hearing was mailed postage prepaid to the applicant, property owner, and all abutters as prescribed in the Subdivision Control Law on June 15, 2022.

3. The Planning Board provided copies of the Application to other Lexington departments and officials, including, but not limited to, the Health Director/Assistant Director, Building Commissioner, Conservation Director, Assistant Town Engineer, Police Chief, Assistant Fire Chief, and Zoning Administrator.

4. The Board of Health filed their report to approve with no concerns on the Definitive Subdivision on May 10, 2022, pursuant to M.G.L. Chapter 41, Section 81U.

5. After notice and publication was provided pursuant to the applicable provisions of the Subdivision Control Law and the Board's Rules and Regulations, the public hearing on the Application commenced on July 13, 2022, on which date the Planning Board closed the public hearing. All Planning Board meetings and the public hearings were held remotely via Zoom, pursuant to c. 20 of the Acts of 2021 and c. 22 of the Acts of 2022 further extending the remote provisions until July 15, 2022. The Planning Board accepted public comments via Zoom.

6. Lexington Planning Board members Robert Peters, Michael Schanbacher, Melanie Thompson, Robert Creech, and Charles Hornig were present for all public hearings at which testimony was taken.

Project Findings:

1. The subject property consists of one ~5-acre parcel of land shown on the Lexington Assessors' Map as 74, Lot 6A and located in the CM (Commercial Manufacturing) zoning district.

2. The Applicant proposes to divide the existing lot into three lots on a subdivision cul-de-sac with a 26 ft. wide drive, landscaped center island, sidewalks, street trees, one new fire hydrant, and a subsurface infiltration stormwater management system. The existing buildings and parking areas are to be removed.

3. On October 12, 2021, the Applicant filed a Preliminary Subdivision application with the Town Clerk. The Lexington Planning Board voted to approve the Preliminary Subdivision with conditions on October 12, 2021, and issued a Preliminary approval on October 22, 2021. The land shown on this

TRUE COPY ATTEST
TOWN CLERK
LEXINGTON, MA

RECEIVED
2022 18 Jul, 4:08 pm
TOWN CLERK
LEXINGTON MA

definitive subdivision plan will be governed by the zoning bylaw in effect on October 12, 2021 for eight years from the date of endorsement of this definitive plan.

4. The Development, as modified by the conditions of this decision, will not present a public safety hazard to the town, or the surrounding properties.

WAIVERS

The Planning Board waived strict compliance with its Rules and Regulations finding the following two waivers are in the public interest and not inconsistent with the intent and purpose of the Subdivision Control Law.

1. The Applicant requested a waiver for §175-6.1D(2) of the Town Code for Soil Surveys, Test Pits, and Test Borings. The Applicant requested the required test pits and test borings be provided as a condition of approval.
2. The Applicant also requested a waiver for §175-6.1D(11)(b) of the Town Code for an agreement allocating the responsibility for costs and maintenance among owners. The Applicant requested the required agreement be provided as a condition of approval.

CONDITIONS

After the public hearing, the Lexington Planning Board by a vote of five (5) in favor and none (0) opposed, voted to approve the Definitive Subdivision for 131 Hartwell Avenue as described above and on plans entitled "Plans for Definitive Subdivision of Land 131 Hartwell Avenue, Lexington, prepared by Allen & Major Associates, Inc., revised through July 12, 2022, subject to the following conditions:

Prior to Plan Endorsement:

1. Prior to endorsement of the Definitive Plan, the Applicant shall provide a Performance Guarantee, in a manner acceptable to the Planning Board, and prior to the release of any lot or the issuance of any building permits for the construction of any buildings, to insure the required improvements related to the construction of the road and services will be constructed and installed in accordance with the approved Definitive Plan.

2. After notice from the Town Clerk of "No Appeal", the Applicant shall submit the final revised Definitive Subdivision Plan set including the Property Rights and Dimensional Standards Plan and the Street Layout and Profile Plan sheets, for endorsement by the Planning Board within 180 days of this approval in accordance with this Certificate of Vote. The Applicant shall record with the Registry and notify the Board in writing of the date, book, and page or document of the recording information. Failure to do so may result in recission of this Decision.

3. Following endorsement and prior to commencing any site work or construction related to this approval, the certificate of vote and any easements (including utility easements) and covenants must be recorded at the Registry. Proof of recording the Definitive Subdivision Plan at the South Middlesex Country Registry of Deeds shall be submitted to the Lexington Planning Department.

TRUE COPY ATTEST
TOWN CLERK
LEXINGTON, MA

RECEIVED
2022 18 Jul, 4:08 pm
TOWN CLERK
LEXINGTON MA

4. All easement documents shall be provided to the Planning Board, staff, and Town Counsel for review and approval prior to recording at the Registry.

General Provisions Prior to Any Site Work and Construction:

5. If the Project, or any condition imposed by this decision, requires a permit, license, or other approval from any other board, committee or agency of Lexington or other regulatory agency of the Commonwealth or the Federal government such as MassPort or FAA, the Applicant is responsible for filing the appropriate application. As proposed, Applicant is responsible for filing stormwater permits with Engineering. If any condition of such permit is inconsistent with or modifies the approved Project Plans the Applicant shall make application to the Planning Board for amendment of this Decision, and the Planning Board shall consider such application in accordance with the requirements of M.G.L. Chapter 41, §81T & §81W and all applicable Planning Board Subdivision Regulations.

During Construction:

6. Project related construction shall comply with the Lexington's General Bylaws Chapter 80 [Noise Control], for construction related activities with hours limited to 7:00 a.m. and 5:00 p.m. Monday through Friday and between 9:00 am and 5:00 pm on Saturdays. Operation is not permitted on Sundays and legal holidays.

7. The Department of Public Works shall be notified at least forty-eight hours in advance of any roadway construction, installation of municipal service, and backfill of any underground utilities for inspections or utility connections.

8. Applicant shall perform daily clean up of construction debris, including soil on municipal streets within two-hundred yards from the entrance of the site drive caused by construction related to the project.

9. Construction and land disturbance activities, soil erosion and sedimentation to wetlands or resources areas shall be minimized by an active program meeting the requirements of the Lexington Conservation Commission, Department of Environmental Protection Best Management Practices, and the Stormwater Management Permit.

10. Applicant shall provide appropriate erosion control methods such as silt fences and straw wattles and organic hessian fabric burlap filled with compost and the stockpiles in case of a storm event, in addition to dust control requirements.

11. The Applicant is responsible for promptly repairing any damage caused to street pavement, signs, or other fixtures or features within the public right-of-way, after obtaining permission from the Department of Public Works. Such repairs shall be performed to Lexington Standards.

12. A copy of this Decision and the Project Plans shall be kept on the Project Site in a highly visible location at all times during construction.

Continuing Conditions:

TRUE COPY ATTEST
TOWN CLERK
LEXINGTON, MA

RECEIVED
2022 18 Jul, 4:08 pm
TOWN CLERK
LEXINGTON MA

13. Except as modified by the conditions and findings hereof, the Project shall comply with the final revised approved Definitive Plan Set, in all respects, and the Applicant shall pursue completion of the project with reasonable diligence and continuity. The subdivision and its construction shall comply in all respects to the Subdivision Rules and Regulations unless specifically waived by a vote of the Planning Board and recorded in writing.

14. This approval is limited to a total of three (3) lots, regardless of the number of lots which could otherwise be developed and the road may not be extended without returning to the Planning Board for an amendment or modification pursuant to M.G.L. Chapter 41, § 81W. Further division of any lot created hereon, whether by ANR or any other method, is expressly prohibited, except that lots may be reconfigured, such that the total number of lots does not exceed three (3) lots. Any change in roadway or increase in number of lots requires a new subdivision filing, pursuant to §81T & §81W.

15. The Town is not responsible for non-emergency municipal services provided along the new road, including snow removal and recycling/trash service, until street acceptance by Town Meeting.

16. Planning staff and members of the Planning Board and its agents shall be permitted access to the Project Site during construction with proper notification to the Applicant (and subject to any construction safety requirements), and shall have the right to gather all information, measurements, photographs or other materials needed to ensure compliance with the terms of this Decision, subject to applicable safety requirements.

17. A final as-built plan shall be submitted to the Planning Office, Engineering, and Building Commissioner prior to issuance of the Completion Certificate or release of the Performance Guarantee. The as-built plan shall be prepared and certified by a professional engineer and submitted as a PDF and CAD file. The "As Built" Plan shall indicate the stormwater system, parking, driveways, sidewalks and walkways, utilities, any lighting, storm drains, water mains and their appurtenances, etc. in material compliance with the approved project plans.

18. Any future change, modification or amendment to the final Definitive Plan as may be approved by the Planning Board shall be in accordance with the requirements of M.G.L. Chapter 41, § 81T & §81W and § 6.7 of the Board's Subdivision Regulations. No material alterations, or any changes shall be made in any plans, proposals or supporting documents, or site work without prior written approval from the Planning Board or their designee. Any request for a modification of this approval shall be made in writing the Planning Department for review and approval by the Planning Board and shall include a description of the proposed modification, reasons the modification is necessary, and any supporting documentation. Upon receipt of a request, the Planning Department may, in the first instance, authorize a minor modification to the site plans, or Planning staff may refer the matter to the Planning Board, which may consider and approve minor modifications at a regularly scheduled Planning Board meeting duly noticed. In the event the Board determines the change is major in nature (resulting in material changes such as newly impacted parcels), the Board shall consider the modification at a properly noticed public hearing.

19. The Applicant must complete construction of all ways and services within two (2) years of the date of Planning Board endorsement of the definitive plan. Failure to do so may result in the rescission of the approval of such plan, unless the Board extends said period, for good cause shown, after the written request of the Applicant not less than 20 days before the expiration of said period.

TRUE COPY ATTEST
TOWN CLERK
LEXINGTON, MA

RECEIVED
2022 18 Jul, 4:09 pm
TOWN CLERK
LEXINGTON MA

20. Construct Streets and All Required Utilities. As a condition of approval of a subdivision, the applicant agrees to construct streets and complete all other work specified on the definitive plan or required under these Regulations, meet all relevant provisions of the Zoning Bylaw and other bylaws, including installation of required utilities in such subdivision, and all work incidental to them, such as grading of lots to provide drainage, construction of retaining walls and other details or as specifically required by the Board.

21. Applicant/owner is responsible for maintaining the landscaping, streets, and utilities within the subdivision until formally accepted by the Town. The owner must provide a supplemental covenant agreeing to maintain the streets and utilities, including snow removal, and permitting the Town to maintain them if necessary at the expense of the owners. Any trees and landscaping that does not survive must be replaced in-kind within the first available growing season.

22. Soil Surveys, Test Pits, and Test Borings. The Applicant shall conduct the required test pits and test borings and submit the results to the Planning Office per §175-6.1D(2) of the Town Code for Soil Surveys, Test Pits, and Test Borings prior to the approval of a building permit.

23. The Applicant shall submit an agreement allocate responsibility for costs and maintenance among owners to the Planning Office per §175-6.1D(11)(b) of the Town Code prior to the approval of a building permit.

24. Perpetual Rights and Easements.

    a. As a condition of approval of a subdivision, the owner must grant to the Town a right and easement to construct, repair, replace, extend, operate, use and forever maintain all water mains, sewer mains, and all surface and subsurface stormwater drains in, through or under the streets and easements as indicated on the definitive plan.

    b. In consideration of being allowed to connect to the public street system and to enable the Town to protect public health and safety, the owner must grant the Town the perpetual right or easement to pass and repass over the streets and easements in the subdivision, and to use, operate, inspect, repair, renew, replace, and forever maintain the streets, street signs, and all appurtenances or components of them, in all of the subdivision and outside it if installed to serve the subdivision. To accomplish this, the owner must retain and reserve the necessary rights and easements in any conveyances or mortgaging of land or lots and in the recording of plans and easements.

    c. The owners must grant the Town the right to enforce on-street parking regulations within the subdivision and on any streets connecting the subdivision to the public street system. For projects that include minor streets, an instrument prohibiting parking and granting the Town enforcement rights will be required.

TRUE COPY ATTEST
Heydi Alduete
TOWN CLERK
LEXINGTON, MA

RECEIVED
2022 18 Jul, 4:09 pm
TOWN CLERK
LEXINGTON MA

APPLICATION AND PLANS

The Planning Board evaluated the Application filed by or on behalf of the Applicants in the Planning Department on May 19, 2022 and through the close of the public hearing and the following material associated with this application.

1. Form B- Application, dated May 9, 2022
2. Pre-Filing Letter, written by Carlton M. Quinn, dated May 13, 2022
3. Cover Letter, written by Carlton M. Quinn, dated May 19, 2022
4. Definitive Non-Residential Subdivision Plan Set;
    a. Cover Sheet: titled "Definitive Non-Residential Subdivision of Land, 131 Hartwell Avenue (Map 74 Lot 6A), Lexington, MA", prepared by Allen & Major Associates, INC., prepared for 131 Hartwell LLC, signed and stamped by Carlton M. Quinn, Registered Engineer No.49923, dated May 19, 2022, revised July 12, 2022
    b. Sheet V-101: titled "Site Analysis Map", prepared by Allen & Major Associates, INC., prepared for 131 Hartwell LLC, signed and stamped by Norman I. Lipsitz, Land Surveyor No.28446, dated October 6, 2021
    c. Sheet C-001: titled "Abbreviations and Notes", prepared by Allen & Major Associates, INC., prepared for 131 Hartwell LLC, signed and stamped by Carlton M. Quinn, Registered Engineer No.49923, dated May 19, 2022, revised July 12, 2022
    d. Sheet C-002: titled "Abbreviations and Notes", prepared by Allen & Major Associates, INC., prepared for 131 Hartwell LLC, and stamped by Carlton M. Quinn, Registered Engineer No.49923, dated May 19, 2022, revised July 12, 2022
    e. Sheet C-102: titled "Property Rights and Dimensional Standards Plan", prepared by Allen & Major Associates, INC., prepared for 131 Hartwell LLC, signed and stamped by Carlton M. Quinn, Registered Engineer No.49923, dated May 19, 2022, revised July 12, 2022
    f. Sheet C-103: titled "Site Construction Plan", prepared by Allen & Major Associates, INC., prepared for 131 Hartwell LLC, signed and stamped by Carlton M. Quinn, Registered Engineer No.49923, dated May 19, 2022, July 12, 2022
    g. Sheet C-104: titled "Street Layout and Profile Plan", prepared by Allen & Major Associates, INC., prepared for 131 Hartwell LLC, signed and stamped by Carlton M. Quinn, Registered Engineer No.49923, dated May 19, 2022, July 12, 2022
    h. Sheet C-105: titled "Utilities Plan", prepared by Allen & Major Associates, INC., prepared for 131 Hartwell LLC, signed and stamped by Carlton M. Quinn, Registered Engineer No.49923, dated May 19, 2022, July 12, 2022
    i. Sheet C-501: titled "Details", prepared by Allen & Major Associates, INC., prepared for 131 Hartwell LLC, signed and stamped by Carlton M. Quinn, Registered Engineer No.49923, dated May 19, 2022, July 12, 2022
    j. Sheet C-502: titled "Details", prepared by Allen & Major Associates, INC., prepared for 131 Hartwell LLC, signed and stamped by Carlton M. Quinn, Registered Engineer No.49923, dated May 19, 2022, revised July 12, 2022

TRUE COPY ATTEST
Maydi Aldrete
TOWN CLERK
LEXINGTON, MA

RECEIVED
2022 18 Jul, 4:09 pm
TOWN CLERK
LEXINGTON MA

k. Sheet C-503: titled "Details", prepared by Allen & Major Associates, INC., prepared for 131 Hartwell LLC, signed and stamped by Carlton M. Quinn, Registered Engineer No.49923, dated May 19, 2022, revised July 12, 2022
l. Sheet C-504: titled "Details", prepared by Allen & Major Associates, INC., prepared for 131 Hartwell LLC, signed and stamped by signed and stamped by Carlton M. Quinn, Registered Engineer No.49923, dated May 19, 2022, revised July 12, 2022
m. Sheet L-101: titled "Landscape Plan", prepared by Allen & Major Associates, INC., prepared for 131 Hartwell LLC, signed and stamped by Jacqueline B. Trainer, Landscape Architect No.1526, dated May 19, 2022, revised July 12, 2022
n. Sheet L-501: titled "Landscape Details", prepared by Allen & Major Associates, INC., prepared for 131 Hartwell LLC, signed and stamped by Jacqueline B. Trainer, Landscape Architect No.1526, dated May 19, 2022, revised July 12, 2022.

5. Drainage and Stormwater Management Plan, prepared by Allen & Major Associates, INC., prepared for 131 Hartwell, LLC., dated May 19, 2022
6. Form W-Waiver Request Form, received May 19, 2022
7. Draft Covenant, received May 19, 2022
8. Recorded Deed of 131 Hartwell Avenue
9. Preliminary Planning Board decision, stamped by the Town Clerk on October 22, 2022
10. Certified Abutters List
11. Application Fee
12. Memorandum from Assistant Town Engineer Ross Morrow to Planning Director, Subject: 131 Hartwell Comments, dated July 8, 2022.
13. Planning Memo from Planner Molly Belanger to Planning Board, dated July 8, 2022.

RECORD OF VOTE

The following members of the Planning Board voted to grant the certificate of action, subject to above stated terms and conditions: Robert Peters, Michael Schanbacher, Melanie Thompson, Robert Creech, and Charles Hornig.

The following members of the Planning Board voted to disapprove the certificate of action: none.

Robert D. Peters

July 18, 2022

Robert Peters, Chair — Date

TRUE COPY ATTEST
Maydi Alderete
TOWN CLERK
LEXINGTON, MA

PLANS FOR DEFINITIVE
NON-RESIDENTIAL SUBDIVISION OF LAND
131 HARTWELL AVENUE
(MAP 74 LOT 6A)
LEXINGTON, MA

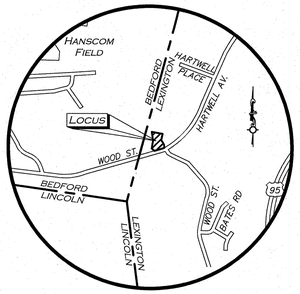

LOCUS MAP
(NOT TO SCALE)

APPLICANT / OWNER:
131 HARTWELL LLC
131 HARTWELL AVENUE
LEXINGTON, MA 02421
781.698.9089

SITE CIVIL ENGINEER/LAND SURVEYOR:
ALLEN & MAJOR ASSOCIATES, INC.
100 COMMERCE WAY, SUITE 5
WOBURN, MA 01801
781.935.6889

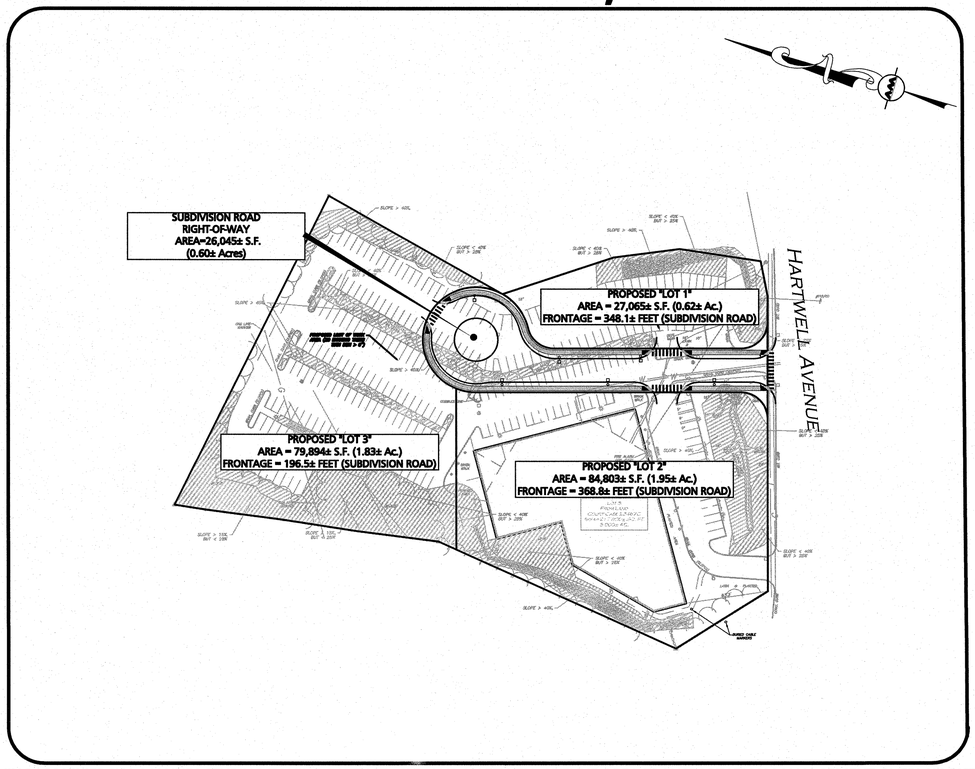

SITE ZONING: COMMERCIAL MANUFACTURING ZONING DISTRICT (CM) AND HARTWELL AVENUE AREA TRANSPORTATION MANAGEMENT OVERLAY DISTRICT

APPROVED BY:
TOWN OF LEXINGTON PLANNING BOARD

_____
_____
_____
_____
_____

DATE: _____

THIS PLAN IS SUBJECT TO A COVENANT DATED _____

THIS PLAN IS SUBJECT TO A CERTIFICATE OF ACTION DATED _____

THIS PLAN IS SUBJECT TO A SPECIAL PERMIT DATED _____

I _____, TOWN CLERK OF THE TOWN OF LEXINGTON, MASSACHUSETTS HEREBY CERTIFY THAT THE NOTICE OF APPROVAL OF THIS PLAN HAS BEEN RECEIVED AND RECORDED AT THIS OFFICE AND NO NOTICE OF APPEAL WAS RECEIVED DURING THE TWENTY DAYS NEXT AFTER SUCH RECEIPT AND RECORDING OF SAID NOTICE.

_____ _____
TOWN CLERK DATE

COMMONWEALTH OF MASSACHUSETTS
CARLTON M. QUINN
CIVIL
No. 49923
REGISTERED PROFESSIONAL ENGINEER

7.12.22

PROFESSIONAL ENGINEER FOR
ALLEN & MAJOR ASSOCIATES, INC.

LIST OF DRAWINGS

DRAWING TITLE	SHEET NO.	ISSUED	LAST REVISED
SITE ANALYSIS MAP	V-101	05-19-2022	07/12/2022
ABBREVIATIONS AND NOTES	C-001 - C-002	05-19-2022	———
PROPERTY RIGHTS AND DIMENSIONAL STANDARDS PLAN	C-102	05-19-2022	———
SITE CONSTRUCTION PLAN	C-103	05-19-2022	07-12-2022
STREET LAYOUT AND PROFILE PLAN	C-104	05-19-2022	07-12-2022
UTILITIES PLAN	C-105	05-19-2022	———
DETAILS	C-501 - C-504	05-19-2022	———
LANDSCAPE PLAN	L-101	05-19-2022	———
LANDSCAPE DETAILS	L-501	05-19-2022	———

GRAPHIC SCALE
80 0 40 80 160 320
(IN FEET)
1 inch = 80 ft.

PREPARED BY:
ALLEN & MAJOR ASSOCIATES, INC.
civil & structural engineering ◆ land surveying
environmental consulting ◆ landscape architecture
www.allenmajor.com
100 COMMERCE WAY; SUITE 5
WOBURN MA 01801
TEL: (781) 935-6889
FAX: (781) 935-2896
WOBURN, MA ◆ LAKEVILLE, MA ◆ MANCHESTER, NH

NON-RESIDENTIAL DEFINITIVE SUBDIVISION PLANS
ISSUED TO PLANNING BOARD: MAY 19, 2022
REVISED PER TOWN COMMENT: JULY 12, 2022

N:\PROJECTS\3048-01\CIVIL\DRAWINGS\CURRENT\C-3048-01_COVER SHEET - DEF.DWG

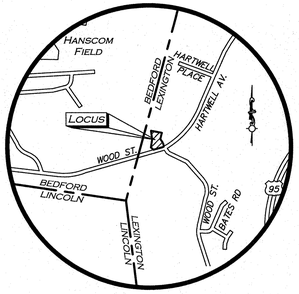

LOCUS MAP

(NOT TO SCALE)

LOCUS REFERENCES

- TOWN OF LEXINGTON ASSESSORS MAP 74, LOT 6A
- CERTIFICATE OF TITLE NO. 269840
- LAND COURT CASE 23467C
- OWNER OF RECORD: 131 HARTWELL, LLC

NOTES

1. NORTH ARROW IS TAKEN LAND COURT CASE 23467C.
2. PROPERTY LINE AND EXISTING SITE CONDITIONS INFORMATION SHOWN HEREON IS TAKEN FROM A PLAN ENTITLED "ALTA/NSPS LAND TITLE SURVEY – 131 HARTWELL AVENUE IN LEXINGTON, MASSACHUSETTS (MIDDLESEX COUNTY)", DATED FEBRUARY 11, 2019, PREPARED BY BSC GROUP, PREPARED FOR PARSADA VENTURES, AND PROVIDED TO ALLEN & MAJOR ASSOCIATES BY AZAD LEGACY PARTNERS. THE INFORMATION SHOWN IS SUBJECT TO FIELD VERIFICATION AND MAY BE UPDATED AS NEEDED.
3. BOOK/PAGE AND PLAN REFERENCES ARE TAKEN FROM MIDDLESEX (SOUTH) REGISTRY OF DEEDS IN CAMBRIDGE, MA.
4. VERTICAL DATUM IS NAVD 88.
5. CONTOUR INTERVAL IS ONE FOOT (1').
6. CONTOURS SHOWN HEREON HAVE BEEN GENERATED FROM LIDAR DATA OBTAINED FROM THE NATIONAL OCEANIC AND ATMOSPHERIC ADMINISTRATION (NOAA).

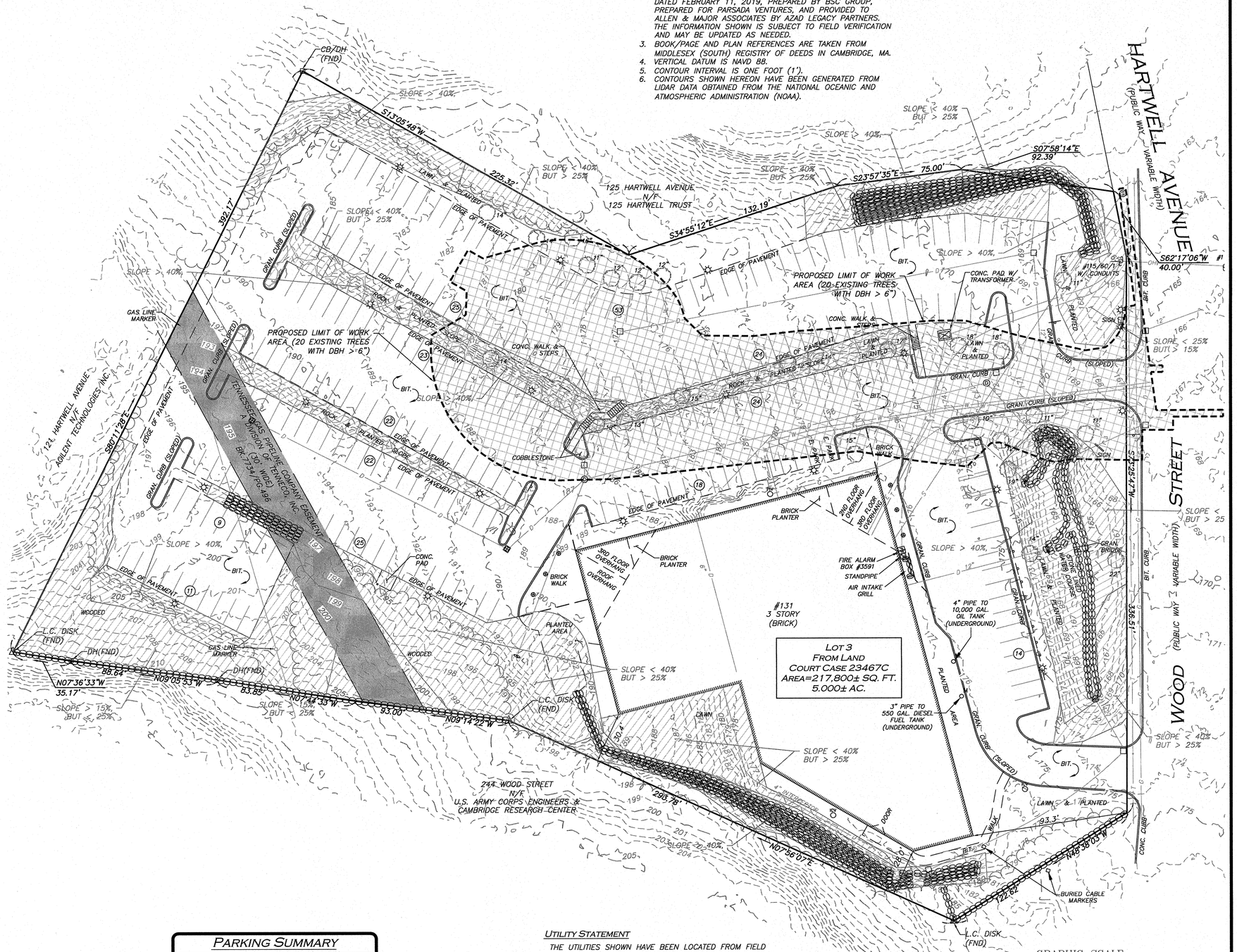

LEGEND

CONCRETE BOUND (CB)	
DRILL HOLE (DH)	
LAND COURT DISK	
DRAIN MANHOLE (DMH)	
SEWER MANHOLE (SMH)	
CATCH BASIN (CB)	
ROUND CATCH BASIN (RCB)	
FIRE STANDPIPE	
WATER GATE	
FIRE ALARM BOX	
IRRIGATION CONTROL VALVE	
INVERT (INV)	
LIGHT	
SIGN	
POSITION INDICATOR VALVE	
TRANSFORMER	
HANDICAPPED PARKING SPACE	
BOLLARD	
PARKING SPACE COUNT	16
RIP-RAP	
BUILDING	
BUILDING OVERHANG	
EASEMENT LINE	
STONE WALL	
1' CONTOUR	118
5' CONTOUR	120
PROPERTY LINE	
ABUTTERS LINE	
EDGE OF PAVEMENT	
CURB	
CHAIN LINK FENCE	x
STOCKADE FENCE	
WATER LINE	W
SEWER LINE	S
DRAIN LINE	D
GAS LINE	G
ELECTRIC LINE	E
TELEPHONE LINE	T
BITUMINOUS	BIT.
CONCRETE	CONC.
GRANITE	GRAN.
CONC. BOUND W/DRILL HOLE	CB/DH
FOUND	FND
NOW OR FORMERLY	N/F
BOOK	BK.
PAGE	PG.
LAND COURT	L.C.
LAND COURT CASE	L.C.C.

PARKING SUMMARY

STANDARD STALLS	270
HANDICAPPED STALLS	4
TOTAL STALLS	274

UTILITY STATEMENT

THE UTILITIES SHOWN HAVE BEEN LOCATED FROM FIELD SURVEY INFORMATION AND EXISTING DRAWINGS. ALLEN & MAJOR ASSOCIATES, INC. (A&M) MAKES NO GUARANTEE THAT THE UTILITIES SHOWN HEREON COMPRISE ALL SUCH UTILITIES IN THE AREA, EITHER IN SERVICE OR ABANDONED. A&M FURTHER DOES NOT WARRANT THAT THE UTILITIES SHOWN ARE IN THE EXACT LOCATION INDICATED. A&M HAS NOT PHYSICALLY LOCATED THE UNDERGROUND UTILITIES.

N:\PROJECTS\3048-01\SURVEY\DRAWINGS\CURRENT\S-3048-01-EC - DEF.DWG

M 04/19/2022
PROFESSIONAL LAND SURVEYOR FOR
ALLEN & MAJOR ASSOCIATES, INC.

COMMONWEALTH OF MASSACHUSETTS
NORMAN I. LIPSITZ
No. 28446
PROFESSIONAL LAND SURVEYOR
5/19/22

REV	DATE	DESCRIPTION

APPLICANT\OWNER:

AZAD LEGACY PARTNERS
131 HARTWELL AVENUE
LEXINGTON, MA 02421

PROJECT:

131 HARTWELL AVENUE
LEXINGTON, MA

PROJECT NO.	3048-01	DATE:	10/06/2021
SCALE:	1" = 30'	DWG. NAME:	S-3048-01-EC
DRAFTED BY:	KAC	CHECKED BY:	NIL

PREPARED BY:

ALLEN & MAJOR ASSOCIATES, INC.
civil engineering ◆ land surveying
environmental consulting ◆ landscape architecture
www.allenmajor.com
100 COMMERCE WAY
WOBURN MA 01801-8501
TEL: (781) 935-6889
FAX: (781) 935-2896
WOBURN, MA ◆ LAKEVILLE, MA ◆ MANCHESTER, NH

THIS DRAWING HAS BEEN PREPARED IN DIGITAL FORMAT. CLIENT/CLIENT'S REPRESENTATIVE OR CONSULTANTS MAY BE PROVIDED COPIES OF DRAWINGS AND SPECIFICATIONS FOR HIS/HER INFORMATION AND/OR SPECIFIC USE ON THIS PROJECT. DUE TO THE POTENTIAL THAT THE PROVIDED INFORMATION MAY BE MODIFIED UNINTENTIONALLY OR OTHERWISE, ALLEN & MAJOR ASSOCIATES, INC. MAY REMOVE ALL INDICATION OF THE DOCUMENT'S AUTHORSHIP ON THE DIGITAL MEDIA. PRINTED REPRESENTATIONS OR PORTABLE DOCUMENT FORMAT OF THE DRAWINGS AND SPECIFICATIONS ISSUED SHALL BE THE ONLY RECORD COPIES OF ALLEN & MAJOR ASSOCIATES, INC.'S WORK PRODUCT.

DRAWING TITLE:

SITE ANALYSIS PLAN

SHEET No.

V-101

Copyright©2021 Allen & Major Associates, Inc.
All Rights Reserved

NOTES

GENERAL NOTES:

1. PROPERTY LINE AND EXISTING SITE CONDITIONS INFORMATION SHOWN HEREON IS TAKEN FROM A PLAN ENTITLED "EXISTING CONDITIONS", DATED OCTOBER 6, 2021, PREPARED BY ALLEN & MAJOR ASSOCIATES (A&M).
2. VERTICAL DATUM IS NAVD 88.
3. ZONING DISTRICT IS COMMERCIAL MANUFACTURING (CM) AND HARTWELL AVENUE AREA TRANSPORTATION MANAGEMENT OVERLAY DISTRICT (TMOD).
4. OVERALL LOT SIZE: 5.000± ACRES (217,800± SQ. FT.)
5. DURING CONSTRUCTION, ALL VEHICLES MUST BE PARKED ON SITE.
6. DURING CONSTRUCTION, ALL STAGING AND DELIVERIES WILL OCCUR ON SITE.
7. THIS PROJECT WILL BE SERVED BY PUBLIC WATER AND SEWER AND PRIVATE, NATURAL GAS, TELEPHONE, CABLE AND ELECTRIC. ALL UTILITY LINES WILL BE INSTALLED UNDERGROUND UNLESS OTHERWISE NOTED.
8. THE CONTRACTOR IS SPECIFICALLY CAUTIONED THAT THE LOCATION AND/OR ELEVATION OF EXISTING UTILITIES AND STRUCTURES AS SHOWN ON THESE PLANS IS BASED ON RECORDS OF VARIOUS UTILITY COMPANIES AND WHERE POSSIBLE, MEASUREMENTS TAKEN IN THE FIELD. THIS INFORMATION IS NOT TO BE RELIED ON AS BEING EXACT OR COMPLETE. THE LOCATION OF ALL UNDERGROUND UTILITIES AND STRUCTURES SHALL BE VERIFIED IN THE FIELD BY THE CONTRACTOR PRIOR TO THE START OF CONSTRUCTION. THE CONTRACTOR MUST CONTACT THE APPROPRIATE UTILITY COMPANY, ANY GOVERNING PERMITTING AUTHORITY, AND "DIGSAFE" AT LEAST 72 HOURS PRIOR TO ANY EXCAVATION WORK TO REQUEST EXACT FIELD LOCATION OF UTILITIES AND THE ENGINEER SHALL BE NOTIFIED IN WRITING OF ANY UTILITIES INTERFERING WITH THE PROPOSED CONSTRUCTION AND APPROPRIATE REMEDIAL ACTION TAKEN BEFORE PROCEEDING WITH THE WORK. IT SHALL BE THE RESPONSIBILITY OF THE CONTRACTOR TO RELOCATE ALL EXISTING UTILITIES WHICH CONFLICT WITH THE PROPOSED IMPROVEMENTS SHOWN ON THE PLANS AT NO ADDITIONAL COST.
9. ALL PROPOSED MAIN BUILDING ENTRANCES AND WALKS SHALL BE HANDICAP ACCESSIBLE PER FEDERAL ADA & MA AAB REGULATIONS.
10. ALL SITE WORK DONE FOR THIS PROJECT SHALL BE IN STRICT ACCORDANCE WITH THE SITE PLANS AND SITE WORK SPECIFICATIONS FOR CONSTRUCTION.
11. ANY DAMAGE TO PRIVATE OR PUBLIC PROPERTIES DUE TO THE CONTRACTOR'S ACTIVITIES SHALL BE REPAIRED AND RESTORED BY THE CONTRACTOR AT THEIR OWN EXPENSE.
12. ALL PROPERTY MARKERS AND STREET LINE MONUMENTS SHALL BE PROPERLY PROTECTED DURING CONSTRUCTION. ANY DAMAGE TO THESE ITEMS SHALL BE REPAIRED AND RESTORED BY A SURVEYOR REGISTERED IN THE STATE OF MASSACHUSETTS AT THE CONTRACTOR'S EXPENSE.
13. ALL APPLICABLE PERMITS AND AN APPROVED SET OF PLANS SHALL BE AVAILABLE AT THE CONSTRUCTION SITE.
14. THE CONTRACTOR IS RESPONSIBLE FOR SCHEDULING A PRE-CONSTRUCTION MEETING THE WITH THE APPROPRIATE CITY DEPARTMENTS, THE APPROPRIATE UTILITY COMPANIES, THE OWNER AND OWNER'S REPRESENTATIVE. THE MEETING SHALL TAKE PLACE PRIOR TO THE START OF CONSTRUCTION AND THE CONTRACTOR MUST PROVIDE 48 HOURS NOTICE TO ALL ATTENDEES PRIOR TO THE START OF THE MEETING.
15. APPROPRIATE WARNING SIGNS, MARKERS, BARRICADES AND/OR FLAG MEN SHALL BE PROVIDED TO REGULATE TRAFFIC. CONSTRUCTION TRAFFIC CONTROLS SHALL BE IMPLEMENTED AND OPERATED ACCORDING TO THE MASS DEPARTMENT OF TRANSPORTATION, THE MANUAL ON UNIFORM TRAFFIC CONTROL DEVICES (MUTCD) AND THE LOCAL AUTHORITY.
16. THE CONTRACTOR IS RESPONSIBLE FOR OBTAINING ADDITIONAL BENCHMARK INFORMATION IF REQUIRED. THE CONTRACTOR IS RESPONSIBLE FOR LOCATING AND PROTECTING ALL EXISTING BENCHMARKS. IF IT IS NECESSARY TO RELOCATE A BENCHMARK, IT SHALL BE RELOCATED BY A MASSACHUSETTS PROFESSIONAL LAND SURVEYOR AND DONE SO AT THE CONTRACTOR'S EXPENSE.
17. ALL BUILDING DIMENSIONS ARE MEASURED TO THE OUTSIDE FACE OF THE BUILDING.
18. ALL RADII ARE 3 FEET UNLESS OTHERWISE NOTED.
19. ALL PARKING LOT AND AISLE DIMENSIONS ARE TAKEN FROM THE FACE OF CURB AND INDICATE EDGE OF PAVEMENT.
20. CONSTRUCTION DURING WET WEATHER OR WINTER CONDITIONS IS TO BE ANTICIPATED AND PROVISIONS TO ADEQUATELY ADDRESS THESE CONDITIONS SHALL BE THE RESPONSIBILITY OF THE CONTRACTOR AT NO ADDITIONAL COST.
21. THE CONTRACTOR IS RESPONSIBLE FOR OBTAINING AND PAYING FOR ANY PERMITS AND/OR CONNECTION FEES REQUIRED TO CARRY OUT THE WORK INCLUDING BUT NOT LIMITED TO DEMOLITION.
22. DISPOSAL OF ALL DEMOLISHED MATERIALS INCLUDING EXISTING MISC. CONSTRUCTION DEBRIS IS THE RESPONSIBILITY OF THE CONTRACTOR AND MUST BE DISPOSED OF OFF-SITE IN ACCORDANCE WITH ALL FEDERAL, STATE, AND LOCAL MUNICIPAL REQUIREMENTS AT NO ADDITIONAL COST.
23. ALL DISTURBED AREAS NOT NOTED TO RECEIVE OTHER TREATMENT ARE TO RECEIVE SIX INCHES (6") MINIMUM OF TOPSOIL & SEED, AND BE MAINTAINED UNTIL ESTABLISHED & ACCEPTED.
24. EXISTING STRUCTURES WITHIN CONSTRUCTION LIMITS ARE TO BE PROTECTED, ABANDONED, REMOVED OR RELOCATED AS NECESSARY.
25. CONTRACTOR SHALL BE RESPONSIBLE FOR ALL RELOCATIONS, INCLUDING BUT NOT LIMITED TO, ALL UTILITIES, STORM DRAINAGE, SIGNS, & POLES, ETC. AS REQUIRED. ALL WORK SHALL BE IN ACCORDANCE WITH THE LOCAL MUNICIPALITY'S GOVERNING AUTHORITY'S SPECIFICATIONS AND SHALL BE APPROVED BY SAME.
26. THE CONTRACTOR SHALL COORDINATE WITH ALL UTILITY COMPANIES TO DETERMINE EXACT POINT OF SERVICE CONNECTION AND DISCONNECTION AT EXISTING UTILITY.
27. ALL ELEVATIONS SHOWN ARE IN REFERENCE TO THE BENCHMARKS SHOWN ON THE EXISTING CONDITIONS SITE PLAN AND MUST BE VERIFIED BY THE GENERAL CONTRACTOR AT GROUNDBREAKING.
28. CONTRACTOR IS RESPONSIBLE FOR DIGGING TEST HOLES AND VERIFYING ANY EXISTING UTILITY OR STRUCTURE PRIOR TO CONSTRUCTION. CONTRACTOR SHALL VERIFY THAT BASED ON EXACT LOCATION OF EXISTING UTILITIES, THERE ARE NO CONFLICTS BETWEEN THE EXISTING AND THE PROPOSED UTILITIES/DRAINAGE STRUCTURES.
29. THE CONTRACTOR SHALL ADHERE TO ALL PERMIT CONDITIONS PROVIDED BY ALL GOVERNING AGENCIES AT NO ADDITIONAL COSTS. THIS INCLUDES BUT IS NOT LIMITED TO BUILDING PERMITS, DEMOLITION PERMITS, PLUMBING, GAS, AND ELECTRICAL PERMITS. PERMITS FROM THE PLANNING BOARD OR CITY COUNCIL.
30. DURING EXCAVATION, ANY EXISTING EARTH CUT MATERIALS THAT DO NOT MEET THE "ORDINARY FILL" SPECIFICATIONS OR "LOAM" SPECIFICATIONS AND CANNOT BE REUSED SHALL BE REMOVED OFFSITE BY THE CONTRACTOR AT NO ADDITIONAL COST TO THE OWNERS. MATERIAL WHICH DOES NOT MEET THE SPECIFICATION INCLUDES ALL BOULDERS, ROCKS, CONSTRUCTION DEBRIS, AND MISC. MATERIAL. PRIOR TO REUSE, CONTRACTOR TO PROVIDE TESTING REPORT OF SIEVE ANALYSIS TO ENGINEER FOR APPROVAL. CONTRACTOR CAN AMEND MATERIALS AND CONTINUE TO RETEST AS NECESSARY AT NO ADDITIONAL COST TO OWNER. AFTER AMENDING, IF MATERIAL STILL DOES NOT MEET THE SPECIFICATIONS, IT IS TO BE REMOVED FROM SITE AT NO ADDITIONAL COST TO THE OWNER AND IN ACCORDANCE WITH ALL FEDERAL, STATE, AND LOCAL LAWS AND REGULATIONS.
31. ANY PROPOSED SIGNAGE SHALL BE APPROVED BY SEPARATE APPLICATION TO THE APPROPRIATE MUNICIPAL AUTHORITY INCLUDING BUT NOT LIMITED TO THE ZONING BOARD OF APPEALS AND CITY COUNCIL. ALL PROPOSED SIGNAGE MUST MEET THE REQUIREMENTS OF THE LOCAL ZONING CODE.

GRADING & DRAINAGE NOTES:

1. EXISTING PAVEMENT SHALL BE SAW-CUT AND PAVEMENT JOINT SHALL BE INSTALLED WHERE NECESSARY TO ENSURE A SMOOTH CONTINUOUS GRADE.
2. ALL GRADING OPERATIONS SHALL BE COORDINATED WITH THE APPROPRIATE UTILITY COMPANIES.
3. IN LANDSCAPED AREAS THE TOP ELEVATION OF MANHOLES SHALL MATCH THE FINISH GRADE OF THE TOPSOIL. IN PAVED AREAS THE TOP ELEVATIONS OF MANHOLES SHALL MATCH FINISH GRADE.
4. ALL AREAS DISTURBED DURING CONSTRUCTION SHALL BE STABILIZED AS SOON AS POSSIBLE UPON COMPLETION OF CONSTRUCTION WORK IN THE AREA.
5. TEMPORARY TUBULAR BARRIER PROTECTION AND/OR SILT SACKS SHALL BE INSTALLED AND MAINTAINED AT EXISTING DRAINAGE STRUCTURES DURING CONSTRUCTION, TO PREVENT SEDIMENT LADEN RUNOFF FROM ENTERING THE DRAINAGE SYSTEM.
6. CONTRACTOR IS RESPONSIBLE FOR DEMOLITION OF EXISTING STRUCTURES INCLUDING REMOVAL OF ANY EXISTING UTILITIES SERVING THE STRUCTURE PER DEMOLITION PLAN.
7. ALL CATCH BASINS, MANHOLES, INFILTRATION SYSTEMS, AND WATER QUALITY STRUCTURES ARE TO BE CLEANED TO REMOVE ALL CONSTRUCTION SILT AND DEBRIS PRIOR TO FINAL APPROVAL.
8. IF ANY EXISTING UTILITY STRUCTURES TO REMAIN ARE DAMAGED DURING CONSTRUCTION, IT SHALL BE THE CONTRACTOR'S RESPONSIBILITY TO REPAIR AND/OR REPLACE THE EXISTING STRUCTURE AS NECESSARY TO RETURN IT TO EXISTING CONDITIONS OR BETTER AT NO ADDITIONAL COST.
9. ALL STORM PIPES ENTERING STRUCTURES SHALL BE GROUTED TO ENSURE CONNECTION AT STRUCTURE IS WATERTIGHT.
10. ALL STORM DRAIN MANHOLES SHALL HAVE TRAFFIC BEARING RING & COVERS & SHALL BE LABELED "DRAIN".
11. THE CONTRACTOR SHALL ADHERE TO ALL TERMS & CONDITIONS AS OUTLINED IN THE GENERAL N.P.D.E.S. PERMIT FOR STORM WATER DISCHARGE ASSOCIATED WITH CONSTRUCTION ACTIVITIES.
12. CONTRACTOR SHALL ENSURE POSITIVE DRAINAGE AWAY FROM BUILDINGS FOR ALL NATURAL AND PAVED AREAS.
13. CONTRACTOR SHALL APPLY STABILIZATION FABRIC TO ALL SLOPES STEEPER THAN 3H:1V.
14. ALL DRAINAGE SYSTEM COMPONENTS SHALL CONFORM TO LOCAL REQUIREMENTS.

UTILITY NOTES:

1. THE LATEST STANDARDS OF THE LOCAL MUNICIPALITY SHALL BE FOLLOWED WHEN INSTALLING ANY STORM DRAIN WORK. STORM DRAIN WORK WILL BE INSPECTED BY THE LOCAL GOVERNING AUTHORITY PERSONNEL AND ALL COSTS SHALL BE THE RESPONSIBILITY OF THE CONTRACTOR.
2. WHERE AN EXISTING UTILITY IS FOUND TO CONFLICT WITH THE PROPOSED WORK, THE LOCATION, ELEVATION AND SIZE OF THE UTILITY SHALL BE ACCURATELY DETERMINED WITHOUT DELAY BY THE CONTRACTOR, AND THE INFORMATION FURNISHED TO THE ENGINEER FOR RESOLUTION.
3. ABANDONED EXISTING UTILITIES AND UTILITIES TO BE ABANDONED SHALL EITHER BE ABANDONED IN PLACE AS NOTED OR SHALL BE REMOVED AND DISPOSED OF AS SPECIFIED. ALL UTILITIES SCHEDULED FOR ABANDONMENT OR REMOVAL AND DISPOSAL MUST BE COORDINATED BY THE CONTRACTOR WITH THE RESPECTIVE UTILITY OWNER. WHEN ABANDONED UTILITIES ARE TO BE LEFT IN PLACE, PLUG OR CAP THE ENDS OF THE CONDUITS AND PIPES. REMOVE ABANDONED UTILITY MANHOLES, JUNCTION BOXES AND SIMILAR STRUCTURES TO A MINIMUM DEPTH OF 4 FEET BELOW FINISHED GRADE AND PUNCTURE OR BREAK THE BOTTOM SLABS OF MANHOLES AND SIMILAR STRUCTURE TO ALLOW DRAINAGE. BACKFILL AND COMPACT EXCAVATIONS RESULTING FROM REMOVAL OF UTILITY FACILITATES, AS REQUIRED TO RESTORE THE ORIGINAL GRADE.
4. THE CONTRACTOR SHALL MAKE ARRANGEMENTS FOR THE ALTERATION AND ADJUSTMENTS OF NATURAL GAS, ELECTRIC, TELEPHONE AND ANY OTHER UTILITY BY THE UTILITY OWNER.
5. THE CONTRACTOR SHALL USE THE FOLLOWING PIPE MATERIALS:
   - DRAIN – HDPE (HIGH DENSITY CORRUGATED POLYETHYLENE PIPE WITH SMOOTH INNER WALL), ASTM D2321 (UNLESS OTHERWISE SPECIFIED ON PLAN)
8. BEFORE UTILITY WORK BEGINS, THE CONTRACTOR WILL COORDINATE WITH THE LOCAL MUNICIPALITY FOR THE APPROPRIATE PERMIT AND INSPECTION FEES.
9. A MINIMUM OF 10 FEET CLEAR HORIZONTALLY SHALL BE MAINTAINED BETWEEN WATER MAINS AND SANITARY SEWER MAINS AND/OR STORM DRAINS. WHENEVER CONDITIONS PREVENT A LATERAL SEPARATION OF 10 FEET TO A WATER MAIN, THE WATER MAIN SHALL BE LAID IN A SEPARATE TRENCH AND THE DIFFERENCE IN ELEVATION BETWEEN THE WATER MAIN AND THE SEWER MAIN SHALL BE AT LEAST 18 INCHES.
10. ALL FILL MATERIAL IS TO BE IN PLACE, AND COMPACTED BEFORE INSTALLATION OF PROPOSED UTILITIES.
11. CONTRACTOR SHALL NOTIFY THE UTILITY AUTHORITY'S INSPECTORS 72 HOURS BEFORE CONNECTING TO ANY EXISTING LINE.
12. MINIMUM TRENCH WIDTH SHALL BE 2 FEET.
13. CONTRACTOR SHALL MAINTAIN A MINIMUM OF 5'-0" COVER AND A MAXIMUM OF 8'-0" COVER ON ALL WATERLINES.
14. IN THE EVENT OF A VERTICAL CONFLICT BETWEEN WATERLINES, SANITARY LINES, STORM LINES AND GAS LINES (EXISTING AND PROPOSED), THE SANITARY LINE SHALL BE DUCTILE IRON PIPE WITH MECHANICAL JOINTS AT LEAST 10 FEET ON BOTH SIDES OF CROSSING, THE WATERLINE SHALL HAVE MECHANICAL JOINTS WITH APPROPRIATE THRUST BLOCKING AS REQUIRED TO PROVIDE A MINIMUM OF 18" CLEARANCE BETWEEN THE PIPES. WHERE THE WATERLINE IS LESS THAN THE 18" VERTICAL CLEARANCE AND MEETING 10' HORIZONTAL CLEARANCE CANNOT BE MET, THE WATER MUST BE ENCASED IN CONCRETE.
15. ALL CONCRETE FOR ENCASEMENTS SHALL HAVE A MINIMUM 28 DAY COMPRESSION STRENGTH OF 3000 P.S.I.
16. CONTRACTOR IS RESPONSIBLE FOR COMPLYING WITH THE SPECIFICATIONS OF THE LOCAL AUTHORITIES WITH REGARDS TO MATERIALS AND INSTALLATION OF THE WATER, SEWER, GAS AND ELECTRICAL AND TELECOMMUNICATIONS LINES.
17. ALL NECESSARY INSPECTIONS AND/OR CERTIFICATIONS REQUIRED BY CODES AND/OR UTILITY SERVICE COMPANIES SHALL BE PERFORMED PRIOR TO ANNOUNCED BUILDING POSSESSION AND THE FINAL CONNECTION OF SERVICE.
18. DRAWINGS DO NOT NECESSARILY SHOW ALL EXISTING UTILITIES.

ABBREVIATIONS

ABAN	ABANDON	L	LENGTH
ADJ	ADJUST	LB	LEACHING BASIN
		LP	LIGHT POLE
B	BORING		
BC	BOTTOM OF CURB	MAT	MATERIAL
BIT	BITUMINOUS	MAX	MAXIMUM
BCB	BITUMINOUS CONCRETE BERM	MH	MANHOLE
BLDG	BUILDING	MIN	MINIMUM
BM	BENCH MARK	MISC	MISCELLANEOUS
BOS	BOTTOM OF SLOPE	MTD	MOUNTED
BOW	BOTTOM OF WALL	MW	MONITORING WELL
BRK	BRICK		
BV&B	BUTTERFLY VALVE & BOX	N	NORTH
BVW	BORDERING VEGETATED WETLAND	NIC	NOT IN CONTRACT
		NO	NUMBER
CATV	CABLE TELEVISION	NTS	NOT TO SCALE
CB	CATCH BASIN	OC	ON CENTER
CF	CUBIC FEET	OD	OUTSIDE DIAMETER
CFS	CUBIC FEET PER SECOND	OHW	OVERHEAD WIRE
CI	CAST IRON (PIPE)	OVHD	OVERHEAD
CL	CENTERLINE	OW	OBSERVATION WELL
CLDI	CEMENT LINED DUCTILE IRON (PIPE)		
CM	CONSTRUCTION MANAGER	PC	POINT OF CURVATURE
CMP	CORRUGATED METAL PIPE	PCC	PRECAST CONCRETE CURB
CO	CLEAN OUT	PI	POINT OF INTERSECTION
CONC	CONCRETE	PKG	PARKING
CONST	CONSTRUCTION	PL	PROPERTY LINE
CONT	CONTRACTOR	PLMB	PLUMBING
CRD	COORDINATE	POC	POINT ON CURVATURE
CPP	CORRUGATED POLYETHYLENE PIPE	POT	POINT ON TANGENT
CUL	CULVERT	PRC	POINT OF REVERSE CURVATURE
CY	CUBIC YARD	PROP, P	PROPOSED
		PT	POINT (OR POINT OF TANGENT)
DB	DISTRIBUTION BOX	PVC	POLYVINYL CHLORIDE (PIPE)
DBL	DOUBLE		
DEM	DEMOLISH	R&R	REMOVE & RESET/REPLACE
DET	DETENTION	R&S	REMOVE & STACK
DI	DUCTILE IRON (PIPE)	RCP	REINFORCED CONCRETE PIPE
DIA	DIAMETER	RD	ROAD (OR ROOF DRAIN)
DIM	DIMENSION	RED	REDUCER
DMH	DRAIN MANHOLE	RELOC	RELOCATE
DW	DOMESTIC WATER (OR DRY WELL)	REM	REMOVE
DWG	DRAWING	RET	RETAIN, RETAINING OR RETENTION
DYCL	DOUBLE YELLOW CENTERLINE	ROW	RIGHT OF WAY
		RR	RAILROAD
EHH	ELECTRIC HANDHOLE	RWL	RAIN WATER LEADER
EL	ELEVATION	RWY	ROADWAY
ELEC	ELECTRIC		
EMH	ELECTRIC MANHOLE	SD	SUBDRAIN
EOP	EDGE OF PAVEMENT	SF	SQUARE FEET
EOR	EDGE OF ROAD	SGC	SLOPED GRANITE CURB
EOW	EDGE OF WETLANDS	SMH	SEWER MANHOLE
ETC	ELECTRIC, TELEPHONE, CABLE	SP	STANDPIPE
EXIST	EXISTING	SPEC	SPECIFICATION
EXT	EXTERIOR	STA	STATION
		STC	STORMCEPTOR
FA	FIRE ALARM	STD	STANDARD
FCC	FLUSH CONCRETE CURB	STRTL	STRUCTURAL
FES	FLARED END SECTION	SWEL	SOLID WHITE EDGE LINE
FFE	FINISH FLOOR ELEVATION	SW	SIDEWALK
FLNP	FIRE LANE NO PARKING	SWLL	SOLID WHITE LANE LINE
FPS	FEET PER SECOND	SYCL	SOLID YELLOW CENTERLINE
FS	FIRE SERVICE		
FT	FOOT/FEET	TB	TEST BORING
		TC	TOP OF CURB
GC	GENERAL CONTRACTOR	TD	TRENCH DRAIN
GEN	GENERAL	TEL, T	TELEPHONE
GG	GAS GATE	TMH	TELEPHONE MANHOLE
GR	GUIDE RAIL	TOS	TOP OF SLOPE
GRAN	GRANITE	TOW	TOP OF WALL
GV	GATE VALVE	TP	TEST PIT
GV&B	GATE VALVE & BOX	TS&V	TAPPING SLEEVE & VALVE
GW	GROUND WATER	TYP	TYPICAL
		UD	UNDERDRAIN
HCR	HANDICAP RAMP	UL	UNDERWRITERS LABORATORY
HOR	HORIZONTAL	UP	UTILITY POLE
HT	HEIGHT		
HW	HEADWALL	VCP	VITRIFIED CLAY PIPE
HWY	HIGHWAY	VERT	VERTICAL
HYD	HYDRANT	VGC	VERTICAL GRANITE CURB
ID	INSIDE DIAMETER	WD	WOOD
IN	INCHES	WG	WATER GATE
INCL	INCLUDE	WM	WATER MAIN
INST	INSTALLED	WMH	WATER MANHOLE
INV, I.E.	INVERT, INVERT ELEVATION	WSO	WATER SHUTOFF

N:\PROJECTS\3048-01\CIVIL\DRAWINGS\CURRENT\C-3048-01_ABBREVIATIONS & NOTES.DWG

APPROVED BY:
TOWN OF LEXINGTON PLANNING BOARD

_____
_____
_____
_____
_____
DATE: _____

THIS PLAN IS SUBJECT TO A COVENANT
DATED _____
THIS PLAN IS SUBJECT TO A CERTIFICATE OF
ACTION DATED _____
THIS PLAN IS SUBJECT TO A SPECIAL PERMIT
DATED _____

I _____ TOWN CLERK OF THE TOWN OF LEXINGTON, MASSACHUSETTS HEREBY CERTIFY THAT THE NOTICE OF APPROVAL OF THIS PLAN HAS BEEN RECEIVED AND RECORDED AT THIS OFFICE AND NO NOTICE OF APPEAL WAS RECEIVED DURING THE TWENTY DAYS NEXT AFTER SUCH RECEIPT AND RECORDING OF SAID NOTICE.

_____ _____
TOWN CLERK DATE

COMMONWEALTH OF MASSACHUSETTS
CARLTON M. QUINN
CIVIL
No.49923
REGISTERED PROFESSIONAL ENGINEER
5.19.22

PROFESSIONAL ENGINEER FOR
ALLEN & MAJOR ASSOCIATES, INC.

REV	DATE	DESCRIPTION

APPLICANT\OWNER:
131 HARTWELL LLC.
131 HARTWELL AVENUE
LEXINGTON, MA 02421

PROJECT:
DEFINITIVE NON-RESIDENTIAL SUBDIVISION
131 HARTWELL AVENUE
LEXINGTON, MA

PROJECT NO.	3048-01	DATE:	05-19-2022
SCALE:	NONE	DWG. NAME:	C-3048-01
DESIGNED BY:	SJL/CMQ	CHECKED BY:	CMQ

PREPARED BY:
ALLEN & MAJOR ASSOCIATES, INC.
civil engineering ◆ land surveying
environmental consulting ◆ landscape architecture
www.allenmajor.com
100 COMMERCE WAY, SUITE 5
WOBURN MA 01801-8501
TEL: (781) 935-6889
FAX: (781) 935-2896
WOBURN, MA ◆ LAKEVILLE, MA ◆ MANCHESTER, NH

THIS DRAWING HAS BEEN PREPARED IN DIGITAL FORMAT. CLIENT/CLIENT'S REPRESENTATIVE OR CONSULTANTS MAY BE PROVIDED COPIES OF DRAWINGS AND SPECIFICATIONS FOR HIS/HER INFORMATION AND/OR SPECIFIC USE ON THIS PROJECT. DUE TO THE POTENTIAL THAT THE PROVIDED INFORMATION MAY BE MODIFIED UNINTENTIONALLY OR OTHERWISE, ALLEN & MAJOR ASSOCIATES, INC. MAY REMOVE ALL INDICATION OF THE DOCUMENT'S AUTHORSHIP ON THE DIGITAL MEDIA. PRINTED REPRESENTATIONS OR PORTABLE DOCUMENT FORMAT OF THE DRAWINGS AND SPECIFICATIONS ISSUED SHALL BE THE ONLY RECORD COPIES OF ALLEN & MAJOR ASSOCIATES, INC.'S WORK PRODUCT.

DRAWING TITLE:	SHEET No.
ABBREVIATIONS & NOTES	C-001

Copyright©2021 Allen & Major Associates, Inc.
All Rights Reserved

EROSION CONTROL NOTES

EROSION & SEDIMENTATION CONTROL NOTES:

1. EROSION CONTROL SHALL BE INSTALLED PRIOR TO CONSTRUCTION AND SHALL BE ADEQUATE TO MAINTAIN SEDIMENT ON SITE. ANY MODIFICATIONS TO SILT CONTROLS SHOWN ON THE APPROVED PLANS AS A RESULT OF ACTUAL FIELD CONDITIONS OR CONSTRUCTION PRACTICES SHALL BE INSTALLED IN ACCORDANCE WITH B.M.P. (BEST MANAGEMENT PRACTICES) PER THE E.P.A. 2017 "CONSTRUCTION GENERAL PERMIT" MANUAL, AND MASSACHUSETTS 2003 EROSION & SEDIMENT CONTROL GUIDELINES FOR URBAN AND SUBURBAN AREAS, ANY SUCH MODIFICATIONS FROM THE ABOVE MANUALS SHALL BE INSTALLED AS APPROVED BY THE ENGINEER OR THE LOCAL MUNICIPALITY.

2. AREAS OF EXPOSED SOIL UNDERGOING CONSTRUCTION THAT WILL NOT BE COVERED AND OR FINISHED GRADED SHALL BE STABILIZED AS SOON AS PRACTICABLE BUT IN NO CASE MORE THAN 14 DAYS AFTER THE CONSTRUCTION ACTIVITY (UNLESS MUNICIPALITY HAS STRICTER REQUIREMENTS WHICH SHALL BE FOLLOWED) IN THAT PORTION OF THE SITE HAS TEMPORARILY OR PERMANENTLY CEASED. TEMPORARY EROSION CONTROL MEASURES SHALL INCLUDE EROSION CONTROL MESH, NETTING OR MULCH AS DIRECTED BY THE OWNER'S REPRESENTATIVE AND SHOWN ON THE DESIGN PLANS. IF MULCH IS USED, STRAW MULCH SHALL BE APPLIED AT THE RATE OF 4 BALES PER 1,000 SQUARE FEET. APPLICATION AREA SHALL BE SUFFICIENTLY COVERED WITH MULCH TO AVOID ANY VISIBLE SOIL EXPOSURE. MULCH SHALL BE KEPT MOIST TO AVOID LOSS DUE TO WIND. MULCH AND NETTING SHALL BE APPLIED IN THE BASE OF ALL GRASSED WATERWAYS, IN VEGETATIVE SLOPES WHICH EXCEED 15% AND DISTURBED AREAS WITHIN 100 FEET OF WETLANDS OR STREAMS.

3. IF DISTURBED AREAS DO NOT RECEIVE FINAL SEEDING BY OCTOBER 1ST OF THE CONSTRUCTION YEAR, THEN ALL DISTURBED AREAS SHALL BE SEEDED WITH A WINTER COVER CROP AT THE RATE OF 3 LBS PER 1,000 SQUARE FEET. WINTER SEEDING SHALL BE COVERED WITH EROSION CONTROL MESH (MULCH AND NETTING). HEAVY GRADE MATS SHALL BE USED IN THE BASE OF ALL GRASSED WATERWAYS ON VEGETATED SLOPES IN EXCESS OF 15%, AND ANY DISTURBED AREAS WITHIN 100 FEET OF WETLANDS OR STREAMS. MULCH AND NETTING SHALL ALSO BE PROVIDED FOR ADDITIONAL WINTER PROTECTION.

4. ALL TOPSOIL SHALL BE COLLECTED, STOCKPILED, SEEDED WITH RYE AT 3LBS PER 1,000 SQUARE FOOT AND MULCHED, AND REUSED AS REQUIRED. TUBULAR BARRIERS SHALL BE PLACED DOWN GRADIENT FROM STOCKPILED LOAM. LOAM SHALL BE STOCKPILED AT LOCATIONS DESIGNATED BY THE OWNER AND ENGINEER.

5. ALL TUBULAR BARRIERS, SILT SACKS, AND EROSION CONTROL BERMS SHALL BE INSTALLED ACCORDING TO THE SITE PREPARATION PLAN. THESE SHALL BE MAINTAINED DURING DEVELOPMENT TO REMOVE SEDIMENT FROM RUNOFF WATER. ALL THE FILTER BARRIERS AND EROSION CONTROL BERMS SHALL BE INSPECTED AFTER ANY RAINFALL OR RUNOFF EVENT, MAINTAINED AND CLEANED UNTIL ALL AREAS HAVE AT LEAST 85-90% VIGOROUS PERENNIAL COVER OF GRASSES.

6. ADJACENT ROADS SHALL BE PERIODICALLY SWEPT OR WASHED TO AVOID TRACKING MUD, DUST OR DEBRIS FROM THE CONSTRUCTION AREA AS OFTEN AS NECESSARY (WHICH COULD BE ON A DAILY BASIS) TO REMOVE ANY SOIL OR SEDIMENTS AT NO ADDITIONAL COST TO THE OWNER. A WATERING TRUCK WILL BE USED TO PERIODICALLY SPRINKLE CONSTRUCTION AREAS IN ORDER TO KEEP THE LEVEL OF DUST TO A MINIMUM DURING THE DRY MONTHS AT NO ADDITIONAL COST TO THE OWNER.

7. THE CONTRACTOR SHALL USE EXTREME CAUTION TO AVOID ALLOWING SEDIMENTS TO ENTER THE STORM DRAIN SYSTEM DURING CONSTRUCTION. BOTH EXISTING AND PROPOSED CATCH BASIN INLETS SHALL BE PROTECTED DURING CONSTRUCTION BY THE USE SILT SACKS AND/OR TUBULAR BARRIERS AROUND EACH INLET AS NOTED ON THE PLANS. INLET PROTECTION MAY BE REMOVED ONLY AFTER FINISHED AREAS ARE PAVED AND THE VEGETATED SLOPES ARE ESTABLISHED WITH AT LEAST 85-90% OF VIGOROUS PERENNIAL GROWTH.

8. AS APPLICABLE, EROSION CONTROL MESH SHALL BE APPLIED IN ACCORDANCE WITH THE PLANS OVER ALL FINISHED SEEDED AREAS AS SPECIFIED ON THE DESIGN PLANS.

9. AT A MINIMUM, ALL TUBULAR BARRIERS AND FILTER FABRIC SHALL REMAIN IN PLACE UNTIL SEEDINGS OR PLANTINGS HAVE BECOME 85-90% ESTABLISHED. THE LOCAL CONSERVATION COMMISSION MUST APPROVE THE REMOVAL OR RELOCATION OF ANY OF THE TUBULAR BARRIERS AND FILTER FABRIC. ONCE THE TUBULAR BARRIERS ARE REMOVED THE AREAS ARE TO BE LOAMED AND SEEDED TO ACHIEVE FULL STABILIZATION.

10. AT THE OWNER'S DISCRETION ADDITIONAL EROSION CONTROL MEASURES MAY BE REQUIRED TO MAINTAIN STABILITY OF EARTHWORKS AND FINISHED GRADED AREAS. THE CONTRACTOR, AT HIS EXPENSE, WILL BE RESPONSIBLE FOR PROVIDING AND INSTALLING ANY ADDITIONAL MEASURES AS SPECIFIED BY THE OWNER. THIS INCLUDES BUT IS NOT LIMITED TO REQUESTS BY MA DEP, THE ENGINEER AND THE LOCAL MUNICIPALITY, AS AUTHORIZED BY THE OWNER. FAILURE TO COMPLY WITH THE OWNER'S DIRECTIONS WILL RESULT IN DISCONTINUATION OF CONSTRUCTION ACTIVITIES.

11. INSPECTIONS AND MONITORING MAINTENANCE MEASURES SHALL BE APPLIED AS NEEDED DURING THE ENTIRE CONSTRUCTION CYCLE. WEEKLY INSPECTIONS SHALL BE HELD THROUGH THE DURATION OF CONSTRUCTION ACTIVITY. WEEKLY INSPECTION REPORTS SHALL BE MAINTAINED BY THE CONTRACTOR AND LOCATED IN THE CONTRACTORS FIELD OFFICE ONSITE. IN ADDITION TO THE NORMAL WEEKLY INSPECTIONS, THE CONTRACTOR SHALL PERFORM AN INSPECTION OF ALL EROSION CONTROL MEASURES AFTER EACH RAINFALL OR RUNOFF EVENT, AND PERFORM THE NECESSARY REPAIRS. THE INSPECTIONS SHALL INCLUDE BUT NOT BE LIMITED TO THE SITE'S DOWN STREAM DISCHARGE POINTS.

12. IF ANY EVIDENCE OF SEDIMENTATION IS OBSERVED AT THE STORMWATER MANAGEMENT AREA INLETS, THE CONTRACTOR SHALL, AT HIS OWN EXPENSE, PROVIDE A PLAN TO THE ENGINEER TO REMOVE ANY ACCUMULATED SEDIMENT IN THESE AREAS. THE CONTRACTOR SHALL ALSO IMMEDIATELY PROVIDE ADDITIONAL ON SITE EROSION AND SEDIMENTATION CONTROL MEASURES TO PREVENT FURTHER DEGRADATION OF THE AREA.

13. FOLLOWING THE TEMPORARY OR FINAL SEEDINGS, THE CONTRACTOR SHALL INSPECT THE WORK AREA SEMI-MONTHLY TO ENSURE THE AREAS HAVE A MINIMUM OF 85-90% VEGETATED VIGOROUS GROWTH. RE-SEEDING SHALL BE CARRIED OUT BY THE CONTRACTOR WITH FOLLOW UP INSPECTIONS IN THE EVENT OF ANY FAILURES UNTIL VEGETATION IS ADEQUATELY ESTABLISHED.

14. CONTRACTOR & ALL SITE SUBCONTRACTORS SHALL BE FAMILIAR WITH & FOLLOW ALL APPROVED PERMITS AND CONDITIONS. CONTRACTOR SHALL MAINTAIN A COPY OF ALL APPROVED PERMITS ONSITE. ALL CONDITIONS & RECOMMENDATIONS WITHIN THE APPROVED PERMITS SHALL BE COMPLETED.

15. ALL EROSION MEASURES SHALL BE INSTALLED PRIOR TO CONSTRUCTION AND SHALL BE ADEQUATE TO MAINTAIN SEDIMENT ON SITE. ANY MODIFICATIONS SHALL BE INSTALLED AS DIRECTED BY THE ENGINEER OR THE LOCAL MUNICIPALITY.

16. EROSION AND SEDIMENTATION CONTROL MEASURES SHALL BE MAINTAINED DURING CONSTRUCTION, AND SHALL REMAIN IN PLACE UNTIL ALL SITE WORK IS COMPLETE AND GROUND COVER IS ESTABLISHED.

17. TOP OF STOCKPILES SHALL BE COVERED IN SUCH MANNER THAT STORMWATER DOES NOT INFILTRATE THE MATERIALS AND THEREBY RENDER THE SAME UNSUITABLE FOR FILL USE.

EROSION & SEDIMENTATION CONTROL NOTES (CONTINUED):

18. ALL DISTURBED OR EXPOSED AREAS SUBJECT TO EROSION SHALL BE STABILIZED WITH MULCH OR SEEDED FOR TEMPORARY VEGETATIVE COVER. NO AREA, SUBJECT TO EROSION SHALL BE LEFT DISTURBED AND UNSTABILIZED FOR PERIODS LONGER THAN IS ABSOLUTELY NECESSARY TO CARRY OUT THAT PORTION OF THE CONSTRUCTION WORK OR SIX MONTHS AFTER SOIL HAS BEEN DISTURBED WHICHEVER IS LESS.

19. CULVERT/PIPE INLETS AND OUTFALLS SHALL BE PROTECTED BY TUBULAR BARRIER FILTERS AND STONE CHECK DAMS UNTIL DISTURBED AREAS ARE PERMANENTLY STABILIZED.

20. TUBULAR BARRIER DIKES SHALL BE CONSTRUCTED AT ALL EXISTING & PROPOSED CATCH BASINS. NO SEDIMENTATION SHALL ENTER THE ON-SITE OR OFF-SITE DRAINAGE SYSTEMS AT ANY TIME.

21. ALL EROSION CONTROL MEASURES SHALL BE ROUTINELY INSPECTED, CLEANED AND REPAIRED OR REPLACED AS NECESSARY THROUGHOUT ALL PHASES OF CONSTRUCTION. IN ADDITION, INSPECTIONS SHALL TAKE PLACE WEEKLY AND BEFORE AND AFTER EACH RAINFALL EVENT.

22. ALL PROPOSED SLOPES STEEPER THAN 3:1 SHALL BE STABILIZED WITH JUTE MESH AND PROTECTED FROM EROSION UNTIL WORK IS COMPLETE AND GROUND COVER IS ESTABLISHED.

23. THE CONTRACTOR SHALL KEEP ON SITE AT ALL TIMES ADDITIONAL TUBULAR BARRIERS FOR INSTALLATION AT THE DIRECTION OF THE ENGINEER OR THE TOWN ENGINEER TO MITIGATE ANY EMERGENCY CONDITION.

24. AS CONSTRUCTION DISTURBANCE IS LESS THAN 1 ACRE, A NATIONAL POLLUTANT DISCHARGE ELIMINATION SYSTEM (NPDES) CONSTRUCTION GENERAL PERMIT NOI, AND STORM WATER POLLUTION PREVENTION PLAN (SWPPP) WILL NOT NEED TO BE SUBMITTED TO THE EPA.

25. OWNER AND CONTRACTOR ARE RESPONSIBLE FOR COMPLIANCE WITH THE CONSTRUCTION GENERAL PERMIT NOI. WEEKLY SWPPP INSPECTION REPORTS TO BE PERFORMED BY CONTRACTOR. COPIES OF ALL SWPPP INSPECTION REPORTS SHALL BE PROVIDED TO THE LOCAL MUNICIPALITY, EPA, DEP, OR ANY OTHER AUTHORITY REQUESTING WITHIN 3 DAYS OF EACH INSPECTION.

26. APPLICABLE WORK AND MATERIALS SHALL COMPLY WITH ALL LOCAL, MA DEP, EPA CONSTRUCTION GENERAL PERMIT STANDARDS. ALL CONSTRUCTION SHALL CONFORM TO THE APPLICABLE SITE PLAN REGULATIONS FROM THE LOCAL AND USDA SOIL CONSERVATION SERVICE VEGETATIVE PRACTICES IN SITE DEVELOPMENT.

27. A WATERING TRUCK SHALL BE USED TO PERIODICALLY SPRINKLE CONSTRUCTION AREAS IN ORDER TO KEEP THE LEVEL OF DUST TO A MINIMUM DURING THE DRY MONTHS AND AS REQUIRED.

28. IF DEWATERING IS NECESSARY IT SHALL ONLY BE COMPLETED AS FOLLOWS: THE DISCHARGE SHALL BE STOPPED IMMEDIATELY IF THE RECEIVING AREA SHOWS ANY SIGN OF INSTABILITY OR EROSION. ALL CHANNELS, SWALES, AND DITCHES DUG FOR DISCHARGING WATER FROM THE EXCAVATED AREA SHALL BE STABLE PRIOR TO DIRECTING DISCHARGE TO THEM. IF A CONSTRUCTION EQUIPMENT BUCKET IS USED, IT SHALL EMPTY THE MATERIAL TO A STABLE AREA. NO DEWATERING SHALL OCCUR DURING PERIODS OF INTENSE, HEAVY RAIN. FLOW TO THE SEDIMENT REMOVAL STRUCTURE SHALL NOT EXCEED THE STRUCTURE'S CAPACITY TO SETTLE AND FILTER FLOW OR ITS VOLUME CAPACITY. WHENEVER POSSIBLE, THE DISCHARGE FROM THE SEDIMENT REMOVAL STRUCTURE SHALL DRAIN TO A WELL-VEGETATED BUFFER BY SHEET FLOW WHILE MAXIMIZING THE DISTANCE TO THE NEAREST WATER RESOURCE AND MINIMIZING THE SLOPE OF THE BUFFER AREA. THERE SHALL BE NO DIRECT DISCHARGE TO EXISTING WETLANDS OR STREAMS. ALL DISCHARGE SHALL BE IN COMPLIANCE WITH STATE, LOCAL, AND FEDERAL REQUIREMENTS.

29. INITIATE STABILIZATION OF EXPOSED AREAS IMMEDIATELY IF CONSTRUCTION WORK TEMPORARILY OR PERMANENTLY CEASES.

30. ALL DISCHARGES FROM POLLUTION SOURCES ARE PROHIBITED ONSITE SUCH AS FUELS, WASTEWATER FROM WASH OUT OF CONCRETE, WASTEWATER FROM CLEAN OUT OF PAINTS, FORM RELEASE OILS, SOLVENTS, ADHESIVES, CURING COMPOUNDS, POLLUTANTS USED FOR MAINTENANCE OF VEHICLES AND EQUIPMENT, SOAPS & SOLVENTS, TOXIC OR HAZARDOUS SUBSTANCES, CHEMICALS AND OILS. IF A POLLUTANT IS DISCHARGED IT NEEDS TO BE IMMEDIATELY CLEANED UP BY REMOVING THE CHEMICAL AND AFFECTED SOIL OR AREA OF SPILL FROM THE SITE IN ACCORDANCE WITH BOTH THE MANUFACTURER RECOMMENDATIONS, FEDERAL, STATE, AND LOCAL REQUIREMENTS. DO NOT HOSE DOWN AND SPREAD SPILLED ITEM. ALL CHEMICALS USED ON THE SITE SHALL BE IN LEAK-PROOF CONTAINERS STORED AWAY FROM WETLANDS, SURFACE WATERS, STORMWATER INLETS, AND DRAINAGE MEASURES. SPILL KITS SHALL BE AVAILABLE ONSITE FOR EMERGENCY USE. THERE SHALL BE A SECONDARY CONTAINMENT MEASURE OF ALL CHEMICALS IN ADDITION TO SPILL-PROOF CONTAINERS.

31. PRIOR TO COMMENCEMENT OF CONSTRUCTION, APPLICABLE CONTRACTOR PERSONNEL MUST HAVE AN UNDERSTANDING OF THE EPA CONSTRUCTION GENERAL PERMIT REQUIREMENTS AND THEIR SPECIFIC RESPONSIBILITIES UNDER THE PERMIT. AT A MINIMUM, PERSONNEL MUST BE TRAINED AND UNDERSTAND THE FOLLOWING: LOCATION OF ALL STORMWATER CONTROLS AND HOW TO MAINTAIN THEM, PROCEDURES FOR COMPLYING WITH THE POLLUTION PREVENTION REQUIREMENTS. PROCEDURES FOR CONDUCTING INSPECTIONS, RECORDING FINDINGS, AND TAKING CORRECTIVE ACTION.

32. ALL SEDIMENT TRACKED ONTO ROADWAYS MUST BE REMOVED AT END OF EACH WORK DAY.

33. ALL USE OF CATIONIC TREATMENT CHEMICALS (EXAMPLES INCLUDE POLYMERS, CHITOSAN, CATIONIC PAM, FLOCCULANTS OR OTHER CHEMICAL UTILIZED FOR STABILIZATION) ARE PROHIBITED. IF ALL OTHER AVAILABLE STABILIZATION MEASURES ARE NOT POSSIBLE AND USE OF CATIONIC CHEMICALS IS ABSOLUTELY NECESSARY THE CONTRACTOR WILL NEED TO CONTACT THE EPA NEW ENGLAND OFFICE IN WRITING FOR APPROVAL AND SPECIFIC REQUIREMENTS (MAXIMUM DOSAGE RATE, RESIDUAL TESTING, SPECIFIC LIMITATIONS, ETC) PRIOR TO USE.

34. IF USING NON-VEGETATIVE STABILIZATION MEASURES, IT MUST BE COMPLETED NO LATER THAN 14 DAYS AFTER INITIATING STABILIZATION. ALL AREAS OF EXPOSED SOILS MUST BE COVERED.

35. INSPECTIONS OF EROSION CONTROL MEASURES SHALL BE AT LEAST ONCE EVERY 7 DAYS BY THE CONTRACTOR. AT A MINIMUM INSPECTIONS SHALL INCLUDE ALL DISTURBED AREAS, ALL STORMWATER CONTROLS AND POLLUTION PREVENTION MEASURES, ALL LOCATIONS WHERE STABILIZATION MEASURES HAVE BEEN IMPLEMENTED, EQUIPMENT AND MATERIAL STORAGE AREAS, ALL AREAS WHERE STORMWATER FLOWS AND ALL POINTS OF DISCHARGE. WHEN CORRECTIVE ACTIONS ARE REQUIRED, THE CONTRACTOR MUST IMMEDIATELY TAKE ALL STEPS TO PREVENT POLLUTANT DISCHARGES UNTIL A PERMANENT SOLUTION IS IMPLEMENTED. AS NECESSARY NEW OR MODIFIED CONTROLS MUST BE INSTALLED AND OPERATIONAL, THE REPAIR MUST BE COMPLETED WITHIN 7 DAYS FROM THE TIME OF DISCOVERY. WITHIN 24 HOURS OF A TRIGGERING CONDITION OCCURRING THAT REQUIRES A CORRECTIVE ACTION, A CORRECTIVE ACTION REPORT MUST BE COMPLETED.

N:\PROJECTS\3048-01\CIVIL\DRAWINGS\CURRENT\C-3048-01_ABBREVIATIONS & NOTES.DWG

APPROVED BY:
TOWN OF LEXINGTON PLANNING BOARD

DATE: _____

THIS PLAN IS SUBJECT TO A COVENANT

DATED _____

THIS PLAN IS SUBJECT TO A CERTIFICATE OF

ACTION DATED _____

THIS PLAN IS SUBJECT TO A SPECIAL PERMIT

DATED _____

I _____ TOWN CLERK OF THE TOWN OF LEXINGTON, MASSACHUSETTS HEREBY CERTIFY THAT THE NOTICE OF APPROVAL OF THIS PLAN HAS BEEN RECEIVED AND RECORDED AT THIS OFFICE AND NO NOTICE OF APPEAL WAS RECEIVED DURING THE TWENTY DAYS NEXT AFTER SUCH RECEIPT AND RECORDING OF SAID NOTICE.

TOWN CLERK _____ DATE _____

COMMONWEALTH OF MASSACHUSETTS
CARLTON M. QUINN
CIVIL
No.49923
REGISTERED PROFESSIONAL ENGINEER

5.19.22

PROFESSIONAL ENGINEER FOR
ALLEN & MAJOR ASSOCIATES, INC.

REV	DATE	DESCRIPTION

APPLICANT\OWNER:
131 HARTWELL LLC.
131 HARTWELL AVENUE
LEXINGTON, MA 02421

PROJECT:
DEFINITIVE NON-RESIDENTIAL SUBDIVISION
131 HARTWELL AVENUE
LEXINGTON, MA

PROJECT NO.	3048-01	DATE:	05-19-2022
SCALE:	NONE	DWG. NAME:	C-3048-01
DESIGNED BY:	SJL/CMQ	CHECKED BY:	CMQ

PREPARED BY:

ALLEN & MAJOR ASSOCIATES, INC.
civil engineering ◆ land surveying
environmental consulting ◆ landscape architecture
www.allenmajor.com
100 COMMERCE WAY, SUITE 5
WOBURN MA 01801-8501
TEL: (781) 935-6889
FAX: (781) 935-2896
WOBURN, MA ◆ LAKEVILLE, MA ◆ MANCHESTER, NH

THIS DRAWING HAS BEEN PREPARED IN DIGITAL FORMAT. CLIENT/CLIENT'S REPRESENTATIVE OR CONSULTANTS MAY BE PROVIDED COPIES OF DRAWINGS AND SPECIFCATIONS FOR HIS/HER INFORMATION AND/OR SPECIFIC USE ON THIS PROJECT. DUE TO THE POTENTIAL THAT THE PROVIDED INFORMATION MAY BE MODIFIED UNINTENTIONALLY OR OTHERWISE, ALLEN & MAJOR ASSOCIATES, INC. MAY REMOVE ALL INDICATION OF THE DOCUMENT'S AUTHORSHIP ON THE DIGITAL MEDIA. PRINTED REPRESENTATIONS OR PORTABLE DOCUMENT FORMAT OF THE DRAWINGS AND SPECIFICATIONS ISSUED SHALL BE THE ONLY RECORD COPIES OF ALLEN & MAJOR ASSOCIATES, INC.'S WORK PRODUCT.

DRAWING TITLE: ABBREVIATIONS & NOTES

SHEET No. C-002

Copyright©2021 Allen & Major Associates, Inc.
All Rights Reserved

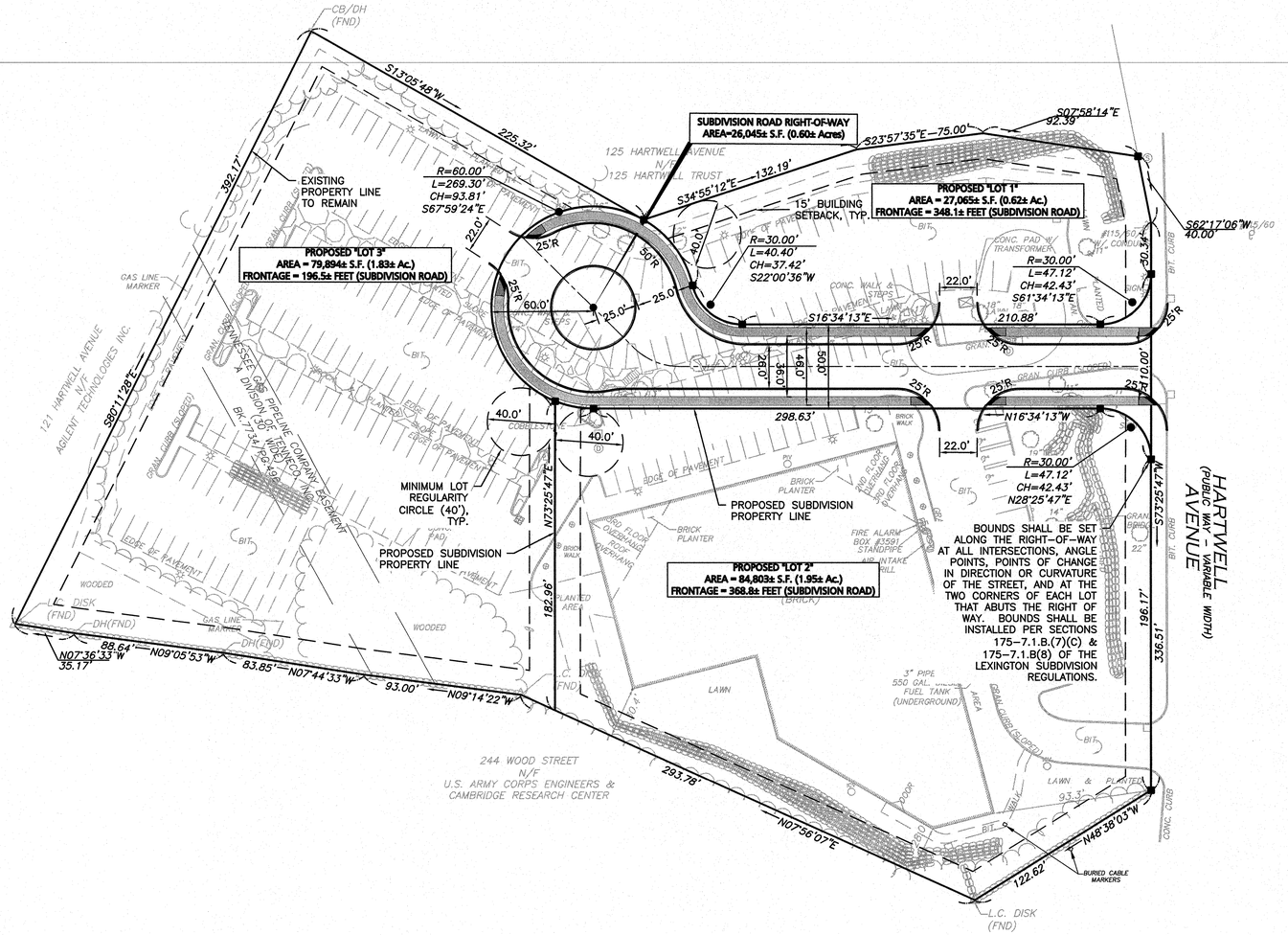

LEGEND

PROP. PROPERTY LINE	
SIGN	
CURB	
TRAFFIC ARROWS	
SIDEWALK	
SETBACK LINE	
BITUMINOUS ASPHALT	BIT.
VERTICAL GRANITE CURB	VGC
SLOPED GRANITE CURB	SGC
STONE BOUND (TBS)	■
IRON ROD (TBS)	●

GENERAL NOTES

1. PROPERTY LINE AND EXISTING SITE CONDITIONS INFORMATION SHOWN HEREON IS TAKEN FROM A PLAN ENTITLED "ALTA/NSPS LAND TITLE SURVEY – 131 HARTWELL AVENUE IN LEXINGTON, MASSACHUSETTS (MIDDLESEX COUNTY)", DATED FEBRUARY 11, 2019, PREPARED BY BSC GROUP, PREPARED FOR PARSADA VENTURES, AND PROVIDED TO ALLEN & MAJOR ASSOCIATES BY AZAD LEGACY PARTNERS. THE INFORMATION SHOWN IS SUBJECT TO FIELD VERIFICATION AND MAY BE UPDATED AS NEEDED.
2. THERE ARE NO WETLANDS ONSITE BASED UPON AVAILABLE MASS DEP GIS MAPS.
3. THE LOCATIONS OF EXISTING UNDERGROUND UTILITIES ARE SHOWN IN AN APPROXIMATE WAY ONLY AND HAVE NOT BEEN INDEPENDENTLY VERIFIED BY THE OWNER OR IT'S REPRESENTATIVE. THE CONTRACTOR SHALL DETERMINE THE EXACT LOCATION OF ALL EXISTING UTILITIES BEFORE COMMENCING WORK, AND AGREES TO BE FULLY RESPONSIBLE FOR ANY AND ALL DAMAGES WHICH MIGHT BE OCCASIONED BY THE CONTRACTOR'S FAILURE TO EXACTLY LOCATE AND PRESERVE ANY AND ALL UNDERGROUND UTILITIES.
4. THE INFORMATION SHOWN ON THIS PLAN IS THE SOLE PROPERTY OF ALLEN & MAJOR ASSOCIATES, INC. IT'S INTENDED USE IS TO PROVIDE INFORMATION. ANY ALTERATION, MISUSE, OR RECALCULATION OF INFORMATION OR DATA WITHOUT THE EXPRESSED, WRITTEN CONSENT OF ALLEN & MAJOR ASSOCIATES, INC. IS STRICTLY PROHIBITED..
5. THE PURPOSE OF THIS PLAN IS TO CREATE A SUBDIVISION ROAD AND THREE PROPOSED LOTS, LOTS 1, 2 AND LOT 3.
6. ALL CURB RADII ARE TO BE 3' UNLESS OTHERWISE NOTED.
7. ABBREVIATION "NR" SHALL SIGNIFY NO REQUIREMENT WITH REGARDS TO ZONING DIMENSIONAL REQUIREMENTS.
8. PROPOSED DRIVEWAY INCORPORATES A 50' WIDE RIGHT-OF-WAY, A 26' WIDE PAVED DRIVEWAY AND A 60' RADIUS CUL-DE-SAC BULB.
9. CONSTRUCTION OF THE PROPOSED ROADWAY SHALL CONFIRM TO 175.2, STREETS AND RIGHTS=OF-WAY. THE PROPOSED STREET INTENDED TO BE A PRIVATE WAY.
10. BOUNDS SHALL BE SET ALONG THE RIGHT-OF-WAY AT ALL INTERSECTIONS, ANGLE POINTS, POINTS OF CHANGE IN DIRECTION OR CURVATURE OF THE STREET, AND AT THE TWO CORNERS OF EACH LOT THAT ABUTS THE RIGHT OF WAY. BOUNDS SHALL BE INSTALLED PER SECTIONS 175-7.1.B.(7)(C) & 175-7.1.B(8) OF THE LEXINGTON SUBDIVISION REGULATIONS.

ZONING SUMMARY TABLE
COMMERCIAL MANUFACTURING ZONING DISTRICT & TRANSPORTATION MANAGEMENT OVERLAY (TMO) DISTRICT

ITEM	REQUIRED ZONING (CM)	PROPOSED LOT 1	PROPOSED LOT 2	PROPOSED LOT 3	PROPOSED SUBDIVISION ROAD
MINIMUM LOT AREA	20,000 S.F. (0.46 Ac.)	27,065 S.F. (0.62 Ac.)	84,803 S.F. (1.95 Ac.)	79,894 S.F. (1.83 Ac.)	26,045 S.F. (0.60 Ac.)
MINIMUM LOT FRONTAGE	50'	348.1'	368.8'	196.5'	N/A
MINIMUM FRONT YARD	NR	NR	NR	NR	NR
MINIMUM SIDE YARD	15'	TBD	TBD	TBD	TBD
MINIMUM REAR YARD	15'	TBD	TBD	TBD	TBD
MAXIMUM FLOOR AREA RATIO	NR	NR	NR	NR	NR
MAXIMUM SITE COVERAGE	NR	NR	NR	NR	NR
MAXIMUM BUILDING STORIES	NR	NR	NR	NR	NR
MAXIMUM BUILDING HEIGHT (INCLUDES ACCESSORY BLDGS)	115'	TBD	TBD	TBD	TBD

GRAPHIC SCALE

40 0 20 40 80 160

(IN FEET)
1 inch = 40 ft.

DIG SAFE

BEFORE YOU DIG
CALL 811 OR
1-888-DIG-SAFE
1-888-344-7233

N:\PROJECTS\3048-01\CIVIL\DRAWINGS\CURRENT\C-3048-01_PROPERTY RIGHTS & DIMENIONS.DWG

WE HEREBY CERTIFY THAT:

THIS PLAN IS THE RESULT OF AN ACTUAL ON THE GROUND SURVEY PERFORMED ON OR BETWEEN NOVEMBER 29, 2021 AND DECEMBER 7, 2021.
THIS PLAN WAS PREPARED IN ACCORDANCE WITH THE RULES AND REGULATIONS OF THE REGISTERS OF DEEDS DATED JANUARY 1, 1976 AND REVISED JANUARY 12, 1988.
OWNERS OF ADJOINING PROPERTIES ARE SHOWN ACCORDING TO CURRENT TOWN OF LEXINGTON ASSESSOR'S INFORMATION.
THE ABOVE IS CERTIFIED TO THE BEST OF MY PROFESSIONAL KNOWLEDGE, INFORMATION AND BELIEF.

ALLEN & MAJOR ASSOCIATES, INC.

May 19, 2022
PROFESSIONAL LAND SURVEYOR FOR ALLEN & MAJOR ASSOCIATES, INC.

COMMONWEALTH OF MASSACHUSETTS
NORMAN I. LIPSITZ
No.28446
PROFESSIONAL LAND SURVEYOR
5/19/22

APPROVED BY:
TOWN OF LEXINGTON PLANNING BOARD

DATE: _____

THIS PLAN IS SUBJECT TO A COVENANT
DATED _____

THIS PLAN IS SUBJECT TO A CERTIFICATE OF
ACTION DATED _____

THIS PLAN IS SUBJECT TO A SPECIAL PERMIT
DATED _____

I _____ TOWN CLERK OF THE TOWN OF LEXINGTON, MASSACHUSETTS HEREBY CERTIFY THAT THE NOTICE OF APPROVAL OF THIS PLAN HAS BEEN RECEIVED AND RECORDED AT THIS OFFICE AND NO NOTICE OF APPEAL WAS RECEIVED DURING THE TWENTY DAYS NEXT AFTER SUCH RECEIPT AND RECORDING OF SAID NOTICE.

TOWN CLERK _____ DATE _____

COMMONWEALTH OF MASSACHUSETTS
CARLTON M. QUINN
CIVIL
No.49923
REGISTERED PROFESSIONAL ENGINEER
5.19.22

PROFESSIONAL ENGINEER FOR
ALLEN & MAJOR ASSOCIATES, INC.

REV	DATE	DESCRIPTION

APPLICANT\OWNER:
131 HARTWELL LLC.
131 HARTWELL AVENUE
LEXINGTON, MA 02421

PROJECT:
DEFINITIVE NON-RESIDENTIAL SUBDIVISION
131 HARTWELL AVENUE
LEXINGTON, MA

PROJECT NO.	3048-01	DATE:	05-19-2022
SCALE:	1" = 40'	DWG. NAME:	C-3048-01
DESIGNED BY:	SJL/CMQ	CHECKED BY:	CMQ

PREPARED BY:

ALLEN & MAJOR ASSOCIATES, INC.
civil engineering ◆ land surveying
environmental consulting ◆ landscape architecture
www.allenmajor.com
100 COMMERCE WAY, SUITE 5
WOBURN MA 01801-8501
TEL: (781) 935-6889
FAX: (781) 935-2896
WOBURN, MA ◆ LAKEVILLE, MA ◆ MANCHESTER, NH

THIS DRAWING HAS BEEN PREPARED IN DIGITAL FORMAT. CLIENT/CLIENT'S REPRESENTATIVE OR CONSULTANTS MAY BE PROVIDED COPIES OF DRAWINGS AND SPECIFICATIONS FOR HIS/HER INFORMATION AND/OR SPECIFIC USE ON THIS PROJECT. DUE TO THE POTENTIAL THAT THE PROVIDED INFORMATION MAY BE MODIFIED UNINTENTIONALLY OR OTHERWISE, ALLEN & MAJOR ASSOCIATES, INC. MAY REMOVE ALL INDICATION OF THE DOCUMENT'S AUTHORSHIP ON THE DIGITAL MEDIA. PRINTED REPRESENTATIONS OR PORTABLE DOCUMENT FORMAT OF THE DRAWINGS AND SPECIFICATIONS ISSUED SHALL BE THE ONLY RECORD COPIES OF ALLEN & MAJOR ASSOCIATES, INC.'S WORK PRODUCT.

DRAWING TITLE:
PROPERTY RIGHTS & DIMENSIONAL STANDARDS PLAN

Copyright©2021 Allen & Major Associates, Inc.
All Rights Reserved

SHEET No.
C-102

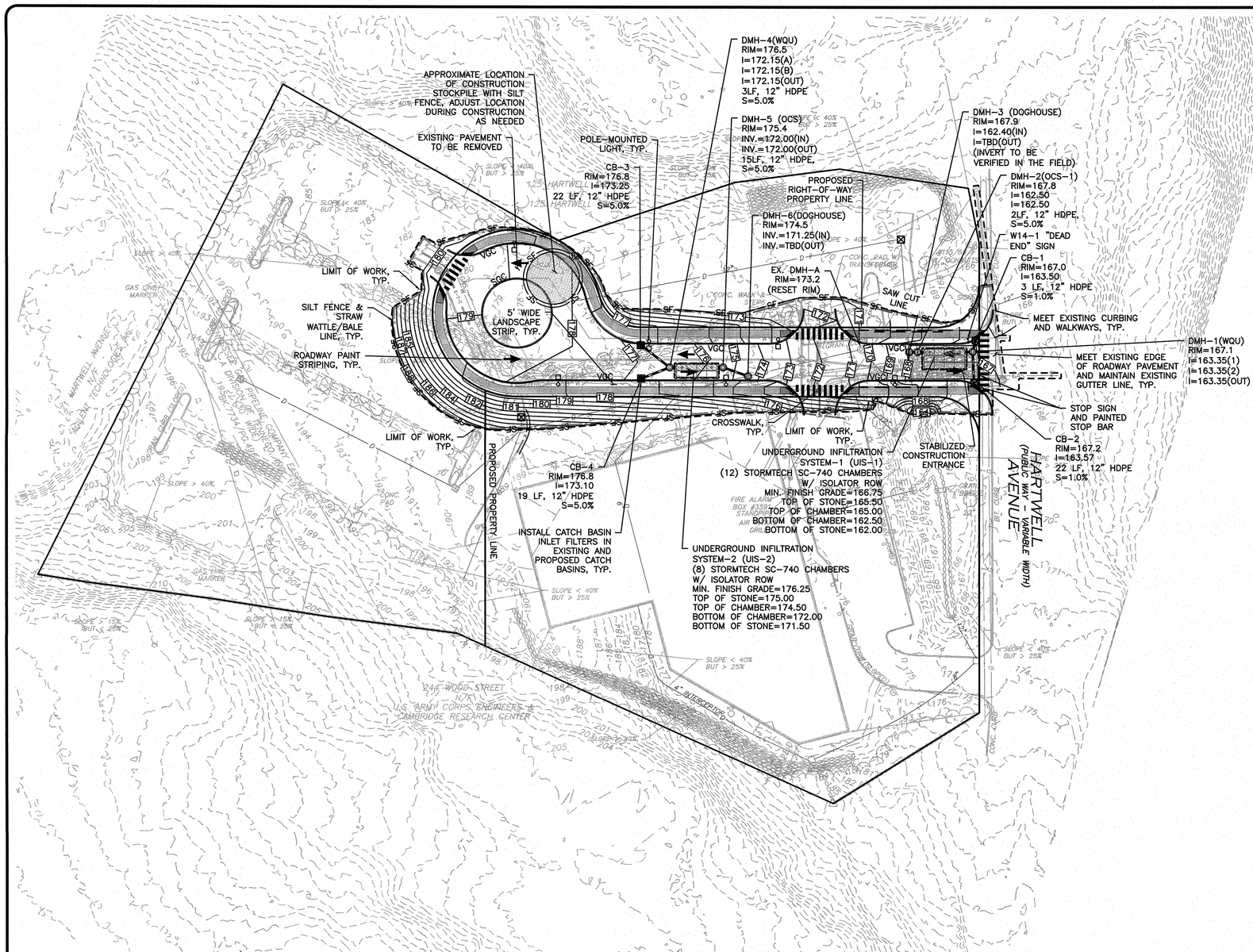

LEGEND

DRAIN MANHOLE	DM
CATCH BASIN	
DIVERSION WEIR	
WATER QUALITY UNIT	WQ
DRAIN LINE	
5' CONTOUR	50
1' CONTOUR	53
PROPOSED SPOT GRADE	×324.50
INFILTRATION SYSTEM	
SUB-SURFACE CHAMBERS	
HIGH/LOW POINT	HP/LP
CATCH BASIN	CB
DRAIN MANHOLE	DMH
WATER QUALITY UNIT	WQU
UNDERGROUND INFILTRATION SYSTEM	UIS
OUTLET CONTROL STRUCTURE	OCS

GENERAL NOTES

1. PROPERTY LINE AND EXISTING SITE CONDITIONS INFORMATION SHOWN HEREON IS TAKEN FROM A PLAN ENTITLED "EXISTING CONDITIONS", DATED OCTOBER 6, 2021, PREPARED BY ALLEN & MAJOR ASSOCIATES.
2. VERTICAL DATUM IS NAVD 88.
3. CONTOUR INTERVAL IS ONE FOOT (1').
4. THE LOCATIONS OF EXISTING UNDERGROUND UTILITIES ARE SHOWN IN AN APPROXIMATE WAY ONLY AND HAVE NOT BEEN INDEPENDENTLY VERIFIED BY THE OWNER OR IT'S REPRESENTATIVE. THE CONTRACTOR SHALL DETERMINE THE EXACT LOCATION OF ALL EXISTING UTILITIES BEFORE COMMENCING WORK, AND AGREES TO BE FULLY RESPONSIBLE FOR ANY AND ALL DAMAGES WHICH MIGHT BE OCCASIONED BY THE CONTRACTOR'S FAILURE TO EXACTLY LOCATE AND PRESERVE ANY AND ALL UNDERGROUND UTILITIES.
5. THE INFORMATION SHOWN ON THIS PLAN IS THE SOLE PROPERTY OF ALLEN & MAJOR ASSOCIATES, INC. IT'S INTENDED USE IS TO PROVIDE INFORMATION. ANY ALTERATION, MISUSE, OR RECALCULATION OF INFORMATION OR DATA WITHOUT THE EXPRESSED, WRITTEN CONSENT OF ALLEN & MAJOR ASSOCIATES, INC. IS STRICTLY PROHIBITED.
6. CONTRACTOR SHALL BE RESPONSIBLE FOR VERIFYING INVERTS OF ALL AFFECTED DRAINAGE STRUCTURES IN THE FIELD.
7. CONSTRUCTION OF THE PROPOSED ROADWAY SHALL CONFORM TO SECTION 175-7.2, STREETS & RIGHT-OF-WAYS. THE PROPOSED DEFINITIVE SUBDIVISION IS INTENDED TO BE AN ACCEPTABLE PUBLIC RIGHT-OF-WAY.

CUT/FILL ANALYSIS

TOTAL CUT* = 2,139.39 CUBIC YARDS (CY)

TOTAL FILL* = 739.32 CY

NET FILL REQUIRED* = 1,401.07 CY

*CUT/FILL NUMBERS WERE OBTAINED USING AUTOCAD CIVIL 3D. EXISTING AND PROPOSED CONTOURS SHOWN WERE DIGITIZED AND A VOLUME ANALYSIS PERFORMED.

STANDARD SIGNAGE TABLE:

MUTCD NUMBER	SIGN	SIZE (MIN)	MOUNTING HEIGHT	DESCRIPTION (3)	RETRO-FLECTIVE
W14-1	DEAD END	24" SIDES	7' - 0"	BLACK ON YELLOW	YES

DIG SAFE

BEFORE YOU DIG
CALL 811 OR
1-888-DIG-SAFE
1-888-344-7233

GRAPHIC SCALE

40 0 20 40 80 160

(IN FEET)
1 inch = 40 ft.

N:\PROJECTS\3048-01\CIVIL\DRAWINGS\CURRENT\C-3048-01_SITE CONSTRUCTION PLAN.DWG

APPROVED BY:
TOWN OF LEXINGTON PLANNING BOARD

DATE: _____

THIS PLAN IS SUBJECT TO A COVENANT
DATED _____

THIS PLAN IS SUBJECT TO A CERTIFICATE OF ACTION DATED _____

THIS PLAN IS SUBJECT TO A SPECIAL PERMIT
DATED _____

I _____ TOWN CLERK OF THE TOWN OF LEXINGTON, MASSACHUSETTS HEREBY CERTIFY THAT THE NOTICE OF APPROVAL OF THIS PLAN HAS BEEN RECEIVED AND RECORDED AT THIS OFFICE AND NO NOTICE OF APPEAL WAS RECEIVED DURING THE TWENTY DAYS NEXT AFTER SUCH RECEIPT AND RECORDING OF SAID NOTICE.

TOWN CLERK _____ DATE _____

COMMONWEALTH OF MASSACHUSETTS
CARLTON M. QUINN
CIVIL
No. 49923
REGISTERED PROFESSIONAL ENGINEER
7.12.22

PROFESSIONAL ENGINEER FOR
ALLEN & MAJOR ASSOCIATES, INC.

REV	DATE	DESCRIPTION
A.	7/12/2022	REVISED PER TOWN COMMENT

APPLICANT\OWNER:
131 HARTWELL LLC.
131 HARTWELL AVENUE
LEXINGTON, MA 02421

PROJECT:
DEFINITIVE NON-RESIDENTIAL SUBDIVISION
131 HARTWELL AVENUE
LEXINGTON, MA

PROJECT NO.	3048-01	DATE:	05-19-2022
SCALE:	1" = 40'	DWG. NAME:	C-3048-01
DESIGNED BY:	SJL/CMQ	CHECKED BY:	CMQ

PREPARED BY:

ALLEN & MAJOR ASSOCIATES, INC.
civil engineering ◆ land surveying
environmental consulting ◆ landscape architecture
www.allenmajor.com
100 COMMERCE WAY, SUITE 5
WOBURN MA 01801-8501
TEL: (781) 935-6889
FAX: (781) 935-2896
WOBURN, MA ◆ LAKEVILLE, MA ◆ MANCHESTER, NH

THIS DRAWING HAS BEEN PREPARED IN DIGITAL FORMAT. CLIENT/CLIENT'S REPRESENTATIVE OR CONSULTANTS MAY BE PROVIDED COPIES OF DRAWINGS AND SPECIFICATIONS FOR HIS/HER INFORMATION AND/OR SPECIFIC USE ON THIS PROJECT. DUE TO THE POTENTIAL THAT THE PROVIDED INFORMATION MAY BE MODIFIED UNINTENTIONALLY OR OTHERWISE, ALLEN & MAJOR ASSOCIATES, INC. MAY REMOVE ALL INDICATION OF THE DOCUMENT'S AUTHORSHIP ON THE DIGITAL MEDIA. PRINTED REPRESENTATIONS OR PORTABLE DOCUMENT FORMAT OF THE DRAWINGS AND SPECIFICATIONS ISSUED SHALL BE THE ONLY RECORD COPIES OF ALLEN & MAJOR ASSOCIATES, INC.'S WORK PRODUCT.

DRAWING TITLE: SITE CONSTRUCTION PLAN

SHEET No. C-103

Copyright©2021 Allen & Major Associates, Inc.
All Rights Reserved

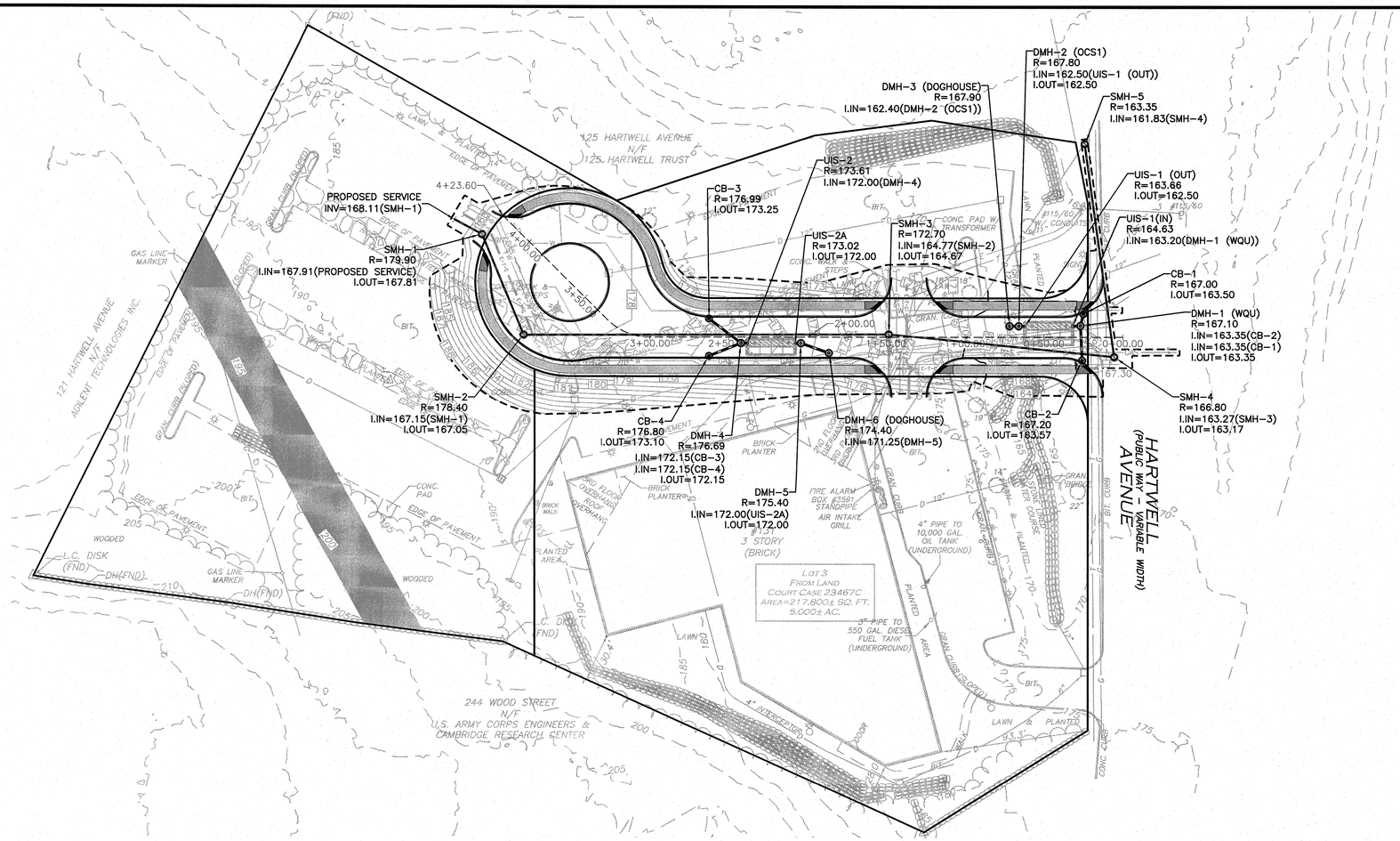

GENERAL NOTES

1. PROPERTY LINE AND EXISTING SITE CONDITIONS INFORMATION SHOWN HEREON IS TAKEN FROM A PLAN ENTITLED "ALTA/ACSM LAND TITLE SURVEY – 24 HARTWELL AVENUE IN LEXINGTON, MASSACHUSETTS (MIDDLESEX COUNTY)", DATED MARCH 17, 2010, PREPARED BY BSC GROUP, PREPARED FOR LEXINGTON MANAGEMENT INC., AND PROVIDED TO ALLEN & MAJOR ASSOCIATES BY GREATLAND REALTY TRUST. THE INFORMATION SHOWN IS SUBJECT TO FIELD VERIFICATION AND MAY BE UPDATED AS NEEDED.
2. VERTICAL DATUM IS NAVD 88.
3. EXISTING CONTOUR INTERVAL IS ONE FOOT (1').
4. PROPOSED CONTOUR INTERVAL IS ONE FOOT (1').
5. CONTOURS SHOWN HEREON HAVE BEEN TRACED FROM TOWN OF LEXINGTON GIS.
6. WETLANDS SHOWN HEREON HAVE BEEN TRACED FROM MASS DEP WEBSITE.
7. THE LOCATIONS OF EXISTING UNDERGROUND UTILITIES ARE SHOWN IN AN APPROXIMATE WAY ONLY AND HAVE NOT BEEN INDEPENDENTLY VERIFIED BY THE OWNER OR ITS REPRESENTATIVE. THE CONTRACTOR SHALL DETERMINE THE EXACT LOCATION OF ALL EXISTING UTILITIES BEFORE COMMENCING WORK, AND AGREES TO BE FULLY RESPONSIBLE FOR ANY AND ALL DAMAGES WHICH MIGHT BE OCCASIONED BY THE CONTRACTOR'S FAILURE TO EXACTLY LOCATE AND PRESERVE ANY AND ALL UNDERGROUND UTILITIES.
8. THE INFORMATION SHOWN ON THIS PLAN IS THE SOLE PROPERTY OF ALLEN & MAJOR ASSOCIATES, INC. ITS INTENDED USE IS TO PROVIDE INFORMATION. ANY ALTERATION, MISUSE, OR RECALCULATION OF INFORMATION OR DATA WITHOUT THE EXPRESSED, WRITTEN CONSENT OF ALLEN & MAJOR ASSOCIATES, INC. IS STRICTLY PROHIBITED.
9. CONTRACTOR SHALL BE RESPONSIBLE FOR VERIFYING INVERTS OF ALL AFFECTED DRAINAGE STRUCTURES IN THE FIELD.
10. ALL UTILITY INSTALLATION SHALL CONFORM TO TOWN OF LEXINGTON STANDARDS.
11. ALL UTILITIES SHOWN ON THIS PLAN ARE FOR GENERAL COORDINATION PURPOSES ONLY. INDIVIDUAL UTILITY PROVIDERS AND MEP ENGINEER SHALL DETERMINE THE EXACT LOCATION IN THE BUILDING & SIZE OF EACH UTILITY & METER.
12. REFER TO GRADING & DRAINAGE PLAN AND UTILITIES PLAN FOR ADDITIONAL INFORMATION.

Proposed Roadway Centerline CENTERLINE PROFILE
VERTICAL EXAGGERATION = 10.0

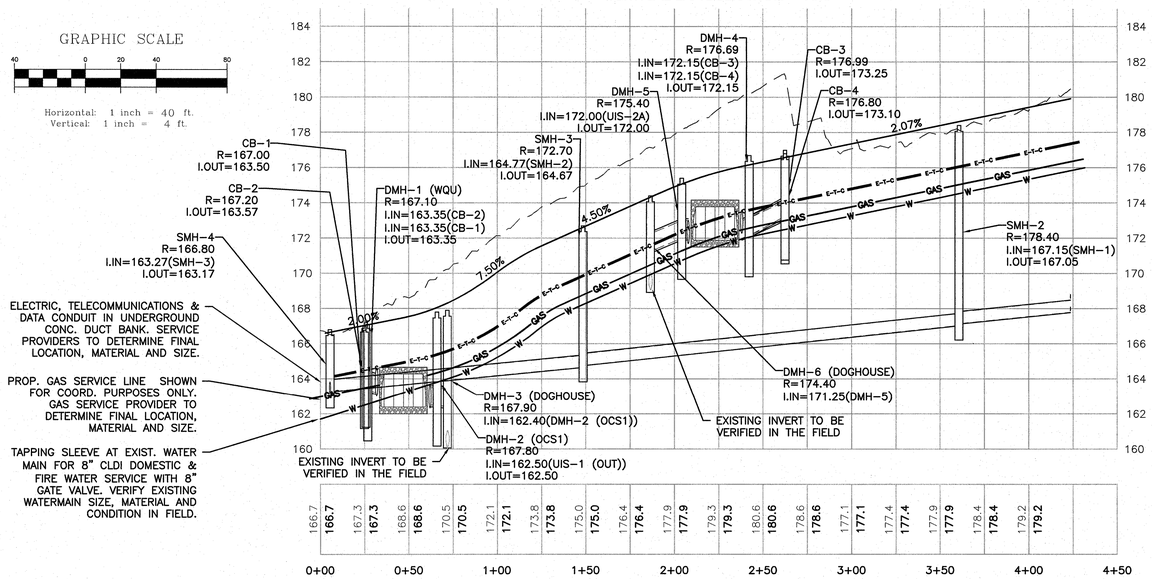

GRAPHIC SCALE

(IN FEET)
1 inch = 40 ft.

N:\PROJECTS\3048-01\CIVIL\DRAWINGS\CURRENT\C-3048-01_PROFILE.DWG

DIG SAFE

BEFORE YOU DIG
CALL 811 OR
1-888-DIG-SAFE
1-888-344-7233

APPROVED BY:
TOWN OF LEXINGTON PLANNING BOARD

DATE: _____

THIS PLAN IS SUBJECT TO A COVENANT
DATED _____

THIS PLAN IS SUBJECT TO A CERTIFICATE OF ACTION DATED _____

THIS PLAN IS SUBJECT TO A SPECIAL PERMIT
DATED _____

I _____, TOWN CLERK OF THE TOWN OF LEXINGTON, MASSACHUSETTS HEREBY CERTIFY THAT THE NOTICE OF APPROVAL OF THIS PLAN HAS BEEN RECEIVED AND RECORDED AT THIS OFFICE AND NO NOTICE OF APPEAL WAS RECEIVED DURING THE TWENTY DAYS NEXT AFTER SUCH RECEIPT AND RECORDING OF SAID NOTICE.

TOWN CLERK _____ DATE _____

COMMONWEALTH OF MASSACHUSETTS
CARLTON M. QUINN
CIVIL
No.49923
REGISTERED PROFESSIONAL ENGINEER
7.12.22

PROFESSIONAL ENGINEER FOR
ALLEN & MAJOR ASSOCIATES, INC.

REV	DATE	DESCRIPTION
A.	7/12/2022	REVISED PER TOWN COMMENT

APPLICANT\OWNER:
131 HARTWELL LLC.
131 HARTWELL AVENUE
LEXINGTON, MA 02421

PROJECT:
DEFINITIVE NON-RESIDENTIAL SUBDIVISION
131 HARTWELL AVENUE
LEXINGTON, MA

PROJECT NO.	3048-01	DATE:	05-19-2022
SCALE:	1" = 40'	DWG. NAME:	C-3048-01
DESIGNED BY:	SJL/CMQ	CHECKED BY:	CMQ

PREPARED BY:

ALLEN & MAJOR ASSOCIATES, INC.
civil engineering ◆ land surveying
environmental consulting ◆ landscape architecture
www.allenmajor.com
100 COMMERCE WAY, SUITE 5
WOBURN MA 01801-8501
TEL: (781) 935-6889
FAX: (781) 935-2896
WOBURN, MA ◆ LAKEVILLE, MA ◆ MANCHESTER, NH

THIS DRAWING HAS BEEN PREPARED IN DIGITAL FORMAT. CLIENT/CLIENT'S REPRESENTATIVE OR CONSULTANTS MAY BE PROVIDED COPIES OF DRAWINGS AND SPECIFICATIONS FOR HIS/HER INFORMATION AND/OR SPECIFIC USE ON THIS PROJECT. DUE TO THE POTENTIAL THAT THE PROVIDED INFORMATION MAY BE MODIFIED UNINTENTIONALLY OR OTHERWISE, ALLEN & MAJOR ASSOCIATES, INC. MAY REMOVE ALL INDICATION OF THE DOCUMENT'S AUTHORSHIP ON THE DIGITAL MEDIA. PRINTED REPRESENTATIONS OR PORTABLE DOCUMENT FORMAT OF THE DRAWINGS AND SPECIFICATIONS ISSUED SHALL BE THE ONLY RECORD COPIES OF ALLEN & MAJOR ASSOCIATES, INC.'S WORK PRODUCT.

DRAWING TITLE:
STREET LAYOUT & PROFILE PLAN

SHEET No.
C-104

Copyright©2021 Allen & Major Associates, Inc.
All Rights Reserved

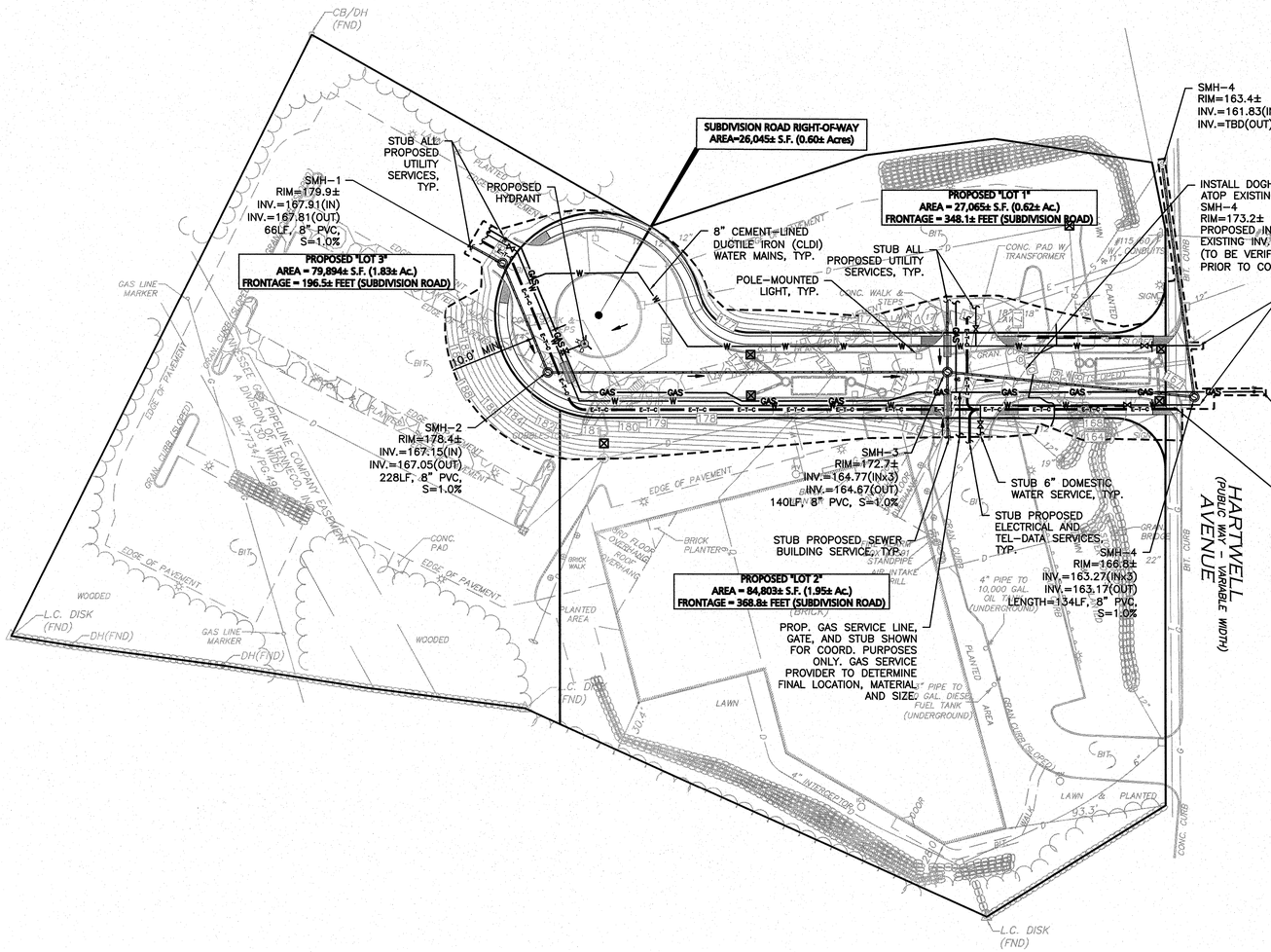

LEGEND

SEWER MANHOLE	S
SEWER LINE	
CONCRETE PIPE ENCASEMENT	
WATER LINE	W
WATER (FIRE SERVICE)	W-F
WATER VALVE	WV
HYDRANT	
GAS LINE	GAS
GAS VALVE	GV
ELEC/TELE/CABLE CONDUIT	E-T-C

GENERAL NOTES

1. PROPERTY LINE AND EXISTING SITE CONDITIONS INFORMATION SHOWN HEREON IS TAKEN FROM A PLAN ENTITLED "EXISTING CONDITIONS", DATED OCTOBER 6, 2021, PREPARED BY ALLEN & MAJOR ASSOCIATES.
2. VERTICAL DATUM IS NAVD 88.
3. CONTOUR INTERVAL IS ONE FOOT (1').
4. THE LOCATIONS OF EXISTING UNDERGROUND UTILITIES ARE SHOWN IN AN APPROXIMATE WAY ONLY AND HAVE NOT BEEN INDEPENDENTLY VERIFIED BY THE OWNER OR IT'S REPRESENTATIVE. THE CONTRACTOR SHALL DETERMINE THE EXACT LOCATION OF ALL EXISTING UTILITIES BEFORE COMMENCING WORK, AND AGREES TO BE FULLY RESPONSIBLE FOR ANY AND ALL DAMAGES WHICH MIGHT BE OCCASIONED BY THE CONTRACTOR'S FAILURE TO EXACTLY LOCATE AND PRESERVE ANY AND ALL UNDERGROUND UTILITIES.
5. THE INFORMATION SHOWN ON THIS PLAN IS THE SOLE PROPERTY OF ALLEN & MAJOR ASSOCIATES, INC. IT'S INTENDED USE IS TO PROVIDE INFORMATION. ANY ALTERATION, MISUSE, OR RECALCULATION OF INFORMATION OR DATA WITHOUT THE EXPRESSED, WRITTEN CONSENT OF ALLEN & MAJOR ASSOCIATES, INC. IS STRICTLY PROHIBITED.
6. CONTRACTOR SHALL BE RESPONSIBLE FOR VERIFYING INVERTS OF ALL AFFECTED DRAINAGE STRUCTURES IN THE FIELD.
7. ALL UTILITY INSTALLATION SHALL CONFORM TO TOWN OF LEXINGTON STANDARDS.
8. ALL UTILITIES SHOWN ON THIS PLAN ARE FOR GENERAL COORDINATION PURPOSES ONLY. INDIVIDUAL UTILITY PROVIDERS AND MEP ENGINEER SHALL DETERMINE THE EXACT LOCATION IN THE BUILDING & SIZE OF EACH UTILITY & METER.
9. ALL MANHOLE RIM ELEVATIONS SHALL BE AT FINISH GRADE.
10. PER TOWN OF LEXINGTON ALL VALVES AND VALVE BOXES SHALL BE AMERICAN MADE ONLY. ALL VALVES SHALL OPEN RIGHT (CLOCKWISE).
11. PER CHAPTER 175.7.1.B.4.A OF THE CODE OF LEXINGTON ALL NEW UTILITY EASEMENTS SHALL BE A MINIMUM OF 20 FEET WIDE.

GRAPHIC SCALE

40 0 20 40 80 160

(IN FEET)
1 inch = 40 ft.

DIG SAFE

BEFORE YOU DIG
CALL 811 OR
1-888-DIG-SAFE
1-888-344-7233

N:\PROJECTS\3048-01\CIVIL\DRAWINGS\CURRENT\C-3048-01_UTILITIES.DWG

APPROVED BY:
TOWN OF LEXINGTON PLANNING BOARD

DATE: _____

THIS PLAN IS SUBJECT TO A COVENANT
DATED _____

THIS PLAN IS SUBJECT TO A CERTIFICATE OF ACTION DATED _____

THIS PLAN IS SUBJECT TO A SPECIAL PERMIT
DATED _____

I _____, TOWN CLERK OF THE TOWN OF LEXINGTON, MASSACHUSETTS HEREBY CERTIFY THAT THE NOTICE OF APPROVAL OF THIS PLAN HAS BEEN RECEIVED AND RECORDED AT THIS OFFICE AND NO NOTICE OF APPEAL WAS RECEIVED DURING THE TWENTY DAYS NEXT AFTER SUCH RECEIPT AND RECORDING OF SAID NOTICE.

TOWN CLERK _____ DATE _____

COMMONWEALTH OF MASSACHUSETTS
CARLTON M. QUINN
CIVIL
No.49923
REGISTERED PROFESSIONAL ENGINEER
7.12.22

PROFESSIONAL ENGINEER FOR
ALLEN & MAJOR ASSOCIATES, INC.

REV	DATE	DESCRIPTION
A.	7/12/2022	REVISED PER TOWN COMMENT

APPLICANT\OWNER:
131 HARTWELL LLC.
131 HARTWELL AVENUE
LEXINGTON, MA 02421

PROJECT:
DEFINITIVE NON-RESIDENTIAL SUBDIVISION
131 HARTWELL AVENUE
LEXINGTON, MA

PROJECT NO.	3048-01	DATE:	05-19-2022
SCALE:	1" = 40'	DWG. NAME:	C-3048-01
DESIGNED BY:	SJL/CMQ	CHECKED BY:	CMQ

PREPARED BY:

ALLEN & MAJOR ASSOCIATES, INC.
civil engineering ◆ land surveying
environmental consulting ◆ landscape architecture
www.allenmajor.com
100 COMMERCE WAY, SUITE 5
WOBURN MA 01801-8501
TEL: (781) 935-6889
FAX: (781) 935-2896
WOBURN, MA ◆ LAKEVILLE, MA ◆ MANCHESTER, NH

THIS DRAWING HAS BEEN PREPARED IN DIGITAL FORMAT. CLIENT/CLIENT'S REPRESENTATIVE OR CONSULTANTS MAY BE PROVIDED COPIES OF DRAWINGS AND SPECIFICATIONS FOR HIS/HER INFORMATION AND/OR SPECIFIC USE ON THIS PROJECT. DUE TO THE POTENTIAL THAT THE PROVIDED INFORMATION MAY BE MODIFIED UNINTENTIONALLY OR OTHERWISE, ALLEN & MAJOR ASSOCIATES, INC. MAY REMOVE ALL INDICATION OF THE DOCUMENT'S AUTHORSHIP ON THE DIGITAL MEDIA. PRINTED REPRESENTATIONS OR PORTABLE DOCUMENT FORMAT OF THE DRAWINGS AND SPECIFICATIONS ISSUED SHALL BE THE ONLY RECORD COPIES OF ALLEN & MAJOR ASSOCIATES, INC.'S WORK PRODUCT.

DRAWING TITLE: UTILITIES PLAN

SHEET No. C-105

Copyright©2021 Allen & Major Associates, Inc.
All Rights Reserved

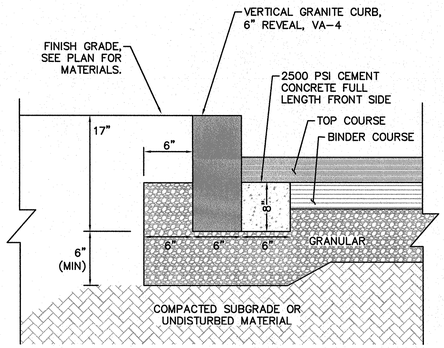

NOTE:
INSTALL PER TOWN STANDARD SPECIFICATIONS.

VERTICAL GRANITE CURBING TYPE VA-4 (VGC) — 1
NOT TO SCALE

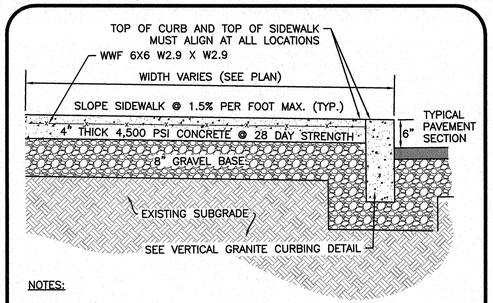

NOTES:

1. SIDEWALK TO HAVE TOOLED JOINTS IN A 5' x 5' (TYP.) GRID WITH EXPANSION JOINTS 15' ON CENTER AND PREMOLDED FILLER
2. TOOLED JOINT 6" FROM FACE OF CURB
3. SEE PLAN FOR ELEVATIONS AT CURB
4. SIDEWALK CROSS SLOPE TO BE 1.5% MAX & SIDEWALK LONGITUDINAL SLOPE TO BE 4.5% MAX, TYP.

CONCRETE SIDEWALK WITH CURB — 2
NOT TO SCALE

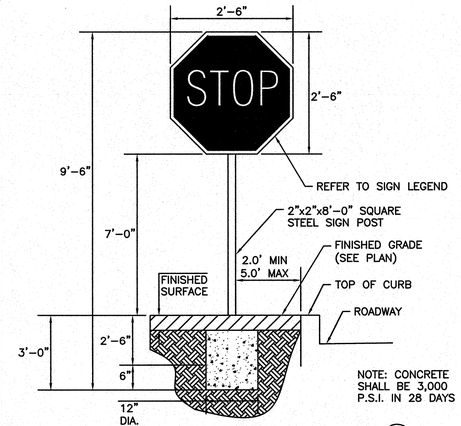

NOTE: CONCRETE SHALL BE 3,000 P.S.I. IN 28 DAYS

STOP SIGN DETAIL — 3
NOT TO SCALE

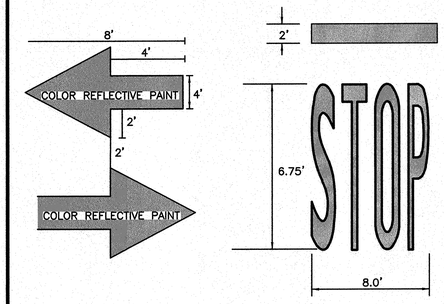

WHITE THERMOPLASTIC LETTERING AND ARROWS — 4
NOT TO SCALE

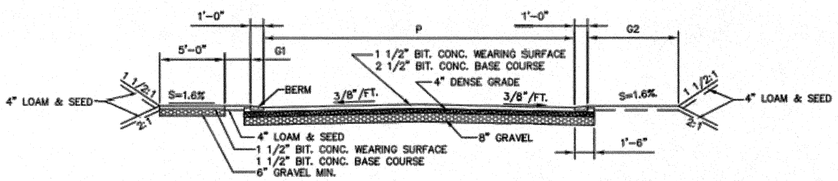

NOTES:
1. TYPICAL CROSS-SECTION FOR COORDINATION PURPOSES ONLY. REFER TO LAYOUT PLAN FOR EXACT DIMENSIONS AND LAYOUT.

TYPICAL 50' MINOR STREET CROSS-SECTIONAL LAYOUT — 5
NOT TO SCALE

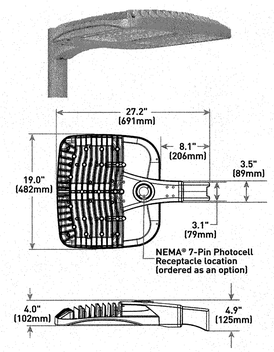

TYPICAL LIGHT FIXTURE - OSQ LED AREA - LARGE — 6
NOT TO SCALE

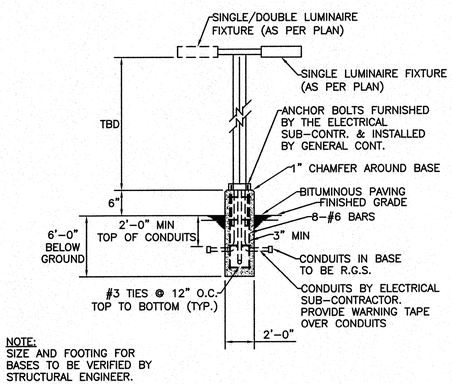

NOTE:
SIZE AND FOOTING FOR BASES TO BE VERIFIED BY STRUCTURAL ENGINEER.

RAISED LIGHT POLE 2' DIAMETER — 7
NOT TO SCALE

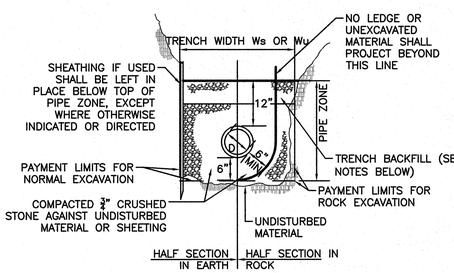

NOTES:

1. TRENCH BACKFILL TO BE USED WITHIN THE RIGHT-OF-WAY SHALL CONSIST OF EITHER GRAVEL BORROW MEETING MHD SPECIFICATION M1.03.0, TYPE "B" OR PROCESSED GRAVEL BORROW FOR SUBBASE MEETING MHD SPECIFICATION M1.03.1.
2. WHERE THE REMOVAL OF 100 SQUARE FEET OR LESS OF ASPHALT IS REQUIRED WITHIN THE RIGHT OF WAY, THEN THE TRENCH BACKFILL MATERIAL SHALL CONSIST OF CONTROLLED DENSITY FILL MEETING MHD SPECIFICATION M4.08.0, TYPE "1E" OR "2E".
3. TRENCH BACKFILL MATERIAL TO BE USED OF THE RIGHT-OF-WAY MAY CONSIST OF MATERIAL GENERATED DURING EXCAVATIONS PROVIDED ALL STONES GREATER THAN 4" ARE REMOVED PRIOR TO PLACEMENT AND COMPACTION
4. GRANULAR TRENCH BACKFILL MATERIAL USED WITHIN THE RIGHT-OF-WAY SHALL BE PLACED IN MAXIMUM 6" LIFTS AND MECHANICALLY COMPACTED TO A MINIMUM OF 95% OF THE MATERIAL'S MAXIMUM DRY DENSITY AND TO 90% ELSEWHERE AS DETERMINED BY ASTM D 1557.

SEWER TRENCH — 9
NOT TO SCALE

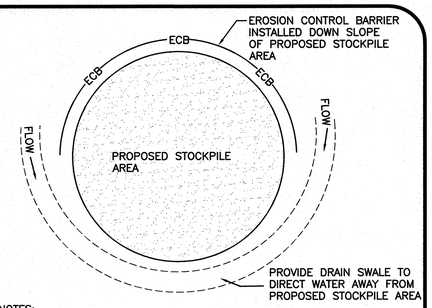

NOTES:
1. SOIL AND FILL STOCKPILES EXPECTED TO REMAIN IN PLACE FOR LESS THAN 90 DAYS SHALL BE COVERED WITH STRAW AND MULCH (AT 100 LBS/1,000 S.F.), OR WITH AN ANCHORED TARP WITHIN 7 DAYS OR PRIOR TO ANY RAINFALL.
2. SOIL AND FILL STOCKPILES EXPECTED TO REMAIN IN PLACE FOR 90 DAYS OR MORE SHALL BE SEEDED WITH WINTER RYE (FOR FALL SEEDING AT 1LB/1,000 SF) OR OATS (FOR SUMMER SEEDING AT 2LB/1,000 SF) AND THEN COVERED WITH HAY MULCH (AT 100LB/1,000 SF) OR AN ANCHORED TARP WITHIN 7 DAYS OR PRIOR TO ANY RAINFALL.

STOCKPILE PROTECTION — 10
NOT TO SCALE

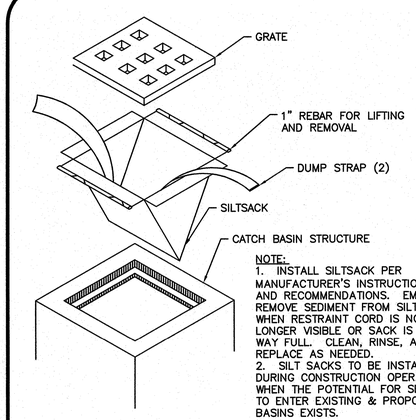

NOTE:
1. INSTALL SILTSACK PER MANUFACTURER'S INSTRUCTIONS AND RECOMMENDATIONS. EMPTY OR REMOVE SEDIMENT FROM SILTSACK WHEN RESTRAINT CORD IS NO LONGER VISIBLE OR SACK IS HALF WAY FULL. CLEAN, RINSE, AND REPLACE AS NEEDED.
2. SILT SACKS TO BE INSTALLED DURING CONSTRUCTION OPERATIONS WHEN THE POTENTIAL FOR SEDIMENT TO ENTER EXISTING & PROPOSED BASINS EXISTS.

SILTSACK INLET DETAIL — 11
NOT TO SCALE

N:\PROJECTS\3048-01\CIVIL\DRAWINGS\CURRENT\C-3048-01_DETAILS.DWG

APPROVED BY:
TOWN OF LEXINGTON PLANNING BOARD

DATE: _____

THIS PLAN IS SUBJECT TO A COVENANT
DATED _____
THIS PLAN IS SUBJECT TO A CERTIFICATE OF ACTION DATED _____
THIS PLAN IS SUBJECT TO A SPECIAL PERMIT
DATED _____

I _____ TOWN CLERK OF THE TOWN OF LEXINGTON, MASSACHUSETTS HEREBY CERTIFY THAT THE NOTICE OF APPROVAL OF THIS PLAN HAS BEEN RECEIVED AND RECORDED AT THIS OFFICE AND NO NOTICE OF APPEAL WAS RECEIVED DURING THE TWENTY DAYS NEXT AFTER SUCH RECEIPT AND RECORDING OF SAID NOTICE.

TOWN CLERK _____ DATE _____

COMMONWEALTH OF MASSACHUSETTS
CARLTON M. QUINN
CIVIL
No. 49923
REGISTERED PROFESSIONAL ENGINEER
5.19.22

PROFESSIONAL ENGINEER FOR
ALLEN & MAJOR ASSOCIATES, INC.

REV	DATE	DESCRIPTION

APPLICANT\OWNER:
131 HARTWELL LLC.
131 HARTWELL AVENUE
LEXINGTON, MA 02421

PROJECT:
DEFINITIVE NON-RESIDENTIAL SUBDIVISION
131 HARTWELL AVENUE
LEXINGTON, MA

PROJECT NO.	3048-01	DATE:	05-19-2022
SCALE:	AS SHOWN	DWG. NAME:	C-3048-01
DESIGNED BY:	SJL/CMQ	CHECKED BY:	CMQ

PREPARED BY:

ALLEN & MAJOR ASSOCIATES, INC.
civil engineering ◆ land surveying
environmental consulting ◆ landscape architecture
www.allenmajor.com
100 COMMERCE WAY, SUITE 5
WOBURN MA 01801-8501
TEL: (781) 935-6889
FAX: (781) 935-2896
WOBURN, MA ◆ LAKEVILLE, MA ◆ MANCHESTER, NH

THIS DRAWING HAS BEEN PREPARED IN DIGITAL FORMAT. CLIENT/CLIENT'S REPRESENTATIVE OR CONSULTANTS MAY BE PROVIDED COPIES OF DRAWINGS AND SPECIFICATIONS FOR HIS/HER INFORMATION AND/OR SPECIFIC USE ON THIS PROJECT. DUE TO THE POTENTIAL THAT THE PROVIDED INFORMATION MAY BE MODIFIED UNINTENTIONALLY OR OTHERWISE, ALLEN & MAJOR ASSOCIATES, INC. MAY REMOVE ALL INDICATION OF THE DOCUMENT'S AUTHORSHIP ON THE DIGITAL MEDIA. PRINTED REPRESENTATIONS OR PORTABLE DOCUMENT FORMAT OF THE DRAWINGS AND SPECIFICATIONS ISSUED SHALL BE THE ONLY RECORD COPIES OF ALLEN & MAJOR ASSOCIATES, INC.'S WORK PRODUCT.

DRAWING TITLE: DETAILS

SHEET No. C-501

Copyright©2021 Allen & Major Associates, Inc.
All Rights Reserved

STORMTECH CHAMBER SPECIFICATIONS

1. CHAMBERS SHALL BE STORMTECH SC-740.
2. CHAMBERS SHALL BE MANUFACTURED FROM VIRGIN POLYPROPYLENE OR POLYETHYLENE RESINS.
3. CHAMBER ROWS SHALL PROVIDE CONTINUOUS, UNOBSTRUCTED INTERNAL SPACE WITH NO INTERNAL SUPPORT PANELS THAT WOULD IMPEDE FLOW OR LIMIT ACCESS FOR INSPECTION.
4. THE STRUCTURAL DESIGN OF THE CHAMBERS, THE STRUCTURAL BACKFILL, AND THE INSTALLATION REQUIREMENTS SHALL ENSURE THAT THE LOAD FACTORS SPECIFIED IN THE AASHTO LRFD BRIDGE DESIGN SPECIFICATIONS, SECTION 12.12, ARE MET FOR: 1) LONG-DURATION DEAD LOADS AND 2) SHORT-DURATION LIVE LOADS, BASED ON THE AASHTO DESIGN TRUCK WITH CONSIDERATION FOR IMPACT AND MULTIPLE VEHICLE PRESENCES.
5. CHAMBERS SHALL MEET ASTM F2922 (POLYETHYLENE) OR ASTM F2418-16 (POLYPROPYLENE), "STANDARD SPECIFICATION FOR THERMOPLASTIC CORRUGATED WALL STORMWATER COLLECTION CHAMBERS".
6. CHAMBERS SHALL BE DESIGNED AND ALLOWABLE LOADS DETERMINED IN ACCORDANCE WITH ASTM F2787, "STANDARD PRACTICE FOR STRUCTURAL DESIGN OF THERMOPLASTIC CORRUGATED WALL STORMWATER COLLECTION CHAMBERS".
7. ONLY CHAMBERS THAT ARE APPROVED BY THE SITE DESIGN ENGINEER WILL BE ALLOWED. THE CHAMBER MANUFACTURER SHALL SUBMIT THE FOLLOWING UPON REQUEST TO THE SITE DESIGN ENGINEER FOR APPROVAL BEFORE DELIVERING CHAMBERS TO THE PROJECT SITE:
   a. A STRUCTURAL EVALUATION SEALED BY A REGISTERED PROFESSIONAL ENGINEER THAT DEMONSTRATES THAT THE SAFETY FACTORS ARE GREATER THAN OR EQUAL TO 1.95 FOR DEAD LOAD AND 1.75 FOR LIVE LOAD, THE MINIMUM REQUIRED BY ASTM F2787 AND BY AASHTO FOR THERMOPLASTIC PIPE.
   b. A STRUCTURAL EVALUATION SEALED BY A REGISTERED PROFESSIONAL ENGINEER THAT DEMONSTRATES THAT THE LOAD FACTORS SPECIFIED IN THE AASHTO LRFD BRIDGE DESIGN SPECIFICATIONS, SECTION 12.12, ARE MET. THE 50 YEAR CREEP MODULUS DATA SPECIFIED IN ASTM F2418 OR ASTM F2922 MUST BE USED AS PART OF THE AASHTO STRUCTURAL EVALUATION TO VERIFY LONG-TERM PERFORMANCE.
   c. STRUCTURAL CROSS SECTION DETAIL ON WHICH THE STRUCTURAL EVALUATION IS BASED.
8. CHAMBERS AND END CAPS SHALL BE PRODUCED AT AN ISO 9001 CERTIFIED MANUFACTURING FACILITY.

IMPORTANT - NOTES FOR THE BIDDING AND INSTALLATION OF THE SC-310/SC-740 SYSTEM

1. STORMTECH SC-310 & SC-740 CHAMBERS SHALL NOT BE INSTALLED UNTIL THE MANUFACTURER'S REPRESENTATIVE HAS COMPLETED A PRE-CONSTRUCTION MEETING WITH THE INSTALLERS.
2. STORMTECH SC-310 & SC-740 CHAMBERS SHALL BE INSTALLED IN ACCORDANCE WITH THE "STORMTECH SC-310/SC-740/DC-780 CONSTRUCTION GUIDE".
3. CHAMBERS ARE NOT TO BE BACKFILLED WITH A DOZER OR AN EXCAVATOR SITUATED OVER THE CHAMBERS. STORMTECH RECOMMENDS 3 BACKFILL METHODS:
   - STONESHOOTER LOCATED OFF THE CHAMBER BED.
   - BACKFILL AS ROWS ARE BUILT USING AN EXCAVATOR ON THE FOUNDATION STONE OR SUBGRADE.
   - BACKFILL FROM OUTSIDE THE EXCAVATION USING A LONG BOOM HOE OR EXCAVATOR.
4. THE FOUNDATION STONE SHALL BE LEVELED AND COMPACTED PRIOR TO PLACING CHAMBERS.
5. JOINTS BETWEEN CHAMBERS SHALL BE PROPERLY SEATED PRIOR TO PLACING STONE.
6. MAINTAIN MINIMUM - 6" (150 mm) SPACING BETWEEN THE CHAMBER ROWS.
7. EMBEDMENT STONE SURROUNDING CHAMBERS MUST BE A CLEAN, CRUSHED, ANGULAR STONE 3/4-2" (20-50 mm).
8. THE CONTRACTOR MUST REPORT ANY DISCREPANCIES WITH CHAMBER FOUNDATION MATERIALS BEARING CAPACITIES TO THE SITE DESIGN ENGINEER.
9. ADS RECOMMENDS THE USE OF "FLEXSTORM CATCH IT" INSERTS DURING CONSTRUCTION FOR ALL INLETS TO PROTECT THE SUBSURFACE STORMWATER MANAGEMENT SYSTEM FROM CONSTRUCTION SITE RUNOFF.

NOTES FOR CONSTRUCTION EQUIPMENT

1. STORMTECH SC-310 & SC-740 CHAMBERS SHALL BE INSTALLED IN ACCORDANCE WITH THE "STORMTECH SC-310/SC-740/DC-780 CONSTRUCTION GUIDE".
2. THE USE OF CONSTRUCTION EQUIPMENT OVER SC-310 & SC-740 CHAMBERS IS LIMITED:
   - NO EQUIPMENT IS ALLOWED ON BARE CHAMBERS.
   - NO RUBBER TIRED LOADERS, DUMP TRUCKS, OR EXCAVATORS ARE ALLOWED UNTIL PROPER FILL DEPTHS ARE REACHED IN ACCORDANCE WITH THE "STORMTECH SC-310/SC-740/DC-780 CONSTRUCTION GUIDE".
   - WEIGHT LIMITS FOR CONSTRUCTION EQUIPMENT CAN BE FOUND IN THE "STORMTECH SC-310/SC-740/DC-780 CONSTRUCTION GUIDE".
3. FULL 36" (900 mm) OF STABILIZED COVER MATERIALS OVER THE CHAMBERS IS REQUIRED FOR DUMP TRUCK TRAVEL OR DUMPING.

USE OF A DOZER TO PUSH EMBEDMENT STONE BETWEEN THE ROWS OF CHAMBERS MAY CAUSE DAMAGE TO THE CHAMBERS AND IS NOT AN ACCEPTABLE BACKFILL METHOD. ANY CHAMBERS DAMAGED BY THE "DUMP AND PUSH" METHOD ARE NOT COVERED UNDER THE STORMTECH STANDARD WARRANTY.

CONTACT STORMTECH AT 1-888-892-2694 WITH ANY QUESTIONS ON INSTALLATION REQUIREMENTS OR WEIGHT LIMITS FOR CONSTRUCTION EQUIPMENT.

ACCEPTABLE FILL MATERIALS: STORMTECH SC-740 CHAMBER SYSTEMS

MATERIAL LOCATION		DESCRIPTION	AASHTO MATERIAL CLASSIFICATIONS	COMPACTION / DENSITY REQUIREMENT
D	**FINAL FILL:** FILL MATERIAL FOR LAYER 'D' STARTS FROM THE TOP OF THE 'C' LAYER TO THE BOTTOM OF FLEXIBLE PAVEMENT OR UNPAVED FINISHED GRADE ABOVE. NOTE THAT PAVEMENT SUBBASE MAY BE PART OF THE 'D' LAYER.	SEE PAVEMENT DETAIL	N/A	SEE PAVEMENT DETAIL
C	**INITIAL FILL:** FILL MATERIAL FOR LAYER 'C' STARTS FROM THE TOP OF THE EMBEDMENT STONE ('B' LAYER) TO 18" (450 mm) ABOVE THE TOP OF THE CHAMBER. NOTE THAT PAVEMENT SUBBASE MAY BE A PART OF THE 'C' LAYER.	GRANULAR WELL-GRADED SOIL/AGGREGATE MIXTURES, <35% FINES OR PROCESSED AGGREGATE. MOST PAVEMENT SUBBASE MATERIALS CAN BE USED IN LIEU OF THIS LAYER.	AASHTO M145[1] A-1, A-2-4, A-3 OR AASHTO M43[1] 3, 357, 4, 467, 5, 56, 57, 6, 67, 68, 7, 78, 8, 89, 9, 10	BEGIN COMPACTIONS AFTER 12" (300 mm) OF MATERIAL OVER THE CHAMBERS IS REACHED. COMPACT ADDITIONAL LAYERS IN 6" (150 mm) MAX LIFTS TO A MIN. 95% PROCTOR DENSITY FOR WELL GRADED MATERIAL AND 95% RELATIVE DENSITY FOR PROCESSED AGGREGATE MATERIALS. ROLLER GROSS VEHICLE WEIGHT NOT TO EXCEED 12,000 lbs (53 kN). DYNAMIC FORCE NOT TO EXCEED 20,000 lbs (89 kN).
B	**EMBEDMENT STONE:** FILL SURROUNDING THE CHAMBERS FROM THE FOUNDATION STONE ('A' LAYER) TO THE 'C' LAYER ABOVE.	CLEAN, CRUSHED, ANGULAR STONE	AASHTO M43[1] 3, 357, 4, 467, 5, 56, 57	NO COMPACTION REQUIRED.
A	**FOUNDATION STONE:** FILL BELOW CHAMBERS FROM THE SUBGRADE UP TO THE FOOT (BOTTOM) OF THE CHAMBER.	CLEAN, CRUSHED, ANGULAR STONE	AASHTO M43[1] 3, 357, 4, 467, 5, 56, 57	PLATE COMPACT OR ROLL TO ACHIEVE A FLAT SURFACE.[2,3]

PLEASE NOTE:
1. THE LISTED AASHTO DESIGNATIONS ARE FOR GRADATIONS ONLY. THE STONE MUST ALSO BE CLEAN, CRUSHED, ANGULAR. FOR EXAMPLE, A SPECIFICATION FOR #4 STONE WOULD STATE: "CLEAN, CRUSHED, ANGULAR NO. 4 (AASHTO M43) STONE".
2. STORMTECH COMPACTION REQUIREMENTS ARE MET FOR 'A' LOCATION MATERIALS WHEN PLACED AND COMPACTED IN 6" (150 mm) (MAX) LIFTS USING TWO FULL COVERAGES WITH A VIBRATORY COMPACTOR.
3. WHERE INFILTRATION SURFACES MAY BE COMPROMISED BY COMPACTION, FOR STANDARD DESIGN LOAD CONDITIONS, A FLAT SURFACE MAY BE ACHIEVED BY RAKING OR DRAGGING WITHOUT COMPACTION EQUIPMENT. FOR SPECIAL LOAD DESIGNS, CONTACT STORMTECH FOR COMPACTION REQUIREMENTS.
4. ONCE LAYER 'C' IS PLACED, ANY SOIL/MATERIAL CAN BE PLACED IN LAYER 'D' UP TO THE FINISHED GRADE. MOST PAVEMENT SUBBASE SOILS CAN BE USED TO REPLACE THE MATERIAL REQUIREMENTS OF LAYER 'C' OR 'D' AT THE SITE DESIGN ENGINEER'S DISCRETION.

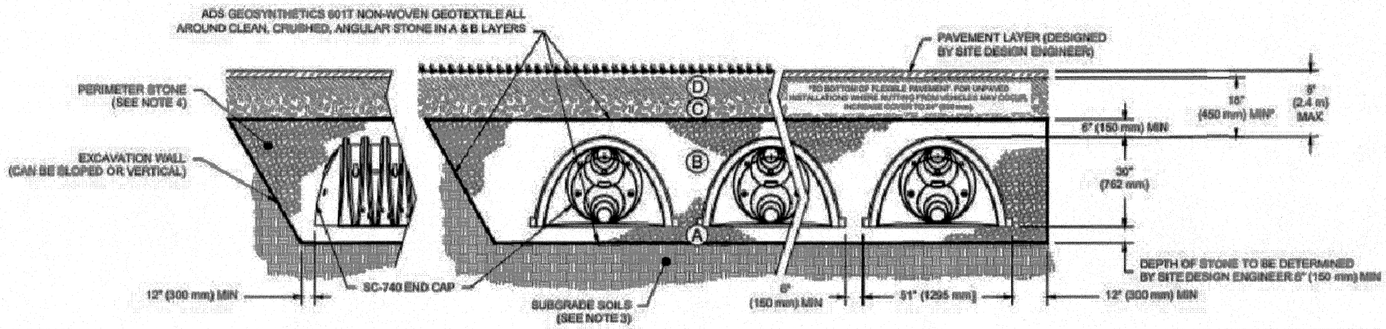

NOTES:

1. CHAMBERS SHALL MEET THE REQUIREMENTS OF ASTM F2418-16a, "STANDARD SPECIFICATION FOR POLYPROPYLENE (PP) CORRUGATED WALL STORMWATER COLLECTION CHAMBERS".
2. SC-740 CHAMBERS SHALL BE DESIGNED IN ACCORDANCE WITH ASTM F2787 "STANDARD PRACTICE FOR STRUCTURAL DESIGN OF THERMOPLASTIC CORRUGATED WALL STORMWATER COLLECTION CHAMBERS".
3. THE SITE DESIGN ENGINEER IS RESPONSIBLE FOR ASSESSING THE BEARING RESISTANCE (ALLOWABLE BEARING CAPACITY) OF THE SUBGRADE SOILS AND THE DEPTH OF FOUNDATION STONE WITH CONSIDERATION FOR THE RANGE OF EXPECTED SOIL MOISTURE CONDITIONS.
4. PERIMETER STONE MUST BE EXTENDED HORIZONTALLY TO THE EXCAVATION WALL FOR BOTH VERTICAL AND SLOPED EXCAVATION WALLS.
5. REQUIREMENTS FOR HANDLING AND INSTALLATION:
   - TO MAINTAIN THE WIDTH OF CHAMBERS DURING SHIPPING AND HANDLING, CHAMBERS SHALL HAVE INTEGRAL, INTERLOCKING STACKING LUGS.
   - TO ENSURE A SECURE JOINT DURING INSTALLATION AND BACKFILL, THE HEIGHT OF THE CHAMBER JOINT SHALL NOT BE LESS THAN 2".
   - TO ENSURE THE INTEGRITY OF THE ARCH SHAPE DURING INSTALLATION, a) THE ARCH STIFFNESS CONSTANT AS DEFINED IN SECTION 6.2.8 OF ASTM F2418 SHALL BE GREATER THAN OR EQUAL TO 550 LBS/IN/IN. AND b) TO RESIST CHAMBER DEFORMATION DURING INSTALLATION AT ELEVATED TEMPERATURES (ABOVE 73° F / 23° C), CHAMBERS SHALL BE PRODUCED FROM REFLECTIVE GOLD OR YELLOW COLORS.

SC-740 STANDARD DETAIL (1)
NOT TO SCALE

ADVANCED DRAINAGE SYSTEMS, INC.

NOTES:

SEE DRAINAGE PLAN, SHEET C–102 FOR SITE–SPECIFIC ELEVATIONS, INVERTS AND SYSTEM DETAILS.

NOT FOR CONSTRUCTION

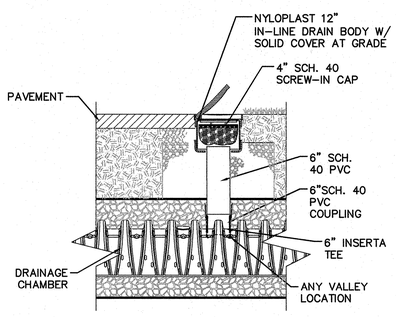

NOTES:
1. INSPECTION PORTS MAY BE CONNECTED THROUGH ANY CHAMBER CORRUGATION VALLEY
2. ALL SCHEDULE 40 FITTINGS TO BE SOLVENT CEMENTED.

TYPICAL DRAINAGE INSPECTION PORT (2)
NOT TO SCALE

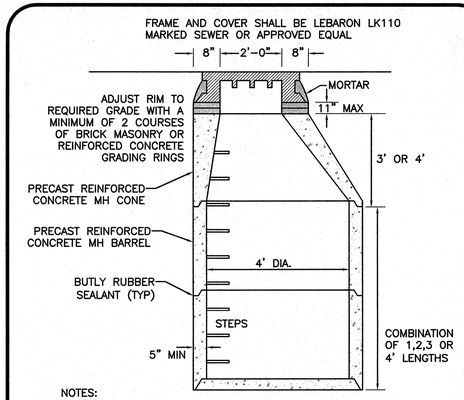

NOTES:
1. ALL EXTERIOR SURFACES OF MANHOLE GRADE ADJUSTMENT COURSES SHALL BE COVERED WITH $\frac{1}{2}$" TO $\frac{5}{8}$" MASONRY CEMENT PLASTER.
2. PROVIDE SHOP DRAWING FOR REVIEW & APPROVAL.

PRECAST CONCRETE SEWER MANHOLE (3)
NOT TO SCALE

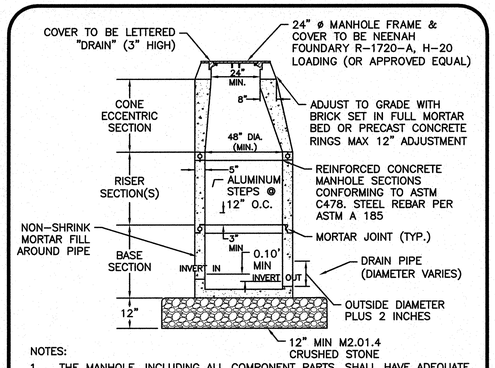

NOTES:
1. THE MANHOLE, INCLUDING ALL COMPONENT PARTS, SHALL HAVE ADEQUATE SPACE AND STRENGTH QUALITIES CONSIDERED NECESSARY FOR THE INTENDED SERVICE. SPACE REQUIREMENT AND CONFIGURATIONS SHALL BE AS SHOWN ON THE DRAWING. THE COMPLETE STRUCTURE SHALL BE OF SUCH MATERIAL AND QUALITY AS TO WITHSTAND (H–20 LOADING) WITHOUT FAILURE.

VERTICAL FOOT OF MANHOLE.

PRECAST DRAIN MANHOLE (4)
NOT TO SCALE

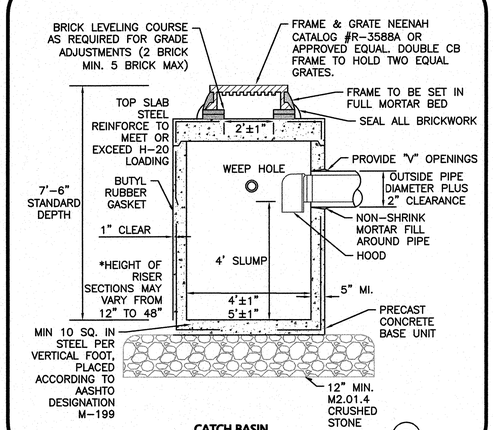

CATCH BASIN (3)
NOT TO SCALE

N:\PROJECTS\3048–01\CIVIL\DRAWINGS\CURRENT\C–3048–01_DETAILS.DWG

APPROVED BY:
TOWN OF LEXINGTON PLANNING BOARD

DATE: _____

THIS PLAN IS SUBJECT TO A COVENANT DATED _____

THIS PLAN IS SUBJECT TO A CERTIFICATE OF ACTION DATED _____

THIS PLAN IS SUBJECT TO A SPECIAL PERMIT DATED _____

I _____ TOWN CLERK OF THE TOWN OF LEXINGTON, MASSACHUSETTS HEREBY CERTIFY THAT THE NOTICE OF APPROVAL OF THIS PLAN HAS BEEN RECEIVED AND RECORDED AT THIS OFFICE AND NO NOTICE OF APPEAL WAS RECEIVED DURING THE TWENTY DAYS NEXT AFTER SUCH RECEIPT AND RECORDING OF SAID NOTICE.

TOWN CLERK _____ DATE _____

COMMONWEALTH OF MASSACHUSETTS
CARLTON M. QUINN
CIVIL
No.49923
REGISTERED PROFESSIONAL ENGINEER
5.19.22

PROFESSIONAL ENGINEER FOR ALLEN & MAJOR ASSOCIATES, INC.

REV	DATE	DESCRIPTION

APPLICANT\OWNER:
131 HARTWELL LLC.
131 HARTWELL AVENUE
LEXINGTON, MA 02421

PROJECT:
DEFINITIVE NON-RESIDENTIAL SUBDIVISION
131 HARTWELL AVENUE
LEXINGTON, MA

PROJECT NO.	3048-01	DATE:	05-19-2022
SCALE:	AS SHOWN	DWG. NAME:	C-3048-01
DESIGNED BY:	SJL/CMQ	CHECKED BY:	CMQ

PREPARED BY:
ALLEN & MAJOR ASSOCIATES, INC.
civil engineering ◆ land surveying
environmental consulting ◆ landscape architecture
www.allenmajor.com
100 COMMERCE WAY, SUITE 5
WOBURN MA 01801-8501
TEL: (781) 935-6889
FAX: (781) 935-2896
WOBURN, MA ◆ LAKEVILLE, MA ◆ MANCHESTER, NH

THIS DRAWING HAS BEEN PREPARED IN DIGITAL FORMAT. CLIENT/CLIENT'S REPRESENTATIVE OR CONSULTANTS MAY BE PROVIDED COPIES OF DRAWINGS AND SPECIFICATIONS FOR HIS/HER INFORMATION AND/OR SPECIFIC USE ON THIS PROJECT. DUE TO THE POTENTIAL THAT THE PROVIDED INFORMATION MAY BE MODIFIED UNINTENTIONALLY OR OTHERWISE, ALLEN & MAJOR ASSOCIATES, INC. MAY REMOVE ALL INDICATION OF THE DOCUMENT'S AUTHORSHIP ON THE DIGITAL MEDIA. PRINTED REPRESENTATIONS OR PORTABLE DOCUMENT FORMAT OF THE DRAWINGS AND SPECIFICATIONS ISSUED SHALL BE THE ONLY RECORD COPIES OF ALLEN & MAJOR ASSOCIATES, INC.'S WORK PRODUCT.

DRAWING TITLE: DETAILS

SHEET No. C-502

Copyright©2021 Allen & Major Associates, Inc.
All Rights Reserved

NOT FOR CONSTRUCTION

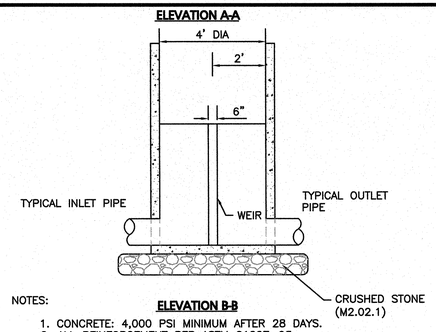

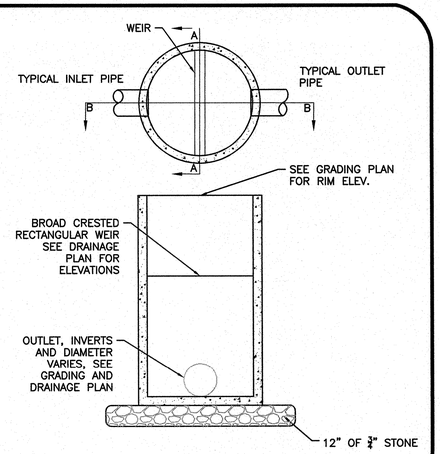

NOTES:

1. CONCRETE: 4,000 PSI MINIMUM AFTER 28 DAYS.
2. ALL REINFORCEMENT PER ASTM C1227-93.
3. TONGUE & GROOVE JOINT SEALED WITH BUTYLE RESIN OR MASTIC.
4. WALLS ARE TO BE 6" THICK & BOTTOM TO BE 8" THICK.
5. PROVIDE 4' SUMP.
6. SEE GRADING AND DRAINAGE PLAN FOR RIM, INVERT AND WEIR ELEVATIONS, MATERIAL AND MORE INFORMATION.

4' DIAMETER OUTLET CONTROL STRUCTURE (1)
NOT TO SCALE

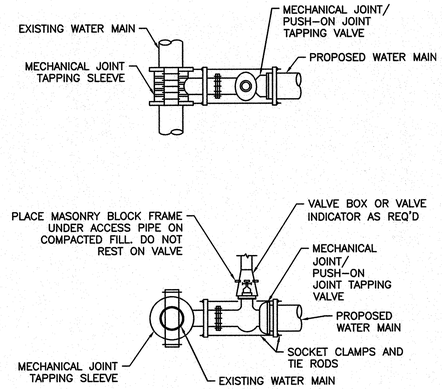

TAPPING VALVE AND SLEEVE (2)
NOT TO SCALE

NOTES:

1. ALL WATER MAIN FITTINGS, BENDS, TEES, PLUGS ETC. SHALL BE RESTRAINED W/ THRUST BLOCKS EXCEPT WHERE NOTED.
2. ALL THRUST BLOCKS & COLLARS SHALL BE INSTALLED SO THAT THEY BEAR AGAINST UNDISTURBED EARTH.
3. SIZE OF CONCRETE THRUST BLOCKS SHALL BE AS NOTED BELOW.
4. MINIMUM COMPRESSIVE STRENGTH OF THRUST BLOCK CONCRETE SHALL BE 3,000 P.S.I.
5. KEEP CONCRETE CLEAR OF MECHANICAL JOINTS.
6. THE BELOW PREDICATED ON A WATER PRESSURE OF 225 PSI AND A SOIL RESISTANCE OF 2000 PSF (TILL). FOR OTHER SOILS THE VALUES IN THE ABOVE TABLE SHALL BE MULTIPLIED BY:

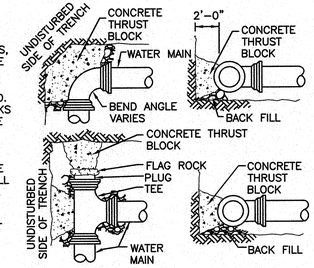

MINIMUM THRUST BLOCK BEARING AREAS				
PIPE ø	90° BEND (SQ. FT.)	45° BEND (SQ. FT.)	22.5° BEND (SQ. FT.)	TEES, PLUGS, CAPS & HYD. (SQ.FT.)
6"	5	3	3	4
8"	9	6	3	9
10"	13	7	4	12
12"	20	10	5	16

THRUST BLOCK DETAILS (3)
NOT TO SCALE

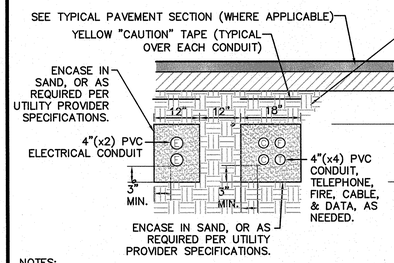

NOTES:

1. CONDUITS SHALL BE SCHEDULE 80 PVC UNDER ROAD AND DRIVEWAY SURFACES.
2. ALL UTILITY INSTALLATION REQUIREMENTS, SEPARATIONS, AND CONDUIT SIZES TO BE VERIFIED WITH EACH UTILITY COMPANY PRIOR TO INSTALLATION OF ANY UNDERGROUND UTILITY CONDUIT.
3. SEE SITE ELECTRICAL PLANS FOR SPECIFIC SERVICE PROVIDER DETAILS.

BURIED CONDUIT DETAIL (5)
NOT TO SCALE

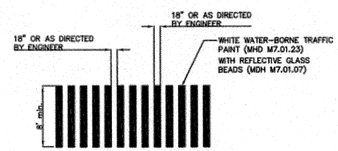

CROSSWALK ALL LOCATIONS

NOTES:

1. WHERE PROVIDED, STOP LINES SHOULD BE PLACED NO LESS THAN 4 FEET BEHIND AN ADJACENT CROSSWALK LINE.
2. MID-BLOCK CROSSWALKS SHALL NOT BE INSTALLED IN AREAS WITH THE SIGHT DISTANCE LESS THAN THAT SHOWN IN THE TABLE BELOW.

TYPICAL TOWN OF LEXINGTON CROSSWALK (6)
NOT TO SCALE

NOTES:

1. MINIMUM BURIAL DEPTH (FINISH GRADE TO TOP OF PIPE)
   GRAVITY PIPE (SEWER & DRAIN) – SEE PLAN OR PROFILE
   PRESSURE PIPE UNDER PAVING – 4'
   PRESSURE PIPE BENEATH UNPAVED – 3'
   WATER PIPE – 5'
2. WHERE BACKFILL IS DESIGNATED AS COMPACTED, THIS MEANS 90 TO 95% STANDARD PROCTOR. AASHTO T-99. ALL FILL PLACED BELOW PIPES AND STRUCTURES MUST MEET THIS REQUIREMENT.
3. TRENCHES WITHIN PUBLIC RIGHT OF WAY MAY REQUIRE FLOWABLE FILL. VERIFY WITH MUNICIPAL ENGINEER.
4. WHERE WASTE FILLS ARE ENCOUNTERED AT SUBGRADE LEVEL FOR NEW UTILITIES, THE FILL SHOULD BE OVER-EXCAVATED, THE SUBGRADE SHOULD BE RE-COMPACTED, AND BACKFILL CONSISTING OF PIPE BEDDING MATERIAL, CRUSHED STONE OR OTHER SUITABLE GRANULAR FILL SHOULD BE PLACED TO A SUFFICIENT DEPTH TO CREATE A FIRM AND STABLE SUBGRADE (TYPICALLY 12 TO 18 INCHES OVER-EXCAVATION).
5. REFER TO PAVING, CURBS, WALKS AND DRIVEWAY DETAILS.

FILTER FABRIC USE

	SOIL TYPE	
	SILT OR CLAY	GRANULAR SOIL
ABOVE GROUND WATER	FILTER FABRIC NOT REQUIRED	FILTER FABRIC NOT REQUIRED
BELOW GROUND WATER	FILTER FABRIC REQUIRED	FILTER FABRIC NOT REQUIRED

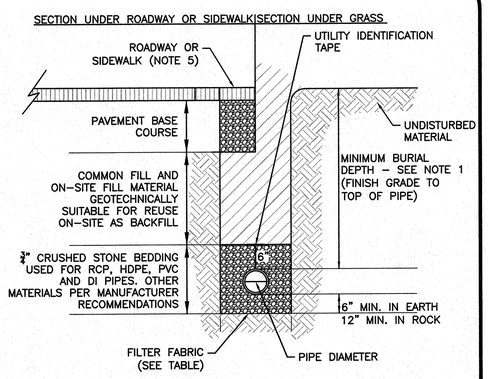

UTILITY TRENCH (7)
NOT TO SCALE

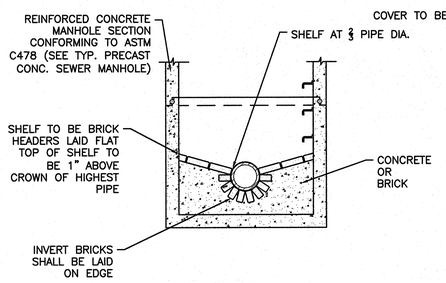

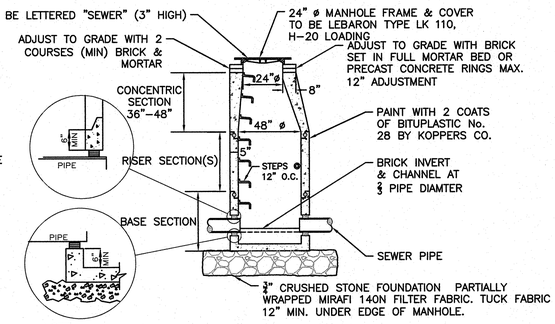

NOTES:

1. INVERT AND SHELF TO BE PLACED AFTER LEAKAGE TEST.
2. MANHOLES SHALL HAVE A BRICK PAVED SHELF AND INVERT, CONSTRUCTED TO CONFORM TO THE SIZE OF PIPE AND FLOW. AT CHANGES IN DIRECTION, THE INVERTS SHALL BE LAID OUT IN CURVES OF THE LONGEST RADIUS POSSIBLE TANGENT TO THE CENTER LINE OF THE HIGHEST PIPE CROWN AND SLOPE TO DRAIN TOWARD THE FLOWING THROUGH CHANNEL. UNDERLAYMENT OF INVERT AND SHELF SHALL CONSIST OF CEMENT CONCRETE OR BRICK IN MORTAR.

NOTE:

THE MANHOLE, INCLUDING ALL COMPONENT PARTS, SHALL HAVE ADEQUATE SPACE, STRENGTH AND LEAK PROOF QUALITIES CONSIDERED NECESSARY FOR THE INTENDED SERVICE SPACE REQUIREMENT AND CONFIGURATIONS SHALL BE AS SHOWN ON THE DRAWING. MANHOLES MAY BE AN ASSEMBLY OR PRECAST SECTIONS, WITH OR WITHOUT STEEL REINFORCEMENT, WITH ADEQUATE JOINTING OR CONCRETE CAST MONOLITHICALLY IN PLACE WITH OR WITHOUT REINFORCEMENT. IN ANY APPROVED MANHOLE, THE COMPLETE STRUCTURE SHALL BE OF SUCH MATERIAL AND QUALITY AS TO WITHSTAND LOADS OF 8 TONS (H-20 LOADING) WITHOUT FAILURE AND PREVENT LEAKAGE IN EXCESS OF ONE GALLON PER DAY PER VERTICAL FOOT OF MANHOLE.

PRECAST CONCRETE SEWER MANHOLE (9)
NOT TO SCALE

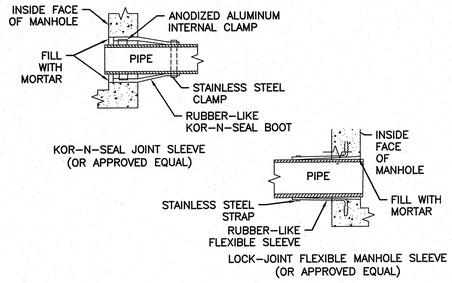

NOTES:

1. PIPE TO MANHOLE JOINTS SHALL BE ONLY AS APPROVED BY THE ENGINEER AND IN GENERAL, WILL DEPEND FOR WATER TIGHTNESS UPON ELASTOMETRIC SEALANT
2. NON-SHRINKING MORTAR SHALL ONLY BE USED WHERE SPECIFICALLY APPROVED BY THE ENGINEER.

PIPE CONNECTION TO SEWER MANHOLE (4)
NOT TO SCALE

N:\PROJECTS\3048-01\CIVIL\DRAWINGS\CURRENT\C-3048-01_DETAILS.DWG

APPROVED BY:
TOWN OF LEXINGTON PLANNING BOARD

DATE: _____

THIS PLAN IS SUBJECT TO A COVENANT
DATED _____
THIS PLAN IS SUBJECT TO A CERTIFICATE OF ACTION DATED _____
THIS PLAN IS SUBJECT TO A SPECIAL PERMIT
DATED _____

I _____, TOWN CLERK OF THE TOWN OF LEXINGTON, MASSACHUSETTS HEREBY CERTIFY THAT THE NOTICE OF APPROVAL OF THIS PLAN HAS BEEN RECEIVED AND RECORDED AT THIS OFFICE AND NO NOTICE OF APPEAL WAS RECEIVED DURING THE TWENTY DAYS NEXT AFTER SUCH RECEIPT AND RECORDING OF SAID NOTICE.

TOWN CLERK _____ DATE _____

COMMONWEALTH OF MASSACHUSETTS
CARLTON M. QUINN
CIVIL
No. 49923
REGISTERED PROFESSIONAL ENGINEER
5.19.22

PROFESSIONAL ENGINEER FOR
ALLEN & MAJOR ASSOCIATES, INC.

REV	DATE	DESCRIPTION

APPLICANT\OWNER:
131 HARTWELL LLC.
131 HARTWELL AVENUE
LEXINGTON, MA 02421

PROJECT:
DEFINITIVE NON-RESIDENTIAL SUBDIVISION
131 HARTWELL AVENUE
LEXINGTON, MA

PROJECT NO.	3048-01	DATE:	05-19-2022
SCALE:	AS SHOWN	DWG. NAME:	C-3048-01
DESIGNED BY:	SJL/CMQ	CHECKED BY:	CMQ

PREPARED BY:

ALLEN & MAJOR ASSOCIATES, INC.
civil engineering ◆ land surveying
environmental consulting ◆ landscape architecture
www.allenmajor.com
100 COMMERCE WAY, SUITE 5
WOBURN MA 01801-8501
TEL: (781) 935-6889
FAX: (781) 935-2896
WOBURN, MA ◆ LAKEVILLE, MA ◆ MANCHESTER, NH

THIS DRAWING HAS BEEN PREPARED IN DIGITAL FORMAT. CLIENT/CLIENT'S REPRESENTATIVE OR CONSULTANTS MAY BE PROVIDED COPIES OF DRAWINGS AND SPECIFICATIONS FOR HIS/HER INFORMATION AND/OR SPECIFIC USE ON THIS PROJECT. DUE TO THE POTENTIAL THAT THE PROVIDED INFORMATION MAY BE MODIFIED UNINTENTIONALLY OR OTHERWISE, ALLEN & MAJOR ASSOCIATES, INC. MAY REMOVE ALL INDICATION OF THE DOCUMENT'S AUTHORSHIP ON THE DIGITAL MEDIA. PRINTED REPRESENTATIONS OR PORTABLE DOCUMENT FORMAT OF THE DRAWINGS AND SPECIFICATIONS ISSUED SHALL BE THE ONLY RECORD COPIES OF ALLEN & MAJOR ASSOCIATES, INC.'S WORK PRODUCT.

DRAWING TITLE: DETAILS

SHEET No. C-503

Copyright©2021 Allen & Major Associates, Inc.
All Rights Reserved

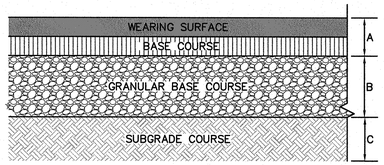

NOTES:

1. COMPACT SOIL SUBGRADE UNIFORMLY TO AT LEAST 95 PERCENT OF ASTM D1557 LABORATORY DENSITY.
2. PROOF-ROLL PREPARED SUBGRADE TO IDENTIFY SIFT POCKETS AND AREAS OF EXCESS YIELDING. EXCAVATE SOFT SPOTS, UNSATISFACTORY SOILS, AND AREAS OF EXCESSIVE PUMPING OR RUTTING, AS DETERMINED BY GEOTECHNICAL ENGINEER AND REPLACE WITH COMPACTED BACKFILL OR FILL AS DIRECTED.
3. CONTRACTOR SHALL COORDINATE SURFACE, BINDER, BASE, AND SUBBASE COURSES WITH GEOTECHNICAL OR SOILS REPORT. REFER TO REPORT FOR RECOMMENDATIONS FOR LOCAL SOILS OR DRAINAGE CONDITIONS AND/OR METHODS.
4. BASE COURSE SHALL EXTEND 6 INCHES MIN. BEYOND PAVEMENT EDGE WHERE PAVEMENT DOES NOT ABUT CURB, WALL, STEPS, OR FIXED OBJECT.
5. PAVEMENT EDGES SHALL BE TAMPED WHERE PAVEMENT DOES NOT ABUT CURB, WALL, STEPS, OR FIXED OBJECT.
6. PROVIDE SHOP DRAWING FOR APPROVAL.

STANDARD DUTY PAVING

A= 1.5" BITUMINOUS ASPHALT CONCRETE – WEARING SURFACE COURSE (M.3.11.3, TABLE A, TOP COURSE)

2.5" ASPHALT CONCRETE – BASE COURSE (M.3.11.3, TABLE A, BINDER COURSE)

B= 4" DENSE GRADE BASE COURSE (MHD 2.01.7)

C= 8" GRAVEL SUBBASE COURSE (MHD 1.03.1, PROCESSED GRAVEL FOR SUBBASE)

STANDARD DUTY BITUMINOUS PAVEMENT (1)
NOT TO SCALE

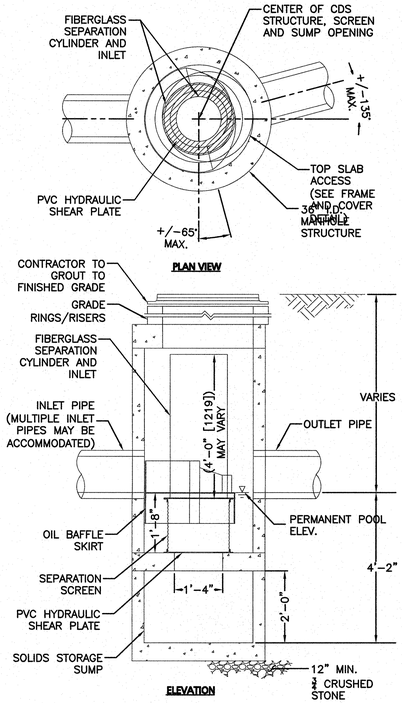

NOTES:

1. SEE PLAN FOR PIPE ALIGNMENT AND ELEVATIONS.
2. SUBMIT SHOP DRAWINGS FOR REVIEW AND APPROVAL.
3. INSTALL PER MANUFACTURER'S RECOMMENDATIONS.

WATER QUALITY UNITS - CONTECH CDS1515-3 (2)
NOT TO SCALE

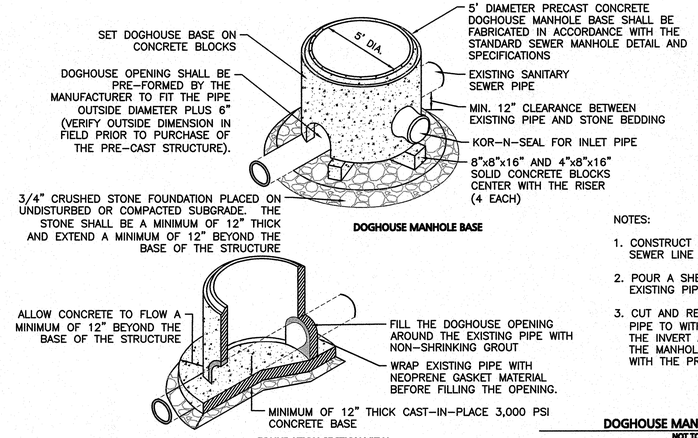

NOTES:

1. CONSTRUCT A FORMED INVERT FROM THE NEW SEWER LINE TO ALLOW FLOW TO THE EXISTING PIPE.
2. POUR A SHELF TO THE LOWER HALF OF THE EXISTING PIPE.
3. CUT AND REMOVE THE TOP HALF OF THE EXISTING PIPE TO WITHIN 6" OF THE MANHOLE WALLS AFTER THE INVERT AND SHELF HAVE BEEN FORMED AND THE MANHOLE HAS BEEN TESTED IN ACCORDANCE WITH THE PROJECT SPECIFICATIONS.

DOGHOUSE MANHOLE STRUCTURE (3)
NOT TO SCALE

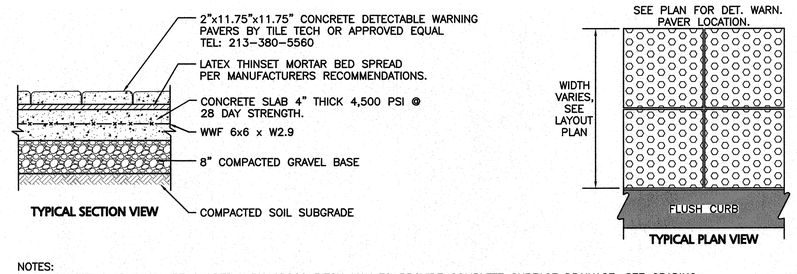

NOTES:

1. CONCRETE SLAB SHALL BE SLOPED 1.5% CROSS PITCH MAX TO PROVIDE COMPLETE SURFACE DRAINAGE. SEE GRADING PLAN & HANDICAP CURB CUT / CURB TRANSISTION DETAIL.
2. SLAB TO HAVE STEEL TROWEL AND FINE BROOM FINISH. DO NOT USE CURING COMPOUNDS. CONTRACTOR TO ADD EXPANSION JOINTS AND PREMOLDED FILLER AT EDGE OF TILES AND ADJACENT MATERIAL.
3. SET TILES FLUSH WITH ADJACENT MATERIALS.
4. SUBMIT SHOP DRAWINGS OF TILES AND SAMPLE FOR APPROVAL OF COLOR TO OWNER / ARCH.
5. INSTALL DETECTABLE WARNING PAVERS PER MANUFACTURER'S RECOMMENDATIONS OR DESIGN ENGINEER.
6. ALL DET. WARN. PAVERS SHALL COMPLY WITH ADA REGULATIONS.

DETECTABLE WARNING PAVERS (4)
NOT TO SCALE

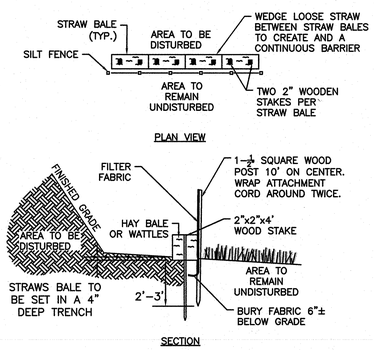

NOTE:
DEPTH TO BE 2' UNLESS POST IS TO BE SET IN PEAT THEN 3' OR GREATEST DEPTH POSSIBLE BY PUSHING BY HAND SHALL BE REQUIRED.

SILT FENCE AND HAY BALE DETAIL (5)
NOT TO SCALE

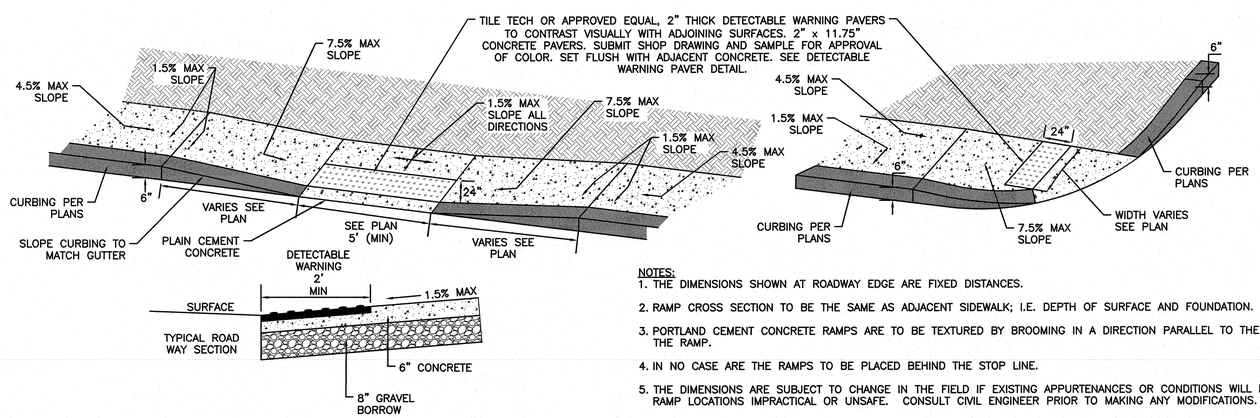

NOTES:

1. THE DIMENSIONS SHOWN AT ROADWAY EDGE ARE FIXED DISTANCES.
2. RAMP CROSS SECTION TO BE THE SAME AS ADJACENT SIDEWALK; I.E. DEPTH OF SURFACE AND FOUNDATION.
3. PORTLAND CEMENT CONCRETE RAMPS ARE TO BE TEXTURED BY BROOMING IN A DIRECTION PARALLEL TO THE LENGTH OF THE RAMP.
4. IN NO CASE ARE THE RAMPS TO BE PLACED BEHIND THE STOP LINE.
5. THE DIMENSIONS ARE SUBJECT TO CHANGE IN THE FIELD IF EXISTING APPURTENANCES OR CONDITIONS WILL MAKE THE RAMP LOCATIONS IMPRACTICAL OR UNSAFE. CONSULT CIVIL ENGINEER PRIOR TO MAKING ANY MODIFICATIONS.

ACCESSIBLE CURB CUT AND CURB TRANSITION (6)
NOT TO SCALE

N:\PROJECTS\3048-01\CIVIL\DRAWINGS\CURRENT\C-3048-01_DETAILS.DWG

APPROVED BY:
TOWN OF LEXINGTON PLANNING BOARD

DATE: _____

THIS PLAN IS SUBJECT TO A COVENANT

DATED _____

THIS PLAN IS SUBJECT TO A CERTIFICATE OF ACTION DATED _____

THIS PLAN IS SUBJECT TO A SPECIAL PERMIT

DATED _____

I _____ TOWN CLERK OF THE TOWN OF LEXINGTON, MASSACHUSETTS HEREBY CERTIFY THAT THE NOTICE OF APPROVAL OF THIS PLAN HAS BEEN RECEIVED AND RECORDED AT THIS OFFICE AND NO NOTICE OF APPEAL WAS RECEIVED DURING THE TWENTY DAYS NEXT AFTER SUCH RECEIPT AND RECORDING OF SAID NOTICE.

TOWN CLERK _____ DATE _____

COMMONWEALTH OF MASSACHUSETTS
CARLTON M. QUINN
CIVIL
No. 49923
REGISTERED PROFESSIONAL ENGINEER

5.19.22

PROFESSIONAL ENGINEER FOR
ALLEN & MAJOR ASSOCIATES, INC.

REV	DATE	DESCRIPTION

APPLICANT\OWNER:
131 HARTWELL LLC.
131 HARTWELL AVENUE
LEXINGTON, MA 02421

PROJECT:
DEFINITIVE NON-RESIDENTIAL SUBDIVISION
131 HARTWELL AVENUE
LEXINGTON, MA

PROJECT NO.	3048-01	DATE:	05-19-2022
SCALE:	AS SHOWN	DWG. NAME:	C-3048-01
DESIGNED BY:	SJL/CMQ	CHECKED BY:	CMQ

PREPARED BY:

ALLEN & MAJOR ASSOCIATES, INC.
civil engineering ◆ land surveying
environmental consulting ◆ landscape architecture
www.allenmajor.com
100 COMMERCE WAY, SUITE 5
WOBURN MA 01801-8501
TEL: (781) 935-6889
FAX: (781) 935-2896
WOBURN, MA ◆ LAKEVILLE, MA ◆ MANCHESTER, NH

THIS DRAWING HAS BEEN PREPARED IN DIGITAL FORMAT. CLIENT/CLIENT'S REPRESENTATIVE OR CONSULTANTS MAY BE PROVIDED COPIES OF DRAWINGS AND SPECIFICATIONS FOR HIS/HER INFORMATION AND/OR SPECIFIC USE ON THIS PROJECT. DUE TO THE POTENTIAL THAT THE PROVIDED INFORMATION MAY BE MODIFIED UNINTENTIONALLY OR OTHERWISE, ALLEN & MAJOR ASSOCIATES, INC. MAY REMOVE ALL INDICATION OF THE DOCUMENT'S AUTHORSHIP ON THE DIGITAL MEDIA. PRINTED REPRESENTATIONS OR PORTABLE DOCUMENT FORMAT OF THE DRAWINGS AND SPECIFICATIONS ISSUED SHALL BE THE ONLY RECORD COPIES OF ALLEN & MAJOR ASSOCIATES, INC.'S WORK PRODUCT.

DRAWING TITLE: DETAILS

SHEET No. C-504

Copyright©2021 Allen & Major Associates, Inc.
All Rights Reserved

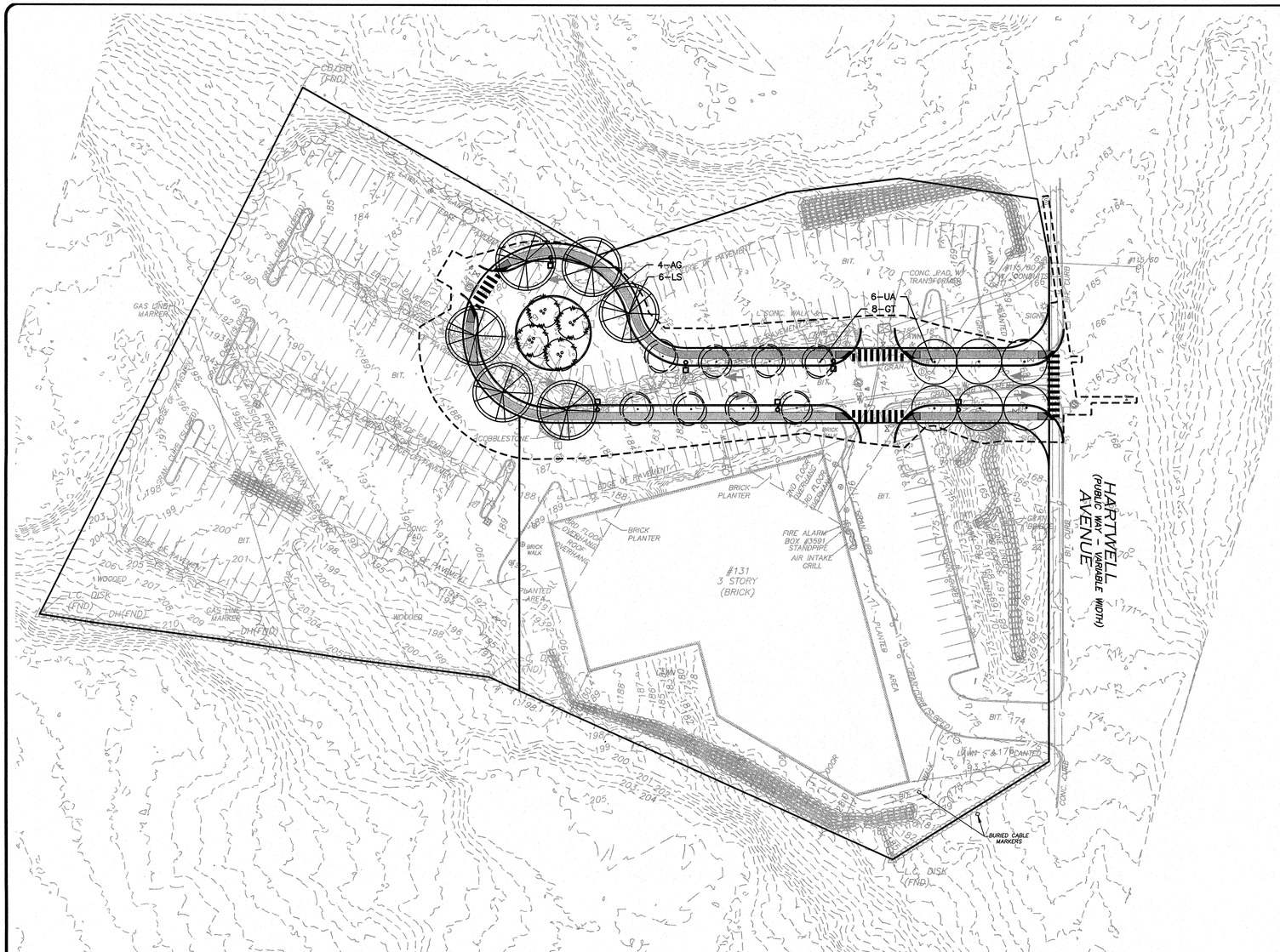

LEGEND

DECIDUOUS TREE

GENERAL NOTES

1. PROPERTY LINE AND EXISTING SITE CONDITIONS INFORMATION SHOWN HEREON IS TAKEN FROM A PLAN ENTITLED "ALTA/NSPS LAND TITLE SURVEY – 131 HARTWELL AVENUE IN LEXINGTON, MASSACHUSETTS (MIDDLESEX COUNTY)", DATED FEBRUARY 11, 2019, PREPARED BY BSC GROUP, PREPARED FOR PARSADA VENTURES, AND PROVIDED TO ALLEN & MAJOR ASSOCIATES BY AZAD LEGACY PARTNERS. THE INFORMATION SHOWN IS SUBJECT TO FIELD VERIFICATION AND MAY BE UPDATED AS NEEDED.
2. VERTICAL DATUM IS NAVD 88.
3. CONTOUR INTERVAL IS ONE FOOT (1').
4. CONTOURS SHOWN HEREON HAVE BEEN GENERATED FROM LIDAR DATA OBTAINED FROM THE NATIONAL OCEANIC AND ATMOSPHERIC ADMINISTRATION (NOAA).
5. THERE ARE NO WETLANDS ONSITE BASED UPON AVAILABLE MASS DEP GIS MAPS.
6. THE LOCATIONS OF EXISTING UNDERGROUND UTILITIES ARE SHOWN IN AN APPROXIMATE WAY ONLY AND HAVE NOT BEEN INDEPENDENTLY VERIFIED BY THE OWNER OR IT'S REPRESENTATIVE. THE CONTRACTOR SHALL DETERMINE THE EXACT LOCATION OF ALL EXISTING UTILITIES BEFORE COMMENCING WORK, AND AGREES TO BE FULLY RESPONSIBLE FOR ANY AND ALL DAMAGES WHICH MIGHT BE OCCASIONED BY THE CONTRACTOR'S FAILURE TO EXACTLY LOCATE AND PRESERVE ANY AND ALL UNDERGROUND UTILITIES.
7. THE INFORMATION SHOWN ON THIS PLAN IS THE SOLE PROPERTY OF ALLEN & MAJOR ASSOCIATES, INC. IT'S INTENDED USE IS TO PROVIDE INFORMATION. ANY ALTERATION, MISUSE, OR RECALCULATION OF INFORMATION OR DATA WITHOUT THE EXPRESSED, WRITTEN CONSENT OF ALLEN & MAJOR ASSOCIATES, INC. IS STRICTLY PROHIBITED.
8. THIS PLAN IS PRELIMINARY IN NATURE ONLY, IS SUBJECT TO CHANGE AND IS NOT FOR CONSTRUCTION.
9. CONTRACTOR SHALL BE RESPONSIBLE FOR VERIFYING INVERTS OF ALL AFFECTED DRAINAGE STRUCTURES IN THE FIELD.
10. SEE SHEET L-501 FOR NOTES AND DETAILS.

TOWN OF LEXINGTON ZONING SUMMARY - LANDSCAPE

REGULATION	ITEM	REQUIRED / ALLOWED	PROPOSED
SECTION 175-7.0	REQUIRED IMPROVEMENTS AND DESIGN STANDARDS		
7.6 B. (1)	TREES SHOULD BE PLANTED WITHIN THE RIGHT-OF-WAY'S PLANTING STRIP(S) AND SPACED BETWEEN 27 FEET AND 35 FEET APART ON CENTER.	27 FEET AND 35 FEET APART ON CENTER	35 FEET ON CENTER
7.6 B. (2) (b)	NO MORE THAN 50% OF ANY ONE GENUS MAY BE PROPOSED.	<50% OF ANY ONE GENUS	FOUR (4) SPECIES PROPOSED
7.6 B. (2) (d)	BE A MINIMUM SIZE OF THREE INCHES IN CALIPER, MEASURED FOUR FEET FROM THE GROUND LEVEL, AND EIGHT TO 10 FEET OF HEIGHT IN PLACE.	THREE INCHES IN CALIPER	3" CALIPER PROPOSED
7.6 C.	CUL-DE-SAC PLANTINGS. THE CENTER ISLAND OF A CUL-DE-SAC MUST BE LANDSCAPED.	LANDSCAPE CENTER CUL-DE-SAC.	LANDSCAPE CENTER CUL-DE-SAC.

PLANTING SCHEDULE

	KEY	QTY	BOTANICAL NAME	COMMON NAME	SIZE	SPACING	COMMENTS
DECIDUOUS SHADE AND FLOWERING TREES							
*	AG	4	AMELANCHIER X GRANDIFLORA 'AUTUMN BRILLIANCE'	AUTUMN BRILLIANCE SERVICEBERRY	10-12' HT.	AS SHOWN	B&B, MULTISTEM
*	GT	8	GLEDITSIA TRIACANTHOS V. INERMIS	HONEYLOCUST	3" CAL.	AS SHOWN	B&B
*	LS	6	LIQUIDAMBAR STYRACIFLUA	SWEET GUM	3" CAL.	AS SHOWN	B&B
*	UA	6	ULMUS AMERICANA 'PRINCETON'	PRINCETON AMERICAN ELM	3" CAL.	AS SHOWN	B&B
*	DENOTES NATIVE SPECIES						
	NOTE: ALL TREES TO MEET THOSE LISTED IN THE LEXINGTON 2019 TREE MANUAL						
		20	TREES REMOVED				
		0	TREES TO REMAIN				
		24	TREES PROPOSED				

DIG SAFE

BEFORE YOU DIG
CALL 811 OR
1-888-DIG-SAFE
1-888-344-7233

GRAPHIC SCALE

40 0 20 40 80 160

(IN FEET)
1 inch = 40 ft.

N:\PROJECTS\3048-01\CIVIL\DRAWINGS\CURRENT\L-3048-01_LANDSCAPE.DWG

APPROVED BY:
TOWN OF LEXINGTON PLANNING BOARD

DATE: _____

THIS PLAN IS SUBJECT TO A COVENANT DATED _____

THIS PLAN IS SUBJECT TO A CERTIFICATE OF ACTION DATED _____

THIS PLAN IS SUBJECT TO A SPECIAL PERMIT DATED _____

I _____, TOWN CLERK OF THE TOWN OF LEXINGTON, MASSACHUSETTS HEREBY CERTIFY THAT THE NOTICE OF APPROVAL OF THIS PLAN HAS BEEN RECEIVED AND RECORDED AT THIS OFFICE AND NO NOTICE OF APPEAL WAS RECEIVED DURING THE TWENTY DAYS NEXT AFTER SUCH RECEIPT AND RECORDING OF SAID NOTICE.

TOWN CLERK _____ DATE _____

PROFESSIONAL LANDSCAPE ARCHITECT FOR ALLEN & MAJOR ASSOCIATES, INC.

REV	DATE	DESCRIPTION

APPLICANT\OWNER:
131 HARTWELL LLC.
131 HARTWELL AVENUE
LEXINGTON, MA 02421

PROJECT:
DEFINITIVE NON-RESIDENTIAL SUBDIVISION
131 HARTWELL AVENUE
LEXINGTON, MA

PROJECT NO.	3048-01	DATE:	05-19-2022
SCALE:	1" = 40'	DWG. NAME:	L-3048-01
DESIGNED BY:	JBT	CHECKED BY:	CMQ

PREPARED BY:
ALLEN & MAJOR ASSOCIATES, INC.
civil engineering ◆ land surveying
environmental consulting ◆ landscape architecture
www.allenmajor.com
100 COMMERCE WAY, SUITE 5
WOBURN MA 01801-8501
TEL: (781) 935-6889
FAX: (781) 935-2896
WOBURN, MA ◆ LAKEVILLE, MA ◆ MANCHESTER, NH

THIS DRAWING HAS BEEN PREPARED IN DIGITAL FORMAT. CLIENT/CLIENT'S REPRESENTATIVE OR CONSULTANTS MAY BE PROVIDED COPIES OF DRAWINGS AND SPECIFICATIONS FOR HIS/HER INFORMATION AND/OR SPECIFIC USE ON THIS PROJECT. DUE TO THE POTENTIAL THAT THE PROVIDED INFORMATION MAY BE MODIFIED UNINTENTIONALLY OR OTHERWISE, ALLEN & MAJOR ASSOCIATES, INC. MAY REMOVE ALL INDICATION OF THE DOCUMENT'S AUTHORSHIP ON THE DIGITAL MEDIA. PRINTED REPRESENTATIONS OR PORTABLE DOCUMENT FORMAT OF THE DRAWINGS AND SPECIFICATIONS ISSUED SHALL BE THE ONLY RECORD COPIES OF ALLEN & MAJOR ASSOCIATES, INC.'S WORK PRODUCT.

DRAWING TITLE:
LANDSCAPE PLAN

SHEET No.
L-101

Copyright©2021 Allen & Major Associates, Inc.
All Rights Reserved

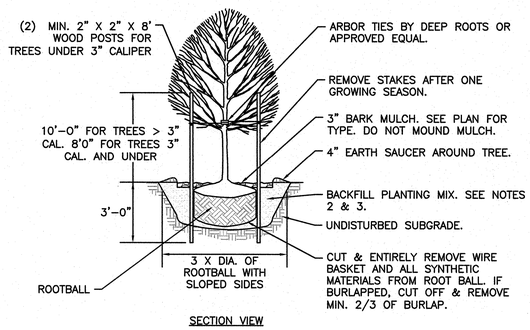

SECTION VIEW

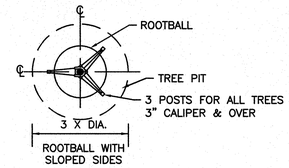

PLAN VIEW

NOTES:

1. ALL TREES SHALL HAVE THE SAME RELATIONSHIP TO FINISH GRADE AFTER PLANTING AS THEY HAD AT THE ORIGINAL NURSERY SETTING. ROOT FLARE SHALL BE 2" ABOVE FINISH GRADE. REMOVE SOIL FROM TRUNK FLARE OF TREE TO DETERMINE ACTUAL ROOTBALL AREA.
2. BACKFILL WITH PLANTING MIX. PLANT MIX TO BE: 50% NATIVE TOPSOIL, 20% BLENDED AND GROUND COMPOST (LEAVES & ORGANIC MATERIAL, NO ASH OR TOXIC MATERIALS) 20% PEAT MOSS, 10% SAND.
3. ADD MYCORRHIZA SOIL ADDITIVES AND SLOW RELEASE FERTILIZER WHEN PLANT HOLES ARE 50% FILLED AND WATER THOROUGHLY AT COMPLETION.

DECIDUOUS TREE
NOT TO SCALE
1

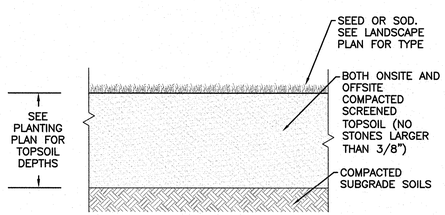

TEXTURE CLASS	% OF TOTAL WEIGHT
SAND	45% – 65%
SILT	15% – 35%
CLAY	5% – 20%

SIEVE	% PASSING
3/8"	100
NO. 4	85–100
NO. 40	60–85
NO. 100	38–60
NO. 200	28–40

NOTES:

1. TOP OF LOAM (TOPSOIL) IS FINISH GRADE.
2. ALL TOPSOIL (BOTH ONSITE AND OFFSITE SOURCES) SHALL BE COMPOSED OF A NATURAL, FERTILE, FRIABLE SOIL TYPICAL OF CULTIVATED TOPSOILS OF THE LOCALITY. SOIL SHALL BE SUITABLE FOR THE GERMINATION OF SEEDS AND SUPPORT OF VEGETATIVE GROWTH, WITH ADDITIVES, IF REQUIRED, TO ACHIEVE PARTICLE DISTRIBUTION AND ORGANIC CONTENT BELOW. TOPSOIL SHALL BE TAKEN FROM A WELL–DRAINED, ARIABLE SITE, FREE OF SUBSOIL, LARGE STONES, EARTH CLODS, STICKS, TRASH, STUMPS, CLAY LUMPS, ROOTS, OTHER OBJECTIONABLE, EXTRANEOUS MATTER OR DEBRIS NOR CONTAIN TOXIC SUBSTANCES.
3. THE CONTRACTOR SHALL PROVIDE THE OWNER / LANDSCAPE ARCHITECT WITH TOPSOIL TEST RESULTS (RECOMMEND UMASS AMHERST SOIL TESTING LAB) FOR APPROVAL PRIOR TO OBTAINING AND PLACING THE SOIL. IF THE PLANTING SOIL (BOTH ONSITE AND OFFSITE SOURCES) DOES NOT FALL WITHIN THE REQUIRED SIEVE ANALYSIS, TEXTURAL CLASS, ORGANIC CONTENT, OR PH RANGE, IT SHALL BE ADJUSTED TO MEET THE SPECIFICATIONS THROUGH THE ADDITION OF SAND, COMPOST, LIMESTONE, OR ALUMINUM SULFATE TO BRING IT WITHIN THE SPECIFIED LIMITS AT NO ADDITIONAL COST TO THE OWNER.
4. TOPSOIL SHALL HAVE A PH VALUE BETWEEN 5.5 AND 6.5. TOPSOIL SHALL CONTAIN BETWEEN 4% AND 8% ORGANIC MATTER OF TOTAL DRY WEIGHT AND SHALL CONFORM TO THE FOLLOWING GRADATION AND TEXTURE CLASS ABOVE.

TOPSOIL FOR LAWN & TREES
NOT TO SCALE
2

LANDSCAPE NOTES

1. ALL WORK SHALL BE IN ACCORDANCE WITH THE REQUIREMENTS OF THE TOWN OF LEXINGTON.
2. PLANTING PLAN IS DIAGRAMMATIC IN NATURE. FINAL PLACEMENT OF PLANTS TO BE APPROVED BY THE LANDSCAPE ARCHITECT IN THE FIELD.
3. THE CONTRACTOR SHALL BE RESPONSIBLE FOR CONTACTING ALL UTILITY COMPANIES, ANY PERMITTING AGENCIES, AND "DIG–SAFE" (1–888–344–7233) AT LEAST 72 HOURS IN ADVANCE OF ANY WORK THAT WILL REQUIRE EXCAVATION. CONTRACTOR SHALL NOTIFY THE OWNERS REPRESENTATIVE OF NAY CONFLICTS IN WRITING.
4. NO PLANT MATERIAL SHALL BE INSTALLED UNTIL ALL GRADING AND CONSTRUCTION HAS BEEN COMPLETED IN THE IMMEDIATE AREA.
5. ANY TREES NOTED AS "SEAL OR SELECTED SPECIMEN" SHALL BE TAGGED AND SEALED BY THE LANDSCAPE ARCHITECT.
6. ALL TREES SHALL BE BALLED AND BURLAPPED (B&B) UNLESS OTHERWISE NOTED OR APPROVED BY THE OWNER'S REPRESENTATIVE AND LANDSCAPE ARCHITECT.
7. CONTRACTOR SHALL VERIFY QUANTITIES SHOWN ON PLANT LIST. QUANTITIES SHOWN ON PLANS SHALL GOVERN OVER PLANT LIST.
8. ANY PROPOSED PLANT SUBSTITUTIONS MUST BE APPROVED IN WRITING BY OWNER'S REPRESENTATIVE AND LANDSCAPE ARCHITECT.
9. ALL PLANT MATERIALS INSTALLED SHALL MEET THE GUIDELINES ESTABLISHED BY THE AMERICAN STANDARD FOR NURSERY STOCK PUBLISHED BY AMERICANHORT (LATEST EDITION).
10. ALL PLANT MATERIALS SHALL BE GUARANTEED FOR ONE YEAR FOLLOWING DATE OF ACCEPTANCE.
11. ALL DISTURBED AREAS NOT OTHERWISE NOTED SHALL RECEIVE 6" OF SUITABLE LOAM & SEED. LAWNS WITH 3:1 OR GREATER SLOPES SHALL BE PROTECTED WITH AN EROSION CONTROL BLANKET.
12. ANY FALL TRANSPLANTING HAZARD PLANTS SHALL BE DUG IN THE SPRING AND STORED FOR FALL PLANTING.
13. TREES SHALL HAVE A MINIMUM CALIPER AS INDICATED ON THE PLANTING SCHEDULE TAKEN ONE FOOT ABOVE THE ROOT CROWN.
14. ALL PLANT BEDS AND TREE SAUCERS TO RECEIVE 3" OF PINE BARK MULCH. GROUNDCOVER AREAS SHALL RECEIVE 1" OF PINE BARK MULCH.
15. ALL DECIDUOUS TREES ADJACENT TO WALKWAYS AND ROADWAYS SHALL HAVE A BRANCHING PATTERN TO ALLOW FOR A MINIMUM OF 7' OF CLEARANCE BETWEEN THE GROUND AND THE LOWEST BRANCH.
16. ALL TREE STAKES SHALL BE STAINED DARK BROWN.
17. CONTRACTOR RESPONSIBLE FOR WATERING AND RESEEDING OF BARE SPOTS UNTIL A UNIFORM STAND OF VEGETATION IS ESTABLISHED AND ACCEPTED.
18. SOIL SAMPLES, TESTS, AND SHOP DRAWINGS SHALL BE PROVIDED TO THE LANDSCAPE ARCHITECT OR THE OWNER FOR APPROVAL PRIOR TO CONSTRUCTION.

LOAM AND SEED NOTES:

CONTRACTOR SHALL SEED ALL DISTURBED AREAS NOT NOTED TO RECEIVE OTHER MATERIALS, AND AT AREAS SHOWN ON THE PLAN PER SPECIFICATIONS BELOW

SCIENTIFIC NAME	COMMON NAME	PROPORTION BY WEIGHT	PERCENT PURITY	PERCENT GERMINATION
FESTUCA RUBRA "RUBRA"	CREEPING RED FESCUE	37%	95%	90%
PAO PRAENTENSIS "BARON"	BARON KENTUCKY BLUEGRASS	40%	85%	90%
LOLIUM PERENNE "PALMER"	PALMER PERENNIAL RYEGRASS	15%	95%	90%
FESTUCA RUBRA COMMUTATA WILMA	WILMA CHEWINGS	8%	95%	80%

1. SEED TO BE SPREAD AT MINIMUM RATE OF 5 LBS. PER 1000 SQ. FT.
2. SEEDING TO BE COMPLETED "IN SEASON" BETWEEN APRIL 1 TO JUNE 15 OR AUGUST 15 TO OCTOBER 1, EXCEPT FOR RESEEDING OF BARE SPOTS. IF UNABLE TO SEED WITHIN THESE TIMEFRAMES, CONTRACTOR TO INSTALL EROSION CONTROL MATS ON ALL SLOPES 3:1 AND OVER, HYDROSEED ALL EXPOSED AREAS, ADD SOIL STABILIZER "FLUX TERRA HP–FGM SOIL STABILIZER" AS MANUFACTURED BY "PROFILE" TO HYDROSEED (AT RATE OF 3,000 LBS PER ACRE). CONTRACTOR TO COMPLETE ALL ABOVE "OUT OF SEASON" REQUIREMENTS AND THEN ALSO BE RESPONSIBLE FOR RE–GRADING AND RE–SEEDING ALL DISTURBED, ERODED, OR BARE SPOTS WITHIN NEXT CLOSEST PLANTING SEASON IN FALL OR SPRING.
3. COMMERCIAL FERTILIZER SHALL BE APPLIED AT THE RATE OF 25 POUNDS PER 1000 SQ. FT. OR AS RECOMMENDED BY THE TESTING AGENCY. LIME TO BE SPREAD AT THE RATE OF 100 POUNDS PER 1000 SQ. FT OR AS RECOMMENDED BY THE TESTING AGENCY. COMMERCIAL FERTILIZER SHALL BE A COMPLETE FERTILIZER CONTAINING AT LEAST 50% OF THE NITROGEN OF WHICH IS DERIVED FROM NATURAL ORGANIZE SOURCES OF UREAFORM. IT SHALL CONTAIN THE FOLLOWING PERCENTAGES BY WEIGHT: NITROGEN (N) 10%, PHOSPHORUS (P) 6%, POTASH (K) 4%. LIME SHALL BE AN APPROVED AGRICULTURAL LIMESTONE CONTAINING NOT LESS THAN 85% OF TOTAL CARBONATES. LIMESTONE SHALL BE GROUND TO SUCH FINENESS THAT 50% WILL PASS A 100 MESH SIEVE AND 90% WILL PASS THROUGH A 20 MESH SIEVE.
4. LAWN AREAS TO BE SEEDED BY SOWING EVENLY WITH AN APPROVED MECHANICAL SEEDER AT THE RATE OF TEN POUNDS PER 1000 SQUARE FEET.
5. CONTRACTOR RESPONSIBLE FOR WATERING, MOWING, AND RESEEDING OF LAWN BARE SPOTS UNTIL A UNIFORM, HEALTHY STAND OF GRASS IS ESTABLISHED AND ACCEPTED.

GENERAL NOTES

1. PROPERTY LINE AND EXISTING SITE CONDITIONS INFORMATION SHOWN HEREON IS TAKEN FROM A PLAN ENTITLED "ALTA/NSPS LAND TITLE SURVEY – 131 HARTWELL AVENUE IN LEXINGTON, MASSACHUSETTS (MIDDLESEX COUNTY)", DATED FEBRUARY 11, 2019, PREPARED BY BSC GROUP, PREPARED FOR PARSADA VENTURES, AND PROVIDED TO ALLEN & MAJOR ASSOCIATES BY AZAD LEGACY PARTNERS. THE INFORMATION SHOWN IS SUBJECT TO FIELD VERIFICATION AND MAY BE UPDATED AS NEEDED.
2. VERTICAL DATUM IS NAVD 88.
3. CONTOUR INTERVAL IS ONE FOOT (1').
4. CONTOURS SHOWN HEREON HAVE BEEN GENERATED FROM LIDAR DATA OBTAINED FROM THE NATIONAL OCEANIC AND ATMOSPHERIC ADMINISTRATION (NOAA).
5. THERE ARE NO WETLANDS ONSITE BASED UPON AVAILABLE MASS DEP GIS MAPS.
6. THE LOCATIONS OF EXISTING UNDERGROUND UTILITIES ARE SHOWN IN AN APPROXIMATE WAY ONLY AND HAVE NOT BEEN INDEPENDENTLY VERIFIED BY THE OWNER OR IT'S REPRESENTATIVE. THE CONTRACTOR SHALL DETERMINE THE EXACT LOCATION OF ALL EXISTING UTILITIES BEFORE COMMENCING WORK, AND AGREES TO BE FULLY RESPONSIBLE FOR ANY AND ALL DAMAGES WHICH MIGHT BE OCCASIONED BY THE CONTRACTOR'S FAILURE TO EXACTLY LOCATE AND PRESERVE ANY AND ALL UNDERGROUND UTILITIES.
7. THE INFORMATION SHOWN ON THIS PLAN IS THE SOLE PROPERTY OF ALLEN & MAJOR ASSOCIATES, INC. IT'S INTENDED USE IS TO PROVIDE INFORMATION. ANY ALTERATION, MISUSE, OR RECALCULATION OF INFORMATION OR DATA WITHOUT THE EXPRESSED, WRITTEN CONSENT OF ALLEN & MAJOR ASSOCIATES, INC. IS STRICTLY PROHIBITED.
8. THIS PLAN IS PRELIMINARY IN NATURE ONLY, IS SUBJECT TO CHANGE AND IS NOT FOR CONSTRUCTION.
9. CONTRACTOR SHALL BE RESPONSIBLE FOR VERIFYING INVERTS OF ALL AFFECTED DRAINAGE STRUCTURES IN THE FIELD.

N:\PROJECTS\3048–01\CIVIL\DRAWINGS\CURRENT\L–3048–01_LANDSCAPE.DWG

APPROVED BY:
TOWN OF LEXINGTON PLANNING BOARD

DATE: _____

THIS PLAN IS SUBJECT TO A COVENANT

DATED _____

THIS PLAN IS SUBJECT TO A CERTIFICATE OF

ACTION DATED _____

THIS PLAN IS SUBJECT TO A SPECIAL PERMIT

DATED _____

I _____, TOWN CLERK OF THE TOWN OF LEXINGTON, MASSACHUSETTS HEREBY CERTIFY THAT THE NOTICE OF APPROVAL OF THIS PLAN HAS BEEN RECEIVED AND RECORDED AT THIS OFFICE AND NO NOTICE OF APPEAL WAS RECEIVED DURING THE TWENTY DAYS NEXT AFTER SUCH RECEIPT AND RECORDING OF SAID NOTICE.

TOWN CLERK _____ DATE _____

PROFESSIONAL LANDSCAPE ARCHITECT FOR ALLEN & MAJOR ASSOCIATES, INC.

REV	DATE	DESCRIPTION

APPLICANT\OWNER:
131 HARTWELL LLC.
131 HARTWELL AVENUE
LEXINGTON, MA 02421

PROJECT:
DEFINITIVE NON-RESIDENTIAL SUBDIVISION
131 HARTWELL AVENUE
LEXINGTON, MA

PROJECT NO.	3048-01	DATE:	05-19-2022
SCALE:	AS SHOWN	DWG. NAME:	L-3048-01
DESIGNED BY:	JBT	CHECKED BY:	CMQ

PREPARED BY:

ALLEN & MAJOR ASSOCIATES, INC.
civil engineering ◆ land surveying
environmental consulting ◆ landscape architecture
www.allenmajor.com
100 COMMERCE WAY, SUITE 5
WOBURN MA 01801-8501
TEL: (781) 935-6889
FAX: (781) 935-2896

WOBURN, MA ◆ LAKEVILLE, MA ◆ MANCHESTER, NH

THIS DRAWING HAS BEEN PREPARED IN DIGITAL FORMAT. CLIENT/CLIENT'S REPRESENTATIVE OR CONSULTANTS MAY BE PROVIDED COPIES OF DRAWINGS AND SPECIFICATIONS FOR HIS/HER INFORMATION AND/OR SPECIFIC USE ON THIS PROJECT. DUE TO THE POTENTIAL THAT THE PROVIDED INFORMATION MAY BE MODIFIED UNINTENTIONALLY OR OTHERWISE, ALLEN & MAJOR ASSOCIATES, INC. MAY REMOVE ALL INDICATION OF THE DOCUMENTS AUTHORSHIP ON THE DIGITAL MEDIA. PRINTED REPRESENTATIONS OR PORTABLE DOCUMENT FORMAT OF THE DRAWINGS AND SPECIFICATIONS ISSUED SHALL BE THE ONLY RECORD COPIES OF ALLEN & MAJOR ASSOCIATES, INC.'S WORK PRODUCT.

DRAWING TITLE:
LANDSCAPE DETAILS

SHEET No.
L-501

Copyright©2021 Allen & Major Associates, Inc.
All Rights Reserved

(Space above this Line Reserved for Registry of Deeds)

COVENANT

Let it be known that 131 Hartwell LLC, of Lexington, Middlesex County, Massachusetts, owner in fee simple of Lot 6A, Assessors Map 74, Lexington, Middlesex County, Massachusetts, (the "Applicant") has submitted an application to the Lexington Planning Board on May 19, 2022, for approval of a plan entitled, "Plans for Definitive Non-Residential Subdivision of Land, 131 Hartwell Avenue" dated May 19, 2022 revised through July 12, 2022 consisting of elevan sheets.

In consideration of the Lexington Planning Board approving said plan without requiring a performance bond or other surety, and in consideration of one dollar in hand paid, receipt whereof is hereby acknowledged, the Applicant covenants .and agrees with the Town as follows:

1. That no lot may be built upon or conveyed until the construction of ways and the installation of municipal services have been provided to serve Lots on said Plan in accordance with any covenants, conditions, agreements, terms, and conditions specified in the following:
   a. The Application for Approval, datedMay 9, 2022 as qualified by the definitive subdivision plan.
   b. The Planning Board's Development Regulations and Subdivision Regulations Chapter 175 of the Code of Lexington governing this development.
   c. The Planning Board's Certificate of Vote Decision dated July 13, 2022 and any conditions of approval specified therein, granted by the Board onJuly 13, 2022 and submitted to the Town Clerk on July 18, 2022.
   d. Other document(s) specifying construction to be completed, namely:
      i. N/A

   It is understood and agreed that lots within the development shall, respectively, be released from the foregoing conditions only upon the recording of a written release executed by a majority of the Board specifically enumerating the lots to be released.

This covenant shall be binding upon and inure to the benefit of the executors, administrators, devisees, heirs, successors and assigns of the Applicant. It is the intention of the undersigned and it is hereby understood and agreed that this contract

DRAFT

shall constitute a covenant running with the land included in the aforesaid development and shall operate as a restriction upon said land.

DRAFT

2. Nothing herein shall be deemed to prohibit conveyance by a single deed of either the entire parcel shown on the plan or of all lots not previously released by the Board. Notwithstanding any provision herein to the contrary, a mortgagee who acquires title to the mortgaged premises, or part thereof, by foreclosure or otherwise may sell any lot subject to the terms and conditions of this covenant.

3. The undersigned warrants and represents that it is the owner in fee simple of all the land included in the development, and there are no mortgages or liens of recordor otherwise on any of said land, except those described below and subordinated to this Covenant, and the present holders of said mortgages or liens have assented to this Covenant prior to its execution by the Applicant.

   The description of the mortgage(s) and lien(s) is as follows:

   Mortgage, Security Agreement and Financing Statement by 131 Hartwell LLC to Cambridge Trust Company dated February 15, 2019 and recorded with the Middlesex South Registry of Deeds District of the Land Court as Document No. 01807530, Book: 1540 Page: 180, Certificate No. 269840;

   Assignment of Lease and Rents by and between Cambridge Trust Company and 131 Hartwell Avenue LLC dated February 15, 2019 and recorded with the Middlesex South Registry of Deeds District of the Land Court as Document No. 01807531, Book: 1540 Page: 180, Certificate No. 269840.

   The mortgagee agrees to hold the mortgage subject to the covenants set forth herein and agrees that the covenants shall have the same status, force and effect as though executed and recorded before the taking of the mortgage and further agrees that the mortgage shall be subordinate to this covenant.

   The lien holder agrees to hold the lien subject to the covenants set forth herein and agrees that the covenants shall have the same status, force and effect as though executed and recorded before the taking of the lien and further agrees that the lien shall be subordinate to this covenant.

4. This covenant shall take effect upon the endorsement of said plan and shall promptlybe recorded with the Middlesex South Registry of Deeds by the Applicant with the appropriate marginal reference to this covenant placed on the plan.

5. Upon final completion of the construction of ways and installation of municipal services as specified herein, on or before August 17, 2024, the Board shall release this covenant
   by an appropriate instrument duly recorded. Failure to complete construction and installation within the time specified herein, or such later date as may be specified by vote of the Board with a written concurrence by the applicant, shall result in the automatic rescission of the approval of the plan.

6. Title references for the premises are as follows:

   Deed to 131 Hartwell LLC, dated February 15, 2019 and recorded with the Middlesex South Registry of Deeds District of the Land Court as Document No. 01807528, Book: 1540 Page: 180, Certificate No. 269840;

7. The undersigned is duly authorized on behalf of the Applicant to execute this

DRAFT

document pursuant to a Certificate of Good Standing issued by the Secretary of the State for the Commonwealth of Massachusetts to be recorded herewith.

8. This covenant can be executed in counterparts which when taken together shall constitute one instrument.

DRAFT

Executed under seal as of the_____day of_____, 2022

Signature of Applicant

Applicant's Name Printed
Charles P. Minasian, Authorized Signatory for
131 Hartwell LLC

Signature of Authorized Lender's Representative
Cambridge Trust Company

Lender's Representative's Name Printed

Signature of Planning Board Member

Board Member's Name Printed

Signature of Planning Board Member

Board Member's Name Printed

Signature of Planning Board Member

Board Member's Name Printed

Signature of Planning Board Member

Board Member's Name Printed

Signature of Planning Board Member

Board Member's Name Printed

Signatures of a Majority of the Members of the
Planning Board of the Town of Lexington

DRAFT

COMMONWEALTH OF MASSACHUSETTS

MIDDLESEX COUNTY, ss

On this ____ day of_____20___ , before me, the undersigned notary public,

personally appeared the Charles P. Minasian, Authorized Signatory of 131 Hartwell Avenue LLC, proved to me through satisfactory evidence of identification, which were _____to be the person whose name is signed on the proceeding or attached document, and acknowledged tome that he signed it voluntarily for its stated purpose in the aforesaid capacity as the voluntary act of 131 Hartwell LLC.

_____

Notary Public:
My Commission Expires:

MIDDLESEX COUNTY, ss

On this ____ day of_____2022 , before me, the undersigned notary public,

personally appeared the _____, _____ of CAMBRIDGE TRUST COMPANY, proved to me through satisfactory evidence of identification, which were _____to be the person whose name is signed on the proceeding or attached document, and acknowledged to me that he signed it voluntarily for its stated purpose in the aforesaid capacity as the voluntary act of Cambridge Trust Company.

_____

Notary Public:
My Commission Expires:

DRAFT

COMMONWEALTH OF MASSACHUSETTS

MIDDLESEX COUNTY, ss

On this ____ day of_____20___ , before me, the undersigned notary public,

personally appeared the Lexington Planning Board member Robert D. Peters proved to me through satisfactory evidence of identification, which were_____to be the persons whose names are signed on the proceeding or attached document, and aclmowledged to me that (he) (she}signed it voluntarily for its stated purpose.

_____
Abigail McCabe, Notary Public
My Commission Expires _ _ _ _

DRAFT

COMMONWEALTH OF MASSACHUSETTS

MIDDLESEX COUNTY, ss

On this ____ day of_____20___ , before me, the undersigned notary public,

personally appeared the Lexington Planning Board member Charles Hornig proved to me through satisfactory evidence of identification, which were_____to be the persons whose names are signed on the proceeding or attached document, and aclmowledged to me that (he) (she}signed it voluntarily for its stated purpose.

_____

Abigail McCabe, Notary Public
My Commission Expires _ _ _ _

DRAFT

COMMONWEALTH OF MASSACHUSETTS

MIDDLESEX COUNTY, ss

On this ____ day of_____20___ , before me, the undersigned notary public,

personally appeared the Lexington Planning Board member Melanie Thompson proved to me through satisfactory evidence of identification, which were_____to be the persons whose names are signed on the proceeding or attached document, and aclmowledged to me that (he) (she}signed it voluntarily for its stated purpose.

_____

Abigail McCabe, Notary Public
My Commission Expires _ _ _ _

DRAFT

COMMONWEALTH OF MASSACHUSETTS

MIDDLESEX COUNTY, ss

On this ____ day of_____20___ , before me, the undersigned notary public,

personally appeared the Lexington Planning Board member Michael Schanbacher proved to me through satisfactory evidence of identification, which were_____to be the persons whose names are signed on the proceeding or attached document, and aclmowledged to me that (he) (she}signed it voluntarily for its stated purpose.

_____

Abigail McCabe, Notary Public
My Commission Expires _ _ _ _

DRAFT

COMMONWEALTH OF MASSACHUSETTS

MIDDLESEX COUNTY, ss

On this ____ day of_____20___ , before me, the undersigned notary public,

personally appeared the Lexington Planning Board member Robert Creech proved to me through satisfactory evidence of identification, which were_____to be the persons whose names are signed on the proceeding or attached document, and aclmowledged to me that (he) (she}signed it voluntarily for its stated purpose.

_____

Abigail McCabe, Notary Public
My Commission Expires _ _ _ _

DRAFT

AGENDA ITEM SUMMARY

LEXINGTON PLANNING BOARD

AGENDA ITEM TITLE:

12-18, 24 Hartwell Ave. - Acceptance of performance guarantee and endorse Definitive Subdivision Plan for subdivision approved on June 29, 2022

PRESENTER:

Staff and Applicant: 12-18 Hartwell Owner LLC

ITEM NUMBER:

SUMMARY:

12-18, 24 Hartwell Ave. - Acceptance of performance guarantee and endorse Definitive Subdivision Plan for subdivision approved on June 29, 2022. The 20-day appeal period has ended without an appeal. Board will review covenant and be asked to accept and sign the approved plan.
Staff sees no issues and recommends approval.

SUGGESTED MOTION:

Move to accept the submitted covenant for the definitive subdivision at 12-18, 24 Hartwell Avenue and sign the Plan.

(board will need to sign plan and covenant at the office to be notarized)

FOLLOW-UP:

DATE AND APPROXIMATE TIME ON AGENDA:

8/17/2022

ATTACHMENTS:

Description	Type
Decision	Exhibit
Approved Plans	Exhibit

Draft Covenant Exhibit

RECEIVED

2022 11 Jul, 10:07 am

TOWN CLERK

LEXINGTON MA

Town of Lexington
PLANNING BOARD
1625 Massachusetts Avenue
Lexington, MA 02420
Tel (781) 698-4560
planning@lexingtonma.gov
www.lexingtonma.gov/planning

Robert D. Peters, Chair
Michael Schanbacher, Vice Chair
Melanie Thompson, Clerk
Robert Creech, Member
Charles Hornig, Member
Michael Leon, Associate Member

DECISION OF THE LEXINGTON PLANNING BOARD
DEFINITIVE SUBDIVISION

CERTIFICATE OF VOTE
12-18 & 24 Hartwell Avenue
(Assessor's Map 84, Lots 70C & 70E)

Date of Application: May 19, 2022
Date of Public Hearing: June 29, 2022
Date of Vote: June 29, 2022

DECISION

This is to certify that the Lexington Planning Board, acting within the provisions of M.G.L., Chapter 41, § 81U, at a meeting on June 29, 2022, by a vote of five (5) members in favor and none (0) opposed, voted to conditionally approve the Definitive Subdivision plan for a three (3) lot subdivision named at 12-18 & 24 Hartwell Avenue as shown on the plans entitled "Definitive Subdivision Plans, 12-18 & 24 Hartwell Avenue, Lexington, MA", dated May 18, 2022, prepared by Allen & Major Associates, INC., consisting of 15 sheets including the cover page, filed with the Planning Office on May 19, 2022; subject to the terms and conditions of approval and the covenant to be given in said Section 81U and subject to the following terms and conditions imposed by the Lexington Planning Board.

PROJECT SUMMARY AND BACKGROUND

Application proposes three lots on a subdivision cul-de-sac with a 24 ft. wide drive, landscaped center island, sidewalk, street trees, and a subsurface infiltration stormwater management system. Presently the 11.5-acre properties contain two one-story office buildings, and off-street surface parking.

A preliminary subdivision application was approved by the Planning Board on October 20, 2021.

STATEMENT OF FINDINGS

After having reviewed all the plans and reports filed by the Applicant and its representatives, and having considered the technical analysis, supplemental information provided during the course of the public hearing, correspondence and testimony from representatives from various boards, commissions, departments within Lexington, members of the public, and from all other interested parties, the Lexington Planning Board makes the following procedural findings and project findings:

RECEIVED

2022 11 Jul, 10:07 am

TOWN CLERK

LEXINGTON MA

Procedural Findings:

1. On May 19, 2022, an application was filed by or on behalf of Greatland Realty Partners (hereinafter referred to as the "Applicant") with the Lexington Planning Board through the View Point Cloud Permit system PLAN-22-6 (hereinafter "Application") pursuant to M.G.L. Chapter 41, Section 81, and the Rules and Regulations Governing the Subdivision of Land in Lexington, Chapter 175, last revised on August 30, 2017.

2. Pursuant to M.G.L. Chapter 41, Sections 81K through 81G (hereinafter "Subdivision Control Law"), and the applicable provisions of the Rules and Regulations, the Planning Board caused notice of the public hearing to be published in the Lexington Minuteman, a newspaper of general circulation in Lexington, on June 9, 2022 and again on June 16, 2022. Notice of the public hearing was posted in the Lexington office of the Town Clerk on May 31, 2022 and continuing through the opening of the public hearing on June 29, 2022. Said notice of the public hearing was mailed postage prepaid to the applicant, property owner, and all abutters as prescribed in the Subdivision Control Law on May 31, 2022.

3. The Planning Board provided copies of the Application to other Lexington departments and officials, including, but not limited to, the Health Director/Assistant Director, Building Commissioner, Conservation Director, Assistant Town Engineer, Police Chief, Assistant Fire Chief, and Zoning Administrator.

4. The Board of Health filed their report to approve with no concerns on the Definitive Subdivision on June 21, 2022, pursuant to M.G.L. Chapter 41, Section 81U.

5. After notice and publication was provided pursuant to the applicable provisions of the Subdivision Control Law and the Board's Rules and Regulations, the public hearing on the Application commenced on June 29, 2022, on which date the Planning Board closed the public hearing. All Planning Board meetings and the public hearings were held remotely via Zoom, pursuant to c. 20 of the Acts of 2021 and c. 22 of the Acts of 2022 further extending the remote provisions until July 15, 2022. The Planning Board accepted public comments via Zoom.

6. Lexington Planning Board members Robert Peters, Michael Schanbacher, Melanie Thompson, Robert Creech, and Charles Hornig were present for all public hearings at which testimony was taken.

Project Findings:

1. The subject property consists of one 11.5-acre parcel of land shown on the Lexington Assessors' Map as 84, Lots 70C & 70E and located in the CM (Commercial Manufacturing) zoning district.

2. The Applicant proposes to divide the existing lot into three (3) lots on a subdivision cul-de-sac with a 24ft. wide drive, landscaped center island, sidewalks, street trees, and a subsurface infiltration stormwater management system. The existing buildings and parking areas are to be removed.

3. On September 29, 2021, the Applicant filed a Preliminary Subdivision application with the Town Clerk. The Lexington Planning Board voted to approve the Preliminary Subdivision with conditions on October 20, 2021, and issued a Preliminary approval on October 22, 2021. Once endorsed by the Planning Board, the land shown on this definitive subdivision plan can be governed by the zoning

RECEIVED
2022 11 Jul, 10:08 am
TOWN CLERK
LEXINGTON MA

bylaw in effect on September 29, 2021 for eight years from the date of endorsement of this definitive plan.

4. The Development, as modified by the conditions of this decision, will not present a public safety hazard to the town, or the surrounding properties.

WAIVERS

The Planning Board may waive any of its Rules and Regulations if the Board finds the waiver is in the public interest and not inconsistent with the intent and purpose of the Subdivision Control Law. On June 29, 2022, the Board voted to waive the strict requirements of §175-6.1D [Definitive Subdivision Plan Information Required] subject to the conditions of approval. The Board finds the waivers are not inconsistent with the intent and purpose of the Subdivision Control Law.

1. The Applicant requested a waiver for §175-6.1D(2) of the Town Code for Soil Surveys, Test Pits, and Test Borings. The Applicant requests the required test pits and test borings be provided as a condition of approval.

2. The Applicant also requested a waiver for §175-6.1D(11)(b) of the Town Code for an agreement allocating the responsibility for costs and maintenance among owners. The Applicant requested the required agreement be provided as a condition of approval.

CONDITIONS

After the public hearing, the Lexington Planning Board by a vote of five (5) in favor and none (0) opposed, voted to approve the Definitive Subdivision for 12-18 & 24 Hartwell Avenue as described above, subject to the following conditions:

<u>Prior to Plan Endorsement</u>:

1. Prior to endorsement of the Definitive Plan, the Applicant shall provide a Performance Guarantee, in a manner acceptable to the Planning Board, and prior to the release of any lot or the issuance of any building permits for the construction of any buildings, to insure the required improvements related to the construction of the road and services will be constructed and installed in accordance with the approved Definitive Plan.

2. After notice from the Town Clerk of "No Appeal", the Applicant shall submit the final revised Definitive Subdivision Plan set including the Property Rights and Dimensional Standards Plan and the Street Layout and Profile Plan sheets, for endorsement by the Planning Board within 180 days of this approval in accordance with this Certificate of Vote. The Applicant shall record with the Registry and notify the Board in writing of the date, book, and page or document of the recording information. Failure to do so may result in recission of this Decision.

3. Following endorsement and prior to commencing any site work or construction related to this approval, the certificate of vote and any easements (including utility easements) and covenants must be recorded at the Registry with proof of recording the Definitive Subdivision Plan at the South Middlesex Country Registry of Deeds shall be submitted to the Lexington Planning Department.

RECEIVED

2022 11 Jul, 10:08 am

TOWN CLERK

LEXINGTON MA

4. All easement documents shall be provided to the Planning Board, staff, and Town Counsel for review and approval prior to recording at the Registry.

General Provisions Prior to Any Site Work and Construction:

5. If the Project, or any condition imposed by this decision, requires a permit, license, or other approval from any other board, committee or agency of Lexington or other regulatory agency of the Commonwealth or the Federal government, the Applicant is responsible for filing the appropriate application. As proposed, Applicant is responsible for any required application with the Conservation Commission and a Stormwater Permit under the Stormwater Bylaw. If any condition of such permit is inconsistent with or modifies the approved Project Plans the Applicant shall make application to the Planning Board for amendment of this Decision, and the Planning Board shall consider such application in accordance with the requirements of M.G.L. Chapter 41, §81T & §81W and all applicable Planning Board Subdivision Regulations.

6. Applicant shall provide to the Planning Department an agreement allocating responsibility for and costs of maintenance amount owners per §175-6.1D(11)(b) prior to issuance of building permits.

7. Applicant shall provide to the Planning Department an agreement allocating the responsibility for and costs of maintenance amount the owners pursuant to § 175.6.1D(11)(b).

During Construction:

8. Project related construction shall comply with the current Lexington's General Bylaws Chapter 80 [Noise Control], for construction related activities with hours limited to 7:00 a.m. and 5:00 p.m. Monday through Friday and between 9:00 am and 5:00 pm on Saturdays. Operation is not permitted on Sundays and legal holidays.

9. The Department of Public Works shall be notified at least forty-eight hours in advance of any roadway, municipal service, and backfill of any underground utilities for inspections or utility connections.

10. Applicant shall perform daily clean up of construction debris, including soil on municipal streets within two-hundred yards from the entrance of the site drive caused by construction related to the project.

11. Construction and land disturbance activities, soil erosion and sedimentation to wetlands or resources areas shall be minimized by an active program meeting the requirements of the Lexington Conservation Commission, Department of Environmental Protection Best Management Practices, and the Stormwater Management Permit.

12. Applicant shall provide appropriate erosion control methods such as silt fences and straw wattles and organic hessian fabric burlap filled with compost and the stockpiles in case of a storm event, in addition to dust control requirements.

RECEIVED
2022 11 Jul, 10:09 am
TOWN CLERK
LEXINGTON MA

13. The Applicant is responsible for promptly repairing any damage caused to street pavement, signs, or other fixtures or features within the public right-of-way, after obtaining permission from the Department of Public Works. Such repairs shall be performed to Lexington Standards.

14. A copy of this Decision and the Project Plans shall be kept on the Project Site in a highly visible location at all times during construction.

Continuing Conditions:

15. Except as modified by the conditions and findings hereof, the Project shall comply with the final revised approved Definitive Plan Set, in all respects, and the Applicant shall pursue completion of the project with reasonable diligence and continuity. The subdivision and its construction shall comply in all respects to the Subdivision Rules and Regulations unless specifically waived by a vote of the Planning Board and recorded in writing.

16. This approval is limited to a total of three (3) lots, regardless of the number of lots which could otherwise be developed and the road may not be extended without returning to the Planning Board for an amendment or modification pursuant to M.G.L. Chapter 41, § 81W. Further division of any lot created hereon, whether by ANR or any other method, is expressly prohibited, except that lots may be reconfigured, such that the total number of lots does not exceed three (3) lots. Any change in roadway or increase in number of lots requires a new subdivision filing, pursuant to §81T & §81W.

17. The Town is not responsible for non-emergency municipal services provided along the new road, including snow removal and recycling/trash service, unless street acceptance by Town Meeting.

18. Planning staff and members of the Planning Board and its agents shall be permitted access to the Project Site during construction with proper notification to the Applicant (and subject to any construction safety requirements), and shall have the right to gather all information, measurements, photographs or other materials needed to ensure compliance with the terms of this Decision, subject to applicable safety requirements.

19. A final as-built plan shall be submitted to the Planning Office, Engineering, and Building Commissioner prior to issuance of the Completion Certificate or release of the Performance Guarantee. The as-built plan shall be prepared and certified by a professional engineer and submitted as a PDF and CAD file. The "As Built" Plan shall indicate the stormwater system, parking, driveways, sidewalks and walkways, utilities, any lighting, storm drains, water mains and their appurtenances, etc. in material compliance with the approved project plans.

20. Any future change, modification or amendment to the final Definitive Plan as may be approved by the Planning Board shall be in accordance with the requirements of M.G.L. Chapter 41, § 81T & §81W and § 6.7 of the Board's Subdivision Regulations. No material alterations, or any changes shall be made in any plans, proposals or supporting documents, or site work without prior written approval from the Planning Board or their designee. Any request for a modification of this approval shall be made in writing the Planning Department for review and approval by the Planning Board and shall include a description of the proposed modification, reasons the modification is necessary, and any supporting documentation. Upon receipt of a request, the Planning Department may, in the first instance, authorize a minor modification to the site plans, or Planning staff may refer the matter

RECEIVED
2022 11 Jul, 10:09 am
TOWN CLERK
LEXINGTON MA

to the Planning Board, which may consider and approve minor modifications at a regularly scheduled Planning Board meeting duly noticed. In the event the Board determines the change is major in nature (resulting in material changes such as newly impacted parcels), the Board shall consider the modification at a properly noticed public hearing.

21. The Applicant must complete construction of all ways and services within two (2) years of the date of Planning Board endorsement of the definitive plan. Failure to do so may result in the rescission of the approval of such plan, unless the Board extends said period, for good cause shown, after the written request of the Applicant not less than 20 days before the expiration of said period.

22. Construct Streets and All Required Utilities. As a condition of approval of a subdivision, the applicant agrees to construct streets and complete all other work specified on the definitive plan or required under these Regulations, meet all relevant provisions of the Zoning Bylaw and other bylaws, including installation of required utilities in such subdivision, and all work incidental to them, such as grading of lots to provide drainage, construction of retaining walls and other details or as specifically required by the Board.

23. Applicant/owner is responsible for maintaining the landscaping, streets, and utilities within the subdivision until formally accepted by the Town. The owner must provide a supplemental covenant agreeing to maintain the streets and utilities, including snow removal, and permitting the Town to maintain them if necessary at the expense of the owners. Any trees and landscaping that does not survive must be replaced in-kind within the first available growing season.

24. Perpetual Rights and Easements.

    a. As a condition of approval of a subdivision, the owner must grant to the Town a right and easement to construct, repair, replace, extend, operate, use and forever maintain all water mains, sewer mains, and all surface and subsurface stormwater drains in, through or under the streets and easements as indicated on the definitive plan.

    b. In consideration of being allowed to connect to the public street system and to enable the Town to protect public health and safety, the owner must grant the Town the perpetual right or easement to pass and repass over the streets and easements in the subdivision, and to use, operate, inspect, repair, renew, replace, and forever maintain the streets, street signs, and all appurtenances or components of them, in all of the subdivision and outside it if installed to serve the subdivision. To accomplish this, the owner must retain and reserve the necessary rights and easements in any conveyances or mortgaging of land or lots and in the recording of plans and easements.

    c. The owners must grant the Town the right to enforce on-street parking regulations within the subdivision and on any streets connecting the subdivision to the public street system. For projects that include minor streets, an instrument prohibiting parking and granting the Town enforcement rights will be required.

RECEIVED

2022 11 Jul, 10:10 am

TOWN CLERK

LEXINGTON MA

APPLICATION AND PLANS

The Planning Board evaluated the Application filed by or on behalf of the Applicants in the Planning Department on May 18, 2022 and through the close of the public hearing and the following material associated with this application.

1. Form B Application, dated May 9, 2022
2. Applicant's Cover Letter, from Carlton M. Quinn, dated May 18, 2022
3. Notice of Filing of a Definitive Subdivision Plan, from Carlton M. Quinn, submitted to the Planning Board, Board of Health, and Town Clerk, dated May 13, 2022
4. Form W, submitted on May 18, 2022
5. Draft Covenant, submitted on May 18, 2022
6. Draft Home Owner's Association, dated May 17, 2022
7. Drainage and Stormwater Management Plan, prepared by Allen & Major Associates, INC., dated May 18, 2022
8. Definitive Subdivision Plans titled "Plans for Definitive Non-Residential Subdivision of Land, 12-18 & 24 Hartwell Avenue"
    a. Sheet 1 or Cover Page, prepared by Allen & Major Associates, INC., 100 Commerce Way, Woburn, MA, prepared for Greatland Realty Partners, stamped and signed by Civil Engineer, Carlton M. Quinn, No.49923, dated May 18, 2022
    b. Sheet 2 or V-101 titled "Drawing Title" prepared by Allen & Major Associates, INC., 100 Commerce Way, Woburn, MA, prepared for Greatland Realty Partners, stamped and signed by Land Surveyor, Norman I. Lipsitz, dated May 18, 2022
    c. Sheet 3 or V-102 titled "Drawing Title" prepared by Allen & Major Associates, INC., 100 Commerce Way, Woburn, MA, prepared for Greatland Realty Partners, stamped and signed by Land Surveyor, Norman I. Lipsitz, dated May 18, 2022
    d. Sheet 4 or C-001 titled "Abbreviations and Notes" prepared by Allen & Major Associates, INC., 100 Commerce Way, Woburn, MA, prepared for Greatland Realty Partners, stamped and signed by Civil Engineer, Carlton M. Quinn, No.49923, dated May 18, 2022
    e. Sheet 5 or C-002 titled "Abbreviations and Notes" prepared by Allen & Major Associates, INC., 100 Commerce Way, Woburn, MA, prepared for Greatland Realty Partners, stamped and signed by Civil Engineer, Carlton M. Quinn, No.49923, dated May 18, 2022
    f. Sheet 6 or C-102 titled "Property Rights and Dimensional Standards Plan" prepared by Allen & Major Associates, INC., 100 Commerce Way, Woburn, MA, prepared for Greatland Realty Partners, stamped and signed by Civil Engineer, Carlton M. Quinn, No.49923, dated May 18, 2022
    g. Sheet 7 or C-103 titled "Site Construction Plan" prepared by Allen & Major Associates, INC., 100 Commerce Way, Woburn, MA, prepared for Greatland Realty Partners, stamped and signed by Civil Engineer, Carlton M. Quinn, No.49923, dated May 18, 2022
    h. Sheet 8 or C-104 titled Street Layout and Profile Plan" prepared by Allen & Major Associates, INC., 100 Commerce Way, Woburn, MA, prepared for Greatland Realty Partners, stamped and signed by Civil Engineer, Carlton M. Quinn, No.49923, dated May 18, 2022

RECEIVED
2022 11 Jul, 10:10 am
TOWN CLERK
LEXINGTON MA

i. Sheet 9 or C-105 titled "Utilities Plan" prepared by Allen & Major Associates, INC., 100 Commerce Way, Woburn, MA, prepared for Greatland Realty Partners, stamped and signed by Civil Engineer, Carlton M. Quinn, No.49923, dated May 18, 2022
j. Sheet 10 or C-501 titled "Details" prepared by Allen & Major Associates, INC., 100 Commerce Way, Woburn, MA, prepared for Greatland Realty Partners, stamped and signed by Civil Engineer, Carlton M. Quinn, No.49923, dated May 18, 2022
k. Sheet 11 or C-504 titled "Details" prepared by Allen & Major Associates, INC., 100 Commerce Way, Woburn, MA, prepared for Greatland Realty Partners, stamped and signed by Civil Engineer, Carlton M. Quinn, No.49923, dated May 18, 2022
l. Sheet 12 or L-101 titled "Landscape Plan" prepared by Allen & Major Associates, INC., 100 Commerce Way, Woburn, MA, prepared for Greatland Realty Partners, stamped and signed by Landscape Architect, Jacqueline B. Trainer, No.1526, dated May 18, 2022
m. Sheet 13 or L-501 titled "Landscape Details" prepared by Allen & Major Associates, INC., 100 Commerce Way, Woburn, MA, prepared for Greatland Realty Partners, stamped and signed by Landscape Architect, Jacqueline B. Trainer, No.1526, dated May 18, 2022

9. Property Deeds, Book 79763, Pages 34-41
10. Planning Board Decision for a Preliminary Subdivision at 12-18 & 24 Hartwell Avenue, Stamped by the Town Clerk on October 22, 2021
11. Memorandum from Marissa Liggiero to Planning Director, Subject: 12-18 Hartwell Avenue Comments, Dated June 22, 2022.
12. Memorandum from Planner Molly Belanger to Planning Board, dated June 24, 2022.

RECORD OF VOTE

The following members of the Planning Board voted on June 29, 2022 to grant the certificate of action, subject to above stated terms and conditions: Robert Peters, Michael Schanbacher, Melanie Thompson, Robert Creech, and Charles Hornig.

The following members of the Planning Board voted to disapprove the certificate of action: none.

Robert D. Peters

July 11, 2022

Robert D. Peters, Chair — Date

PLANS FOR DEFINITIVE NON-RESIDENTIAL SUBDIVISION OF LAND

12-18 & 24 HARTWELL AVENUE

(MAP 84, LOT 70C & MAP 84, LOT 70E)

LEXINGTON, MA

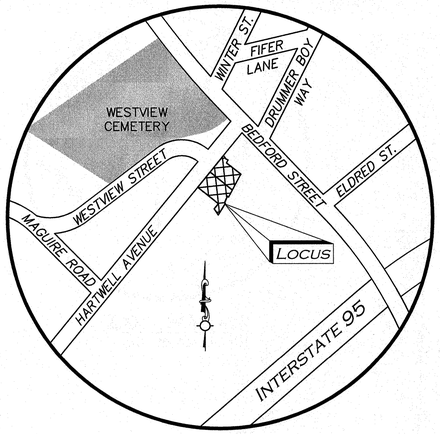

LOCUS MAP
(NOT TO SCALE)

APPLICANT/OWNER:
GREATLAND REALTY PARTNERS
ONE FEDERAL STREET, SUITE 1810
BOSTON, MA 02110
(978) 578-4673

LAND SURVEYOR & SITE CIVIL ENGINEER:
ALLEN & MAJOR ASSOCIATES, INC.
100 COMMERCE WAY, SUITE 5
WOBURN, MA 01801
781.935.6889

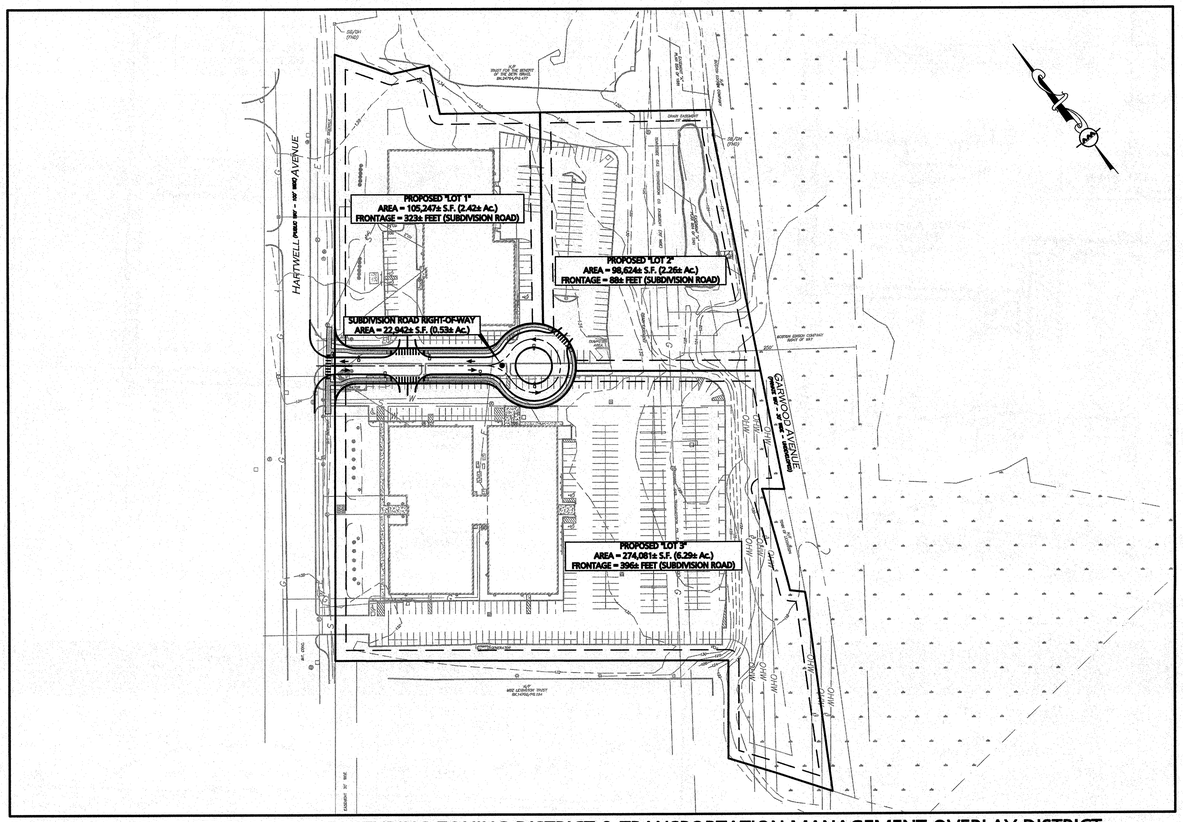

SITE ZONING: COMMERCIAL MANUFACTURING ZONING DISTRICT & TRANSPORTATION MANAGEMENT OVERLAY DISTRICT

GRAPHIC SCALE
100 0 50 100 200 400
(IN FEET)
1 inch = 100 ft.

I DECLARE, TO THE BEST OF MY PROFESSIONAL KNOWLEDGE, INFORMATION, AND BELIEF, THAT THIS PLAN WAS PREPARED IN ACCORDANCE WITH THE RULES AND REGULATIONS OF THE REGISTERS OF DEEDS.

_____ DATE

APPROVED BY:
TOWN OF LEXINGTON PLANNING BOARD

_____
_____
_____
_____
_____

DATE: _____

THIS PLAN IS SUBJECT TO A COVENANT
DATED _____
THIS PLAN IS SUBJECT TO A CERTIFICATE OF ACTION DATED _____
THIS PLAN IS SUBJECT TO A SPECIAL PERMIT
DATED _____

I _____, TOWN CLERK OF THE TOWN OF LEXINGTON, MASSACHUSETTS HEREBY CERTIFY THAT THE NOTICE OF APPROVAL OF THIS PLAN HAS BEEN RECEIVED AND RECORDED AT THIS OFFICE AND NO NOTICE OF APPEAL WAS RECEIVED DURING THE TWENTY DAYS NEXT AFTER SUCH RECEIPT AND RECORDING OF SAID NOTICE.

_____ TOWN CLERK _____ DATE

LIST OF DRAWINGS

DRAWING TITLE	SHEET NO.	ISSUED	LAST REVISED
SITE ANALYSIS MAP	V-101 - V-102	05-18-2022	——
ABBREVIATIONS AND NOTES	C-001 - C-002	05-18-2022	——
PROPERTY RIGHTS AND DIMENSIONAL STANDARDS PLAN	C-102	05-18-2022	——
SITE CONSTRUCTION PLAN	C-103	05-18-2022	——
STREET LAYOUT AND PROFILE PLAN	C-104	05-18-2022	——
UTILITIES PLAN	C-105	05-18-2022	——
DETAILS	C-501 - C-504	05-18-2022	——
LANDSCAPE PLAN	L-101	05-18-2022	——
LANDSCAPE DETAILS	L-501	05-18-2022	——

COMMONWEALTH OF MASSACHUSETTS
CARLTON M. QUINN
CIVIL
No. 49923
REGISTERED PROFESSIONAL ENGINEER
5.18.22

PROFESSIONAL ENGINEER FOR
ALLEN & MAJOR ASSOCIATES, INC.

PREPARED BY:
ALLEN & MAJOR ASSOCIATES, INC.
civil engineering ◆ land surveying
environmental consulting ◆ landscape architecture
www.allenmajor.com
100 COMMERCE WAY, SUITE 5
WOBURN MA 01801-8501
TEL: (781) 935-6889
FAX: (781) 935-2896

WOBURN, MA ◆ LAKEVILLE, MA ◆ MANCHESTER, NH

Copyright©2022 Allen & Major Associates, Inc.
All Rights Reserved

NON-RESIDENTIAL DEFINITIVE SUBDIVISION PLANS ISSUED TO PLANNING BOARD: MAY 18, 2022

N:\PROJECTS\3021-02\CIVIL\DRAWINGS\CURRENT\DEFINITIVE SUBDIVISION\C-3021-02_COVER SHEET.DWG

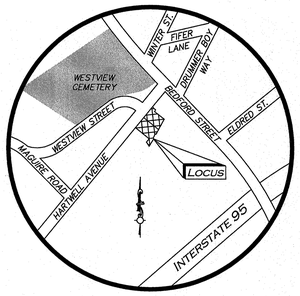

LOCUS MAP
(NOT TO SCALE)

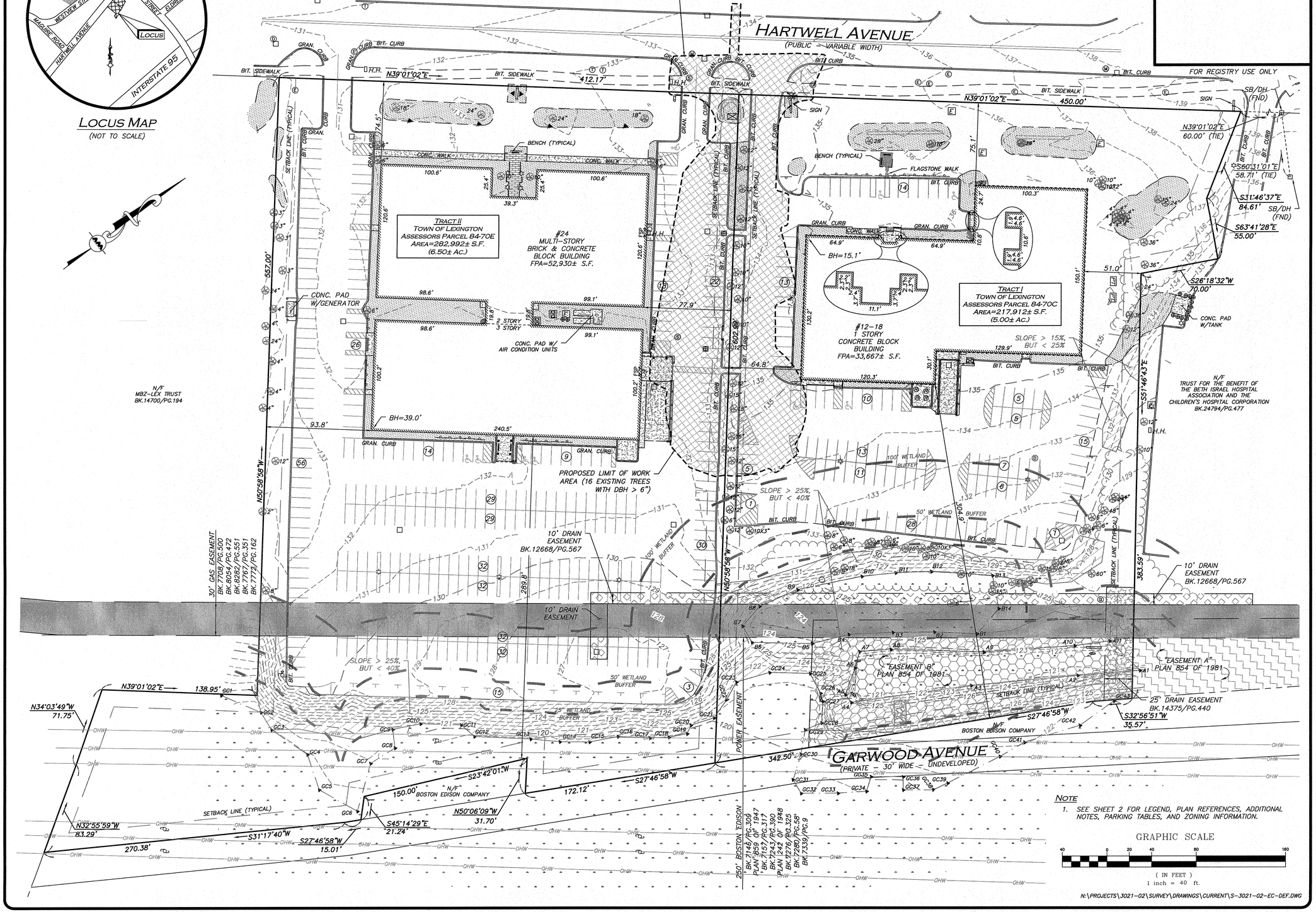

FOR REGISTRY USE ONLY

WE HEREBY CERTIFY THAT:

THIS PLAN IS THE RESULT OF AN ACTUAL ON THE GROUND SURVEY PERFORMED ON OR BETWEEN NOVEMBER 29, 2021 AND DECEMBER 7, 2021.

THIS PLAN WAS PREPARED IN ACCORDANCE WITH THE RULES AND REGULATIONS OF THE REGISTERS OF DEEDS DATED JANUARY 1, 1976 AND REVISED JANUARY 12, 1988.

ACCORDING TO DEEDS AND PLANS OF RECORD, THE PROPERTY LINES SHOWN ON THIS PLAN ARE THE LINES DIVIDING EXISTING OWNERSHIP, AND THE LINES OF THE STREETS OR WAYS SHOWN ARE THOSE OF PUBLIC OR PRIVATE STREETS AND WAYS ALREADY ESTABLISHED, AND THAT NO NEW LINES FOR THE DIVISION OF EXISTING OWNERSHIP OR FOR NEW WAYS ARE SHOWN.

THE ABOVE CERTIFICATION IS INTENDED TO MEET REGISTRY OF DEEDS REQUIREMENTS FOR THE RECORDING OF PLANS AND IS NOT A CERTIFICATION TO THE TITLE OR OWNERSHIP OF THE PROPERTY SHOWN. OWNERS OF ADJOINING PROPERTIES ARE SHOWN ACCORDING TO CURRENT TOWN OF LEXINGTON ASSESSOR'S INFORMATION.

THE ABOVE IS CERTIFIED TO THE BEST OF MY PROFESSIONAL KNOWLEDGE, INFORMATION AND BELIEF.

ALLEN & MAJOR ASSOCIATES, INC.

May 18, 2022
PROFESSIONAL LAND SURVEYOR FOR ALLEN & MAJOR ASSOCIATES, INC.

COMMONWEALTH OF MASSACHUSETTS
NORMAN I. LIPSITZ
No.28446
PROFESSIONAL LAND SURVEYOR
5/18/22

REV	DATE	DESCRIPTION

APPLICANT\OWNER:
GREATLAND REALTY PARNTERS
ONE FEDERAL STREET, SUITE 1810
BOSTON, MA 02110

PROJECT:
12-18 HARTWELL AVENUE
24 HARTWELL AVENUE
LEXINGTON, MA

PROJECT NO.	3021-02	DATE:	05/18/22
SCALE:	1" = 40'	DWG. NAME:	S-3021-02-EC-DEF
DRAFTED BY:	COB	CHECKED BY:	NL

PREPARED BY:

ALLEN & MAJOR ASSOCIATES, INC.
civil engineering ◆ land surveying
environmental consulting ◆ landscape architecture
www.allenmajor.com
100 COMMERCE WAY
WOBURN MA 01801-8501
TEL: (781) 935-6889
FAX: (781) 935-2896
WOBURN, MA ◆ LAKEVILLE, MA ◆ MANCHESTER, NH

THIS DRAWING HAS BEEN PREPARED IN DIGITAL FORMAT. CLIENT/CLIENT'S REPRESENTATIVE OR CONSULTANTS MAY BE PROVIDED COPIES OF DRAWINGS AND SPECIFICATIONS FOR HIS/HER INFORMATION AND/OR SPECIFIC USE ON THIS PROJECT. DUE TO THE POTENTIAL THAT THE PROVIDED INFORMATION MAY BE MODIFIED UNINTENTIONALLY OR OTHERWISE, ALLEN & MAJOR ASSOCIATES, INC. MAY REMOVE ALL INDICATION OF THE DOCUMENT'S AUTHORSHIP ON THE DIGITAL MEDIA. PRINTED REPRESENTATIONS OR PORTABLE DOCUMENT FORMAT OF THE DRAWINGS AND SPECIFICATIONS ISSUED SHALL BE THE ONLY RECORD COPIES OF ALLEN & MAJOR ASSOCIATES, INC.'S WORK PRODUCT.

NOTE

1. SEE SHEET 2 FOR LEGEND, PLAN REFERENCES, ADDITIONAL NOTES, PARKING TABLES, AND ZONING INFORMATION.

DRAWING TITLE: SITE ANALYSIS PLAN

SHEET No. V-101

Copyright©2022 Allen & Major Associates, Inc.
All Rights Reserved

LEGEND

STONE BOUND (SB)	
DRAIN MANHOLE (DMH)	D
SEWER MANHOLE (SMH)	S
ELECTRIC MANHOLE (EMH)	E
MISC. MANHOLE (MH)	M
TELEPHONE MANHOLE (TMH)	T
PICNIC TABLE	PT
ROUND TABLE	
CATCH BASIN (CB)	
UTILITY POLE	
UTILITY POLE W/RISER	
UTILITY POLE W/LIGHT	
GUY WIRE	
FIRE HYDRANT	
FIRE STANDPIPE	
WATER GATE	
GAS GATE	
BOLLARD	
INVERT (INV)	
LIGHT	
FLOODLIGHT	
TREE	
HEDGE	
SIGN	
SIGN	
TRANSFORMER	
MONITOR WELL	MW
DOWNSPOUT	
WETLAND FLAG	A.31
HAND HOLE	H.H.
ELECTRIC BOX	E
GAS METER	G
HANDICAPPED PARKING SPACE	
IRRIGATION CONTROL VALVE	
POSITION INDICATOR VALVE	
PARKING SPACE COUNT	16
CONCRETE	
LANDSCAPED AREA (LSA)	
RIP-RAP	
WETLAND AREA	
BRICK	
BUILDING	
BUILDING OVERHANG	
WETLAND	
EASEMENT LINE	
PROPERTY LINE	
TREE LINE	
EDGE OF PAVEMENT	
EDGE OF GRAVEL	
EDGE OF BRICK	
CURB	
CHAIN LINK FENCE	x
METAL RAILING	o
GUARDRAIL	
OVERHEAD WIRES	OHW
FOOTPRINT AREA	FPA
FINISHED FLOOR ELEVATION	FFE
BUILDING HEIGHT	BH
BITUMINOUS	BIT.
CONCRETE	CONC.
GRANITE	GRAN.
STONE BOUND W/DRILL HOLE	SB/DH
FOUND	FND
NOW OR FORMERLY	N/F
BOOK	BK.
PAGE	PG.

ZONING TABLE
COMMERCIAL AND INDUSTRAIL (CM) DISTRICT
TRANSPORTATION MANAGEMENT OVERLAY

ITEM	REQUIRED	EXISTING (12–18)	EXISTING (24)
LOT AREA (MIN)	20,000 S.F.	217,912± S.F.	282,992± S.F.
LOT FRONTAGE (MIN)	50'	450.00'	412.17'
FRONT YARD SETBACK (MIN)	N/A	75.1'	74.5'
SIDE YARD SETBACK (MIN)	15'	51.0'	77.9'
REAR YARD SETBACK (MIN)	15'	304.9'	289.8'
BUILDING COVERAGE (MAX)	N/A	0.15	0.19
BUILDING HEIGHT (MAX)	115'	15.1'	39.0'
FLOOR AREA RATIO (MAX)	N/A	0.15	0.19

PARKING SUMMARY - #12-18

STANDARD STALLS	130
HANDICAPPED STALLS	4
TOTAL STALLS	134

PARKING SUMMARY - #24

STANDARD STALLS	374
HANDICAPPED STALLS	5
TOTAL STALLS	379

LOCUS REFERENCES
- –12–18 HARTWELL AVENUE
  - –TOWN OF LEXINGTON ASSESSORS MAP 84, LOT 70C
  - –DEED BOOK 21100, PAGE 345
  - –LOT 4 FROM PLAN 582 OF 1975
  - –OWNER OF RECORD: JOSCO REALTY TRUST
- –24 HARTWELL AVENUE
  - –TOWN OF LEXINGTON ASSESSORS MAP 84, LOT 70C
  - –DEED BOOK 13600, PAGE 277
  - –DEED BOOK 14700, PAGE 196
  - –LOTS 5A & 5B FROM PLAN 7 OF 1980
  - –OWNER OF RECORD: MICO REALTY TRUST

PLAN REFERENCES
- –PLAN 7 OF 1980
- –PLAN 582 OF 1975
- –PLAN 1120 OF 1977
- –PLAN 589 OF 1947
- –PLAN 242 OF 1948
- –PLAN 1436 OF 1975
- –PLAN 1438 OF 1975
- –PLAN 854 OF 1981
- –PLAN 810 OF 1974

NOTES
1. NORTH ARROW IS BASED ON MASSACHUSETTS GRID COORDINATE SYSTEM (MAINLAND ZONE) (NAD 83).
2. BOOK/PAGE AND PLAN REFERENCES ARE TAKEN FROM MIDDLESEX (SOUTH) REGISTRY OF DEEDS IN CAMBRIDGE, MA.
3. ALL CURBING SHOWN HEREON IS CONCRETE CURB UNLESS OTHERWISE NOTED.
4. WETLANDS SHOWN HEREON WERE DELINEATED BY GODDARD CONSULTING, LLC ON OR BETWEEN DECEMBER 1, 2021 AND DECEMBER 3, 2021.
5. ZONING INFORMATION SHOWN HEREON TAKEN FROM ZONING CERTIFICATE PREPARED BY ZONING SOLUTIONS, INC. AND DATED NOVEMBER 18, 2021.

N:\PROJECTS\3021-02\SURVEY\DRAWINGS\CURRENT\S-3021-02-EC-DEF.DWG

FOR REGISTRY USE ONLY

WE HEREBY CERTIFY THAT:

THIS PLAN IS THE RESULT OF AN ACTUAL ON THE GROUND SURVEY PERFORMED ON OR BETWEEN NOVEMBER 29, 2021 AND DECEMBER 7, 2021.

THIS PLAN WAS PREPARED IN ACCORDANCE WITH THE RULES AND REGULATIONS OF THE REGISTERS OF DEEDS DATED JANUARY 1, 1976 AND REVISED JANUARY 12, 1988.

ACCORDING TO DEEDS AND PLANS OF RECORD, THE PROPERTY LINES SHOWN ON THIS PLAN ARE THE LINES DIVIDING EXISTING OWNERSHIP, AND THE LINES OF THE STREETS OR WAYS SHOWN ARE THOSE OF PUBLIC OR PRIVATE STREETS AND WAYS ALREADY ESTABLISHED, AND THAT NO NEW LINES FOR THE DIVISION OF EXISTING OWNERSHIP OR FOR NEW WAYS ARE SHOWN.

THE ABOVE CERTIFICATION IS INTENDED TO MEET REGISTRY OF DEEDS REQUIREMENTS FOR THE RECORDING OF PLANS AND IS NOT A CERTIFICATION TO THE TITLE OR OWNERSHIP OF THE PROPERTY SHOWN. OWNERS OF ADJOINING PROPERTIES ARE SHOWN ACCORDING TO CURRENT TOWN OF LEXINGTON ASSESSOR'S INFORMATION.

THE ABOVE IS CERTIFIED TO THE BEST OF MY PROFESSIONAL KNOWLEDGE, INFORMATION AND BELIEF.

ALLEN & MAJOR ASSOCIATES, INC.

May 18, 2022
PROFESSIONAL LAND SURVEYOR FOR ALLEN & MAJOR ASSOCIATES, INC.

COMMONWEALTH OF MASSACHUSETTS
NORMAN I. LIPSITZ
No. 28448
PROFESSIONAL LAND SURVEYOR
5/18/22

REV	DATE	DESCRIPTION

APPLICANT\OWNER:
GREATLAND REALTY PARNTERS
ONE FEDERAL STREET, SUITE 1810
BOSTON, MA 02110

PROJECT:
12-18 HARTWELL AVENUE
24 HARTWELL AVENUE
LEXINGTON, MA

PROJECT NO.	3021-02	DATE:	05/18/22
SCALE:	NOT TO SCALE	DWG. NAME:	S-3021-02-EC-DEF
DRAFTED BY:	COB	CHECKED BY:	NL

PREPARED BY:
ALLEN & MAJOR ASSOCIATES, INC.
civil engineering ◆ land surveying
environmental consulting ◆ landscape architecture
www.allenmajor.com
100 COMMERCE WAY
WOBURN MA 01801-8501
TEL: (781) 935-6889
FAX: (781) 935-2896
WOBURN, MA ◆ LAKEVILLE, MA ◆ MANCHESTER, NH

THIS DRAWING HAS BEEN PREPARED IN DIGITAL FORMAT. CLIENT/CLIENT'S REPRESENTATIVE OR CONSULTANTS MAY BE PROVIDED COPIES OF DRAWINGS AND SPECIFICATIONS FOR HIS/HER INFORMATION AND/OR SPECIFIC USE ON THIS PROJECT. DUE TO THE POTENTIAL THAT THE PROVIDED INFORMATION MAY BE MODIFIED UNINTENTIONALLY OR OTHERWISE, ALLEN & MAJOR ASSOCIATES, INC. MAY REMOVE ALL INDICATION OF THE DOCUMENT'S AUTHORSHIP ON THE DIGITAL MEDIA. PRINTED REPRESENTATIONS OR PORTABLE DOCUMENT FORMAT OF THE DRAWINGS AND SPECIFICATIONS ISSUED SHALL BE THE ONLY RECORD COPIES OF ALLEN & MAJOR ASSOCIATES, INC.'S WORK PRODUCT.

DRAWING TITLE: SITE ANALYSIS PLAN

SHEET No. V-102

Copyright©2022 Allen & Major Associates, Inc.
All Rights Reserved

NOTES

GENERAL NOTES:

1. PROPERTY LINE AND EXISTING SITE CONDITIONS INFORMATION SHOWN HEREON IS TAKEN FROM A PLAN ENTITLED "ALTA/ACSM LAND TITLE SURVEY – 24 HARTWELL AVENUE IN LEXINGTON, MASSACHUSETTS (MIDDLESEX COUNTY)", DATED MARCH 17, 2010, PREPARED BY BSC GROUP, PREPARED FOR LEXINGTON MANAGEMENT INC., AND PROVIDED TO ALLEN & MAJOR ASSOCIATES BY GREATLAND REALTY TRUST. THE INFORMATION SHOWN IS SUBJECT TO FIELD VERIFICATION AND MAY BE UPDATED AS NEEDED.
2. VERTICAL DATUM IS NAVD 88.
3. ZONING DISTRICT IS COMMERCIAL MANUFACTURING (CM) AND TRANSPORTATION MANAGEMENT OVERLAY DISTRICT (TMOD).
4. OVERALL LOT SIZE: 11.5± ACRES
5. DURING CONSTRUCTION, ALL VEHICLES MUST BE PARKED ON SITE.
6. DURING CONSTRUCTION, ALL STAGING AND DELIVERIES WILL OCCUR ON SITE.
7. THIS PROJECT WILL BE SERVED BY PUBLIC WATER AND SEWER AND PRIVATE, NATURAL GAS, TELEPHONE, CABLE AND ELECTRIC. ALL UTILITY LINES WILL BE INSTALLED UNDERGROUND UNLESS OTHERWISE NOTED.
8. THE CONTRACTOR IS SPECIFICALLY CAUTIONED THAT THE LOCATION AND/OR ELEVATION OF EXISTING UTILITIES AND STRUCTURES AS SHOWN ON THESE PLANS IS BASED ON RECORDS OF VARIOUS UTILITY COMPANIES AND WHERE POSSIBLE, MEASUREMENTS TAKEN IN THE FIELD. THIS INFORMATION IS NOT TO BE RELIED ON AS BEING EXACT OR COMPLETE. THE LOCATION OF ALL UNDERGROUND UTILITIES AND STRUCTURES SHALL BE VERIFIED IN THE FIELD BY THE CONTRACTOR PRIOR TO THE START OF CONSTRUCTION. THE CONTRACTOR MUST CONTACT THE APPROPRIATE UTILITY COMPANY, ANY GOVERNING PERMITTING AUTHORITY, AND "DIGSAFE" AT LEAST 72 HOURS PRIOR TO ANY EXCAVATION WORK TO REQUEST EXACT FIELD LOCATION OF UTILITIES AND THE ENGINEER SHALL BE NOTIFIED IN WRITING OF ANY UTILITIES INTERFERING WITH THE PROPOSED CONSTRUCTION AND APPROPRIATE REMEDIAL ACTION TAKEN BEFORE PROCEEDING WITH THE WORK. IT SHALL BE THE RESPONSIBILITY OF THE CONTRACTOR TO RELOCATE ALL EXISTING UTILITIES WHICH CONFLICT WITH THE PROPOSED IMPROVEMENTS SHOWN ON THE PLANS AT NO ADDITIONAL COST.
9. ALL PROPOSED MAIN BUILDING ENTRANCES AND WALKS SHALL BE HANDICAP ACCESSIBLE PER FEDERAL ADA & MA AAB REGULATIONS.
10. ALL SITE WORK DONE FOR THIS PROJECT SHALL BE IN STRICT ACCORDANCE WITH THE SITE PLANS AND SITE WORK SPECIFICATIONS FOR CONSTRUCTION.
11. ANY DAMAGE TO PRIVATE OR PUBLIC PROPERTIES DUE TO THE CONTRACTOR'S ACTIVITIES SHALL BE REPAIRED AND RESTORED BY THE CONTRACTOR AT THEIR OWN EXPENSE.
12. ALL PROPERTY MARKERS AND STREET LINE MONUMENTS SHALL BE PROPERLY PROTECTED DURING CONSTRUCTION. ANY DAMAGE TO THESE ITEMS SHALL BE REPAIRED AND RESTORED BY A SURVEYOR REGISTERED IN THE STATE OF MASSACHUSETTS AT THE CONTRACTOR'S EXPENSE.
13. ALL APPLICABLE PERMITS AND AN APPROVED SET OF PLANS SHALL BE AVAILABLE AT THE CONSTRUCTION SITE.
14. THE CONTRACTOR IS RESPONSIBLE FOR SCHEDULING A PRE–CONSTRUCTION MEETING THE WITH THE APPROPRIATE CITY DEPARTMENTS, THE APPROPRIATE UTILITY COMPANIES, THE OWNER AND OWNER'S REPRESENTATIVE. THE MEETING SHALL TAKE PLACE PRIOR TO THE START OF CONSTRUCTION AND THE CONTRACTOR MUST PROVIDE 48 HOURS NOTICE TO ALL ATTENDEES PRIOR TO THE START OF THE MEETING.
15. APPROPRIATE WARNING SIGNS, MARKERS, BARRICADES AND/OR FLAG MEN SHALL BE PROVIDED TO REGULATE TRAFFIC. CONSTRUCTION TRAFFIC CONTROLS SHALL BE IMPLEMENTED AND OPERATED ACCORDING TO THE MASS DEPARTMENT OF TRANSPORTATION, THE MANUAL ON UNIFORM TRAFFIC CONTROL DEVICES (MUTCD) AND THE LOCAL AUTHORITY.
16. THE CONTRACTOR IS RESPONSIBLE FOR OBTAINING ADDITIONAL BENCHMARK INFORMATION IF REQUIRED. THE CONTRACTOR IS RESPONSIBLE FOR LOCATING AND PROTECTING ALL EXISTING BENCHMARKS. IF IT IS NECESSARY TO RELOCATE A BENCHMARK, IT SHALL BE RELOCATED BY A MASSACHUSETTS PROFESSIONAL LAND SURVEYOR AND DONE SO AT THE CONTRACTOR'S EXPENSE.
17. ALL BUILDING DIMENSIONS ARE MEASURED TO THE OUTSIDE FACE OF THE BUILDING.
18. ALL RADII ARE 3 FEET UNLESS OTHERWISE NOTED.
19. ALL PARKING LOT AND AISLE DIMENSIONS ARE TAKEN FROM THE FACE OF CURB AND INDICATE EDGE OF PAVEMENT.
20. CONSTRUCTION DURING WET WEATHER OR WINTER CONDITIONS IS TO BE ANTICIPATED AND PROVISIONS TO ADEQUATELY ADDRESS THESE CONDITIONS SHALL BE THE RESPONSIBILITY OF THE CONTRACTOR AT NO ADDITIONAL COST.
21. THE CONTRACTOR IS RESPONSIBLE FOR OBTAINING AND PAYING FOR ANY PERMITS AND/OR CONNECTION FEES REQUIRED TO CARRY OUT THE WORK INCLUDING BUT NOT LIMITED TO DEMOLITION.
22. DISPOSAL OF ALL DEMOLISHED MATERIALS INCLUDING EXISTING MISC. CONSTRUCTION DEBRIS IS THE RESPONSIBILITY OF THE CONTRACTOR AND MUST BE DISPOSED OF OFF–SITE IN ACCORDANCE WITH ALL FEDERAL, STATE, AND LOCAL MUNICIPAL REQUIREMENTS AT NO ADDITIONAL COST.
23. ALL DISTURBED AREAS NOT NOTED TO RECEIVE OTHER TREATMENT ARE TO RECEIVE SIX INCHES (6") MINIMUM OF TOPSOIL & SEED, AND BE MAINTAINED UNTIL ESTABLISHED & ACCEPTED.
24. EXISTING STRUCTURES WITHIN CONSTRUCTION LIMITS ARE TO BE PROTECTED, ABANDONED, REMOVED OR RELOCATED AS NECESSARY.
25. CONTRACTOR SHALL BE RESPONSIBLE FOR ALL RELOCATIONS, INCLUDING BUT NOT LIMITED TO, ALL UTILITIES, STORM DRAINAGE, SIGNS, & POLES, ETC. AS REQUIRED. ALL WORK SHALL BE IN ACCORDANCE WITH THE LOCAL MUNICIPALITY'S GOVERNING AUTHORITY'S SPECIFICATIONS AND SHALL BE APPROVED BY SAME.
26. THE CONTRACTOR SHALL COORDINATE WITH ALL UTILITY COMPANIES TO DETERMINE EXACT POINT OF SERVICE CONNECTION AND DISCONNECTION AT EXISTING UTILITY.
27. ALL ELEVATIONS SHOWN ARE IN REFERENCE TO THE BENCHMARKS SHOWN ON THE EXISTING CONDITIONS SITE PLAN AND MUST BE VERIFIED BY THE GENERAL CONTRACTOR AT GROUNDBREAKING.
28. CONTRACTOR IS RESPONSIBLE FOR DIGGING TEST HOLES AND VERIFYING ANY EXISTING UTILITY OR STRUCTURE PRIOR TO CONSTRUCTION. CONTRACTOR SHALL VERIFY THAT BASED ON EXACT LOCATION OF EXISTING UTILITIES, THERE ARE NO CONFLICTS BETWEEN THE EXISTING AND THE PROPOSED UTILITIES/DRAINAGE STRUCTURES.
29. THE CONTRACTOR SHALL ADHERE TO ALL PERMIT CONDITIONS PROVIDED BY ALL GOVERNING AGENCIES AT NO ADDITIONAL COSTS. THIS INCLUDES BUT IS NOT LIMITED TO BUILDING PERMITS, DEMOLITION PERMITS, PLUMBING, GAS, AND ELECTRICAL PERMITS. PERMITS FROM THE PLANNING BOARD OR CITY COUNCIL.
30. DURING EXCAVATION, ANY EXISTING EARTH CUT MATERIALS THAT DO NOT MEET THE "ORDINARY FILL" SPECIFICATIONS OR "LOAM" SPECIFICATIONS AND CANNOT BE REUSED SHALL BE REMOVED OFFSITE BY THE CONTRACTOR AT NO ADDITIONAL COST TO THE OWNERS. MATERIAL WHICH DOES NOT MEET THE SPECIFICATION INCLUDES ALL BOULDERS, ROCKS, CONSTRUCTION DEBRIS, AND MISC. MATERIAL. PRIOR TO REUSE, CONTRACTOR TO PROVIDE TESTING REPORT OF SIEVE ANALYSIS TO ENGINEER FOR APPROVAL. CONTRACTOR CAN AMEND MATERIALS AND CONTINUE TO RETEST AS NECESSARY AT NO ADDITIONAL COST TO OWNER. AFTER AMENDING, IF MATERIAL STILL DOES NOT MEET THE SPECIFICATIONS, IT IS TO BE REMOVED FROM SITE AT NO ADDITIONAL COST TO THE OWNER AND IN ACCORDANCE WITH ALL FEDERAL, STATE, AND LOCAL LAWS AND REGULATIONS.
31. ANY PROPOSED SIGNAGE SHALL BE APPROVED BY SEPARATE APPLICATION TO THE APPROPRIATE MUNICIPAL AUTHORITY INCLUDING BUT NOT LIMITED TO THE ZONING BOARD OF APPEALS AND CITY COUNCIL. ALL PROPOSED SIGNAGE MUST MEET THE REQUIREMENTS OF THE LOCAL ZONING CODE.

GRADING & DRAINAGE NOTES:

1. EXISTING PAVEMENT SHALL BE SAW–CUT AND PAVEMENT JOINT SHALL BE INSTALLED WHERE NECESSARY TO ENSURE A SMOOTH CONTINUOUS GRADE.
2. ALL GRADING OPERATIONS SHALL BE COORDINATED WITH THE APPROPRIATE UTILITY COMPANIES.
3. IN LANDSCAPED AREAS THE TOP ELEVATION OF MANHOLES SHALL MATCH THE FINISH GRADE OF THE TOPSOIL. IN PAVED AREAS THE TOP ELEVATIONS OF MANHOLES SHALL MATCH FINISH GRADE.
4. ALL AREAS DISTURBED DURING CONSTRUCTION SHALL BE STABILIZED AS SOON AS POSSIBLE UPON COMPLETION OF CONSTRUCTION WORK IN THE AREA.
5. TEMPORARY TUBULAR BARRIER PROTECTION AND/OR SILT SACKS SHALL BE INSTALLED AND MAINTAINED AT EXISTING DRAINAGE STRUCTURES DURING CONSTRUCTION, TO PREVENT SEDIMENT LADEN RUNOFF FROM ENTERING THE DRAINAGE SYSTEM.
6. CONTRACTOR IS RESPONSIBLE FOR DEMOLITION OF EXISTING STRUCTURES INCLUDING REMOVAL OF ANY EXISTING UTILITIES SERVING THE STRUCTURE PER DEMOLITION PLAN.
7. ALL CATCH BASINS, MANHOLES, INFILTRATION SYSTEMS, AND WATER QUALITY STRUCTURES ARE TO BE CLEANED TO REMOVE ALL CONSTRUCTION SILT AND DEBRIS PRIOR TO FINAL APPROVAL.
8. IF ANY EXISTING UTILITY STRUCTURES TO REMAIN ARE DAMAGED DURING CONSTRUCTION, IT SHALL BE THE CONTRACTOR'S RESPONSIBILITY TO REPAIR AND/OR REPLACE THE EXISTING STRUCTURE AS NECESSARY TO RETURN IT TO EXISTING CONDITIONS OR BETTER AT NO ADDITIONAL COST.
9. ALL STORM PIPES ENTERING STRUCTURES SHALL BE GROUTED TO ENSURE CONNECTION AT STRUCTURE IS WATERTIGHT.
10. ALL STORM DRAIN MANHOLES SHALL HAVE TRAFFIC BEARING RING & COVERS & SHALL BE LABELED "DRAIN".
11. THE CONTRACTOR SHALL ADHERE TO ALL TERMS & CONDITIONS AS OUTLINED IN THE GENERAL N.P.D.E.S. PERMIT FOR STORM WATER DISCHARGE ASSOCIATED WITH CONSTRUCTION ACTIVITIES.
12. CONTRACTOR SHALL ENSURE POSITIVE DRAINAGE AWAY FROM BUILDINGS FOR ALL NATURAL AND PAVED AREAS.
13. CONTRACTOR SHALL APPLY STABILIZATION FABRIC TO ALL SLOPES STEEPER THAN 3H:1V.
14. ALL DRAINAGE SYSTEM COMPONENTS SHALL CONFORM TO LOCAL REQUIREMENTS.

UTILITY NOTES:

1. THE LATEST STANDARDS OF THE LOCAL MUNICIPALITY SHALL BE FOLLOWED WHEN INSTALLING ANY STORM DRAIN WORK. STORM DRAIN WORK WILL BE INSPECTED BY THE LOCAL GOVERNING AUTHORITY PERSONNEL AND ALL COSTS SHALL BE THE RESPONSIBILITY OF THE CONTRACTOR.
2. WHERE AN EXISTING UTILITY IS FOUND TO CONFLICT WITH THE PROPOSED WORK, THE LOCATION, ELEVATION AND SIZE OF THE UTILITY SHALL BE ACCURATELY DETERMINED WITHOUT DELAY BY THE CONTRACTOR, AND THE INFORMATION FURNISHED TO THE ENGINEER FOR RESOLUTION.
3. ABANDONED EXISTING UTILITIES AND UTILITIES TO BE ABANDONED SHALL EITHER BE ABANDONED IN PLACE AS NOTED OR SHALL BE REMOVED AND DISPOSED OF AS SPECIFIED. ALL UTILITIES SCHEDULED FOR ABANDONMENT OR REMOVAL AND DISPOSAL MUST BE COORDINATED BY THE CONTRACTOR WITH THE RESPECTIVE UTILITY OWNER. WHEN ABANDONED UTILITIES ARE TO BE LEFT IN PLACE, PLUG OR CAP THE ENDS OF THE CONDUITS AND PIPES. REMOVE ABANDONED UTILITY MANHOLES, JUNCTION BOXES AND SIMILAR STRUCTURES TO A MINIMUM DEPTH OF 4 FEET BELOW FINISHED GRADE AND PUNCTURE OR BREAK THE BOTTOM SLABS OF MANHOLES AND SIMILAR STRUCTURE TO ALLOW DRAINAGE. BACKFILL AND COMPACT EXCAVATIONS RESULTING FROM REMOVAL OF UTILITY FACILITATES, AS REQUIRED TO RESTORE THE ORIGINAL GRADE.
4. THE CONTRACTOR SHALL MAKE ARRANGEMENTS FOR THE ALTERATION AND ADJUSTMENTS OF NATURAL GAS, ELECTRIC, TELEPHONE AND ANY OTHER UTILITY BY THE UTILITY OWNER.
5. THE CONTRACTOR SHALL USE THE FOLLOWING PIPE MATERIALS:
   - DRAIN – HDPE (HIGH DENSITY CORRUGATED POLYETHYLENE PIPE WITH SMOOTH INNER WALL), ASTM D2321 (UNLESS OTHERWISE SPECIFIED ON PLAN)
8. BEFORE UTILITY WORK BEGINS, THE CONTRACTOR WILL COORDINATE WITH THE LOCAL MUNICIPALITY FOR THE APPROPRIATE PERMIT AND INSPECTION FEES.
9. A MINIMUM OF 10 FEET CLEAR HORIZONTALLY SHALL BE MAINTAINED BETWEEN WATER MAINS AND SANITARY SEWER MAINS AND/OR STORM DRAINS. WHENEVER CONDITIONS PREVENT A LATERAL SEPARATION OF 10 FEET TO A WATER MAIN, THE WATER MAIN SHALL BE LAID IN A SEPARATE TRENCH AND THE DIFFERENCE IN ELEVATION BETWEEN THE WATER MAIN AND THE SEWER MAIN SHALL BE AT LEAST 18 INCHES.
10. ALL FILL MATERIAL IS TO BE IN PLACE, AND COMPACTED BEFORE INSTALLATION OF PROPOSED UTILITIES.
11. CONTRACTOR SHALL NOTIFY THE UTILITY AUTHORITY'S INSPECTORS 72 HOURS BEFORE CONNECTING TO ANY EXISTING LINE.
12. MINIMUM TRENCH WIDTH SHALL BE 2 FEET.
13. CONTRACTOR SHALL MAINTAIN A MINIMUM OF 5'–0" COVER AND A MAXIMUM OF 8'–0" COVER ON ALL WATERLINES.
14. IN THE EVENT OF A VERTICAL CONFLICT BETWEEN WATERLINES, SANITARY LINES, STORM LINES AND GAS LINES (EXISTING AND PROPOSED), THE SANITARY LINE SHALL BE DUCTILE IRON PIPE WITH MECHANICAL JOINTS AT LEAST 10 FEET ON BOTH SIDES OF CROSSING, THE WATERLINE SHALL HAVE MECHANICAL JOINTS WITH APPROPRIATE THRUST BLOCKING AS REQUIRED TO PROVIDE A MINIMUM OF 18" CLEARANCE BETWEEN THE PIPES. WHERE THE WATERLINE IS LESS THAN THE 18" VERTICAL CLEARANCE AND MEETING 10' HORIZONTAL CLEARANCE CANNOT BE MET, THE WATER MUST BE ENCASED IN CONCRETE.
15. ALL CONCRETE FOR ENCASEMENTS SHALL HAVE A MINIMUM 28 DAY COMPRESSION STRENGTH OF 3000 P.S.I.
16. CONTRACTOR IS RESPONSIBLE FOR COMPLYING WITH THE SPECIFICATIONS OF THE LOCAL AUTHORITIES WITH REGARDS TO MATERIALS AND INSTALLATION OF THE WATER, SEWER, GAS AND ELECTRICAL AND TELECOMMUNICATIONS LINES.
17. ALL NECESSARY INSPECTIONS AND/OR CERTIFICATIONS REQUIRED BY CODES AND/OR UTILITY SERVICE COMPANIES SHALL BE PERFORMED PRIOR TO ANNOUNCED BUILDING POSSESSION AND THE FINAL CONNECTION OF SERVICE.
18. DRAWINGS DO NOT NECESSARILY SHOW ALL EXISTING UTILITIES.

ABBREVIATIONS

ABAN	ABANDON
ADJ	ADJUST
B	BORING
BC	BOTTOM OF CURB
BIT	BITUMINOUS
BCB	BITUMINOUS CONCRETE BERM
BLDG	BUILDING
BM	BENCH MARK
BOS	BOTTOM OF SLOPE
BOW	BOTTOM OF WALL
BRK	BRICK
BV&B	BUTTERFLY VALVE & BOX
BVW	BORDERING VEGETATED WETLAND
CATV	CABLE TELEVISION
CB	CATCH BASIN
CF	CUBIC FEET
CFS	CUBIC FEET PER SECOND
CI	CAST IRON (PIPE)
CL	CENTERLINE
CLDI	CEMENT LINED DUCTILE IRON (PIPE)
CM	CONSTRUCTION MANAGER
CMP	CORRUGATED METAL PIPE
CO	CLEAN OUT
CONC	CONCRETE
CONST	CONSTRUCTION
CONT	CONTRACTOR
CRD	COORDINATE
CPP	CORRUGATED POLYETHYLENE PIPE
CUL	CULVERT
CY	CUBIC YARD
DB	DISTRIBUTION BOX
DBL	DOUBLE
DEM	DEMOLISH
DET	DETENTION
DI	DUCTILE IRON (PIPE)
DIA	DIAMETER
DIM	DIMENSION
DMH	DRAIN MANHOLE
DW	DOMESTIC WATER (OR DRY WELL)
DWG	DRAWING
DYCL	DOUBLE YELLOW CENTERLINE
EHH	ELECTRIC HANDHOLE
EL	ELEVATION
ELEC	ELECTRIC
EMH	ELECTRIC MANHOLE
EOP	EDGE OF PAVEMENT
EOR	EDGE OF ROAD
EOW	EDGE OF WETLANDS
ETC	ELECTRIC, TELEPHONE, CABLE
EXIST	EXISTING
EXT	EXTERIOR
FA	FIRE ALARM
FCC	FLUSH CONCRETE CURB
FES	FLARED END SECTION
FFE	FINISH FLOOR ELEVATION
FLNP	FIRE LANE NO PARKING
FPS	FEET PER SECOND
FS	FIRE SERVICE
FT	FOOT/FEET
GC	GENERAL CONTRACTOR
GEN	GENERAL
GG	GAS GATE
GR	GUIDE RAIL
GRAN	GRANITE
GV	GATE VALVE
GV&B	GATE VALVE & BOX
GW	GROUND WATER
HCR	HANDICAP RAMP
HOR	HORIZONTAL
HT	HEIGHT
HW	HEADWALL
HWY	HIGHWAY
HYD	HYDRANT
ID	INSIDE DIAMETER
IN	INCHES
INCL	INCLUDE
INST	INSTALLED
INV, I.E.	INVERT, INVERT ELEVATION
L	LENGTH
LB	LEACHING BASIN
LP	LIGHT POLE
MAT	MATERIAL
MAX	MAXIMUM
MH	MANHOLE
MIN	MINIMUM
MISC	MISCELLANEOUS
MTD	MOUNTED
MW	MONITORING WELL
N	NORTH
NIC	NOT IN CONTRACT
NO	NUMBER
NTS	NOT TO SCALE
OC	ON CENTER
OD	OUTSIDE DIAMETER
OHW	OVERHEAD WIRE
OVHD	OVERHEAD
OW	OBSERVATION WELL
PC	POINT OF CURVATURE
PCC	PRECAST CONCRETE CURB
PI	POINT OF INTERSECTION
PKG	PARKING
PL	PROPERTY LINE
PLMB	PLUMBING
POC	POINT ON CURVATURE
POT	POINT ON TANGENT
PRC	POINT OF REVERSE CURVATURE
PROP, P	PROPOSED
PT	POINT (OR POINT OF TANGENT)
PVC	POLYVINYL CHLORIDE (PIPE)
R&R	REMOVE & RESET/REPLACE
R&S	REMOVE & STACK
RCP	REINFORCED CONCRETE PIPE
RD	ROAD (OR ROOF DRAIN)
RED	REDUCER
RELOC	RELOCATE
REM	REMOVE
RET	RETAIN, RETAINING OR RETENTION
ROW	RIGHT OF WAY
RR	RAILROAD
RWL	RAIN WATER LEADER
RWY	ROADWAY
SD	SUBDRAIN
SF	SQUARE FEET
SGC	SLOPED GRANITE CURB
SMH	SEWER MANHOLE
SP	STANDPIPE
SPEC	SPECIFICATION
STA	STATION
STC	STORMCEPTOR
STD	STANDARD
STRTL	STRUCTURAL
SWEL	SOLID WHITE EDGE LINE
SW	SIDEWALK
SWLL	SOLID WHITE LANE LINE
SYCL	SOLID YELLOW CENTERLINE
TB	TEST BORING
TC	TOP OF CURB
TD	TRENCH DRAIN
TEL, T	TELEPHONE
TMH	TELEPHONE MANHOLE
TOS	TOP OF SLOPE
TOW	TOP OF WALL
TP	TEST PIT
TS&V	TAPPING SLEEVE & VALVE
TYP	TYPICAL
UD	UNDERDRAIN
UL	UNDERWRITERS LABORATORY
UP	UTILITY POLE
VCP	VITRIFIED CLAY PIPE
VERT	VERTICAL
VGC	VERTICAL GRANITE CURB
WD	WOOD
WG	WATER GATE
WM	WATER MAIN
WMH	WATER MANHOLE
WSO	WATER SHUTOFF

APPROVED BY:
TOWN OF LEXINGTON PLANNING BOARD

_____
_____
_____
_____
_____
DATE: _____

THIS PLAN IS SUBJECT TO A COVENANT

DATED _____

THIS PLAN IS SUBJECT TO A CERTIFICATE OF

ACTION DATED _____

THIS PLAN IS SUBJECT TO A SPECIAL PERMIT

DATED _____

I _____ TOWN CLERK OF THE TOWN OF LEXINGTON, MASSACHUSETTS HEREBY CERTIFY THAT THE NOTICE OF APPROVAL OF THIS PLAN HAS BEEN RECEIVED AND RECORDED AT THIS OFFICE AND NO NOTICE OF APPEAL WAS RECEIVED DURING THE TWENTY DAYS NEXT AFTER SUCH RECEIPT AND RECORDING OF SAID NOTICE.

_____ _____
TOWN CLERK DATE

5.18.22

COMMONWEALTH OF MASSACHUSETTS
CARLTON M. QUINN
CIVIL
No.49923
REGISTERED PROFESSIONAL ENGINEER

PROFESSIONAL ENGINEER FOR
ALLEN & MAJOR ASSOCIATES, INC.

REV	DATE	DESCRIPTION

APPLICANT\OWNER:
12-18 HARTWELL OWNER, LLC. &
24 HARTWELL OWNER, LLC
C/O GREATLAND REALTY PARTNERS
ONE FEDERAL STREET, SUITE 1810
BOSTON, MA 02110

PROJECT:
DEFINITIVE
NON-RESIDENTIAL SUBDIVISION
12-18 & 24 HARWELL AVENUE
LEXINGTON, MA

PROJECT NO.	3021-02	DATE ISSUED:	5-18-2022
SCALE:	NONE	DWG. NAME:	CIVIL
DESIGNED BY:	DMR/SJL	CHECKED BY:	CMQ

PREPARED BY:

ALLEN & MAJOR ASSOCIATES, INC.
civil engineering ◆ land surveying
environmental consulting ◆ landscape architecture
www.allenmajor.com
100 COMMERCE WAY, SUITE 5
WOBURN MA 01801
TEL: (781) 935-6889
FAX: (781) 935-2896
WOBURN, MA ◆ LAKEVILLE, MA ◆ MANCHESTER, NH

THIS DRAWING HAS BEEN PREPARED IN DIGITAL FORMAT. CLIENT/CLIENT'S REPRESENTATIVE OR CONSULTANTS MAY BE PROVIDED COPIES OF DRAWINGS AND SPECIFICATIONS FOR HIS/HER INFORMATION AND/OR SPECIFIC USE ON THIS PROJECT. DUE TO THE POTENTIAL THAT THE PROVIDED INFORMATION MAY BE MODIFIED UNINTENTIONALLY OR OTHERWISE, ALLEN & MAJOR ASSOCIATES, INC. MAY REMOVE ALL INDICATION OF THE DOCUMENT'S AUTHORSHIP ON THE DIGITAL MEDIA. PRINTED REPRESENTATIONS OR PORTABLE DOCUMENT FORMAT OF THE DRAWINGS AND SPECIFICATIONS ISSUED SHALL BE THE ONLY RECORD COPIES OF ALLEN & MAJOR ASSOCIATES, INC.'S WORK PRODUCT.

DRAWING TITLE: ABBREVIATIONS & NOTES

SHEET No. C-001

Copyright©2022 Allen & Major Associates, Inc.
All Rights Reserved

N:\PROJECTS\3021-02\CIVIL\DRAWINGS\CURRENT\DEFINITIVE SUBDIVISION\C-3021-01_ABBREVIATIONS & NOTES1.DWG

EROSION CONTROL NOTES

EROSION & SEDIMENTATION CONTROL NOTES:

1. EROSION CONTROL SHALL BE INSTALLED PRIOR TO CONSTRUCTION AND SHALL BE ADEQUATE TO MAINTAIN SEDIMENT ON SITE. ANY MODIFICATIONS TO SILT CONTROLS SHOWN ON THE APPROVED PLANS AS A RESULT OF ACTUAL FIELD CONDITIONS OR CONSTRUCTION PRACTICES SHALL BE INSTALLED IN ACCORDANCE WITH B.M.P. (BEST MANAGEMENT PRACTICES) PER THE E.P.A. 2017 "CONSTRUCTION GENERAL PERMIT" MANUAL, AND MASSACHUSETTS 2003 EROSION & SEDIMENT CONTROL GUIDELINES FOR URBAN AND SUBURBAN AREAS, ANY SUCH MODIFICATIONS FROM THE ABOVE MANUALS SHALL BE INSTALLED AS APPROVED BY THE ENGINEER OR THE LOCAL MUNICIPALITY.

2. AREAS OF EXPOSED SOIL UNDERGOING CONSTRUCTION THAT WILL NOT BE COVERED AND OR FINISHED GRADED SHALL BE STABILIZED AS SOON AS PRACTICABLE BUT IN NO CASE MORE THAN 14 DAYS AFTER THE CONSTRUCTION ACTIVITY (UNLESS MUNICIPALITY HAS STRICTER REQUIREMENTS WHICH SHALL BE FOLLOWED) IN THAT PORTION OF THE SITE HAS TEMPORARILY OR PERMANENTLY CEASED. TEMPORARY EROSION CONTROL MEASURES SHALL INCLUDE EROSION CONTROL MESH, NETTING OR MULCH AS DIRECTED BY THE OWNER'S REPRESENTATIVE AND SHOWN ON THE DESIGN PLANS. IF MULCH IS USED, STRAW MULCH SHALL BE APPLIED AT THE RATE OF 4 BALES PER 1,000 SQUARE FEET. APPLICATION AREA SHALL BE SUFFICIENTLY COVERED WITH MULCH TO AVOID ANY VISIBLE SOIL EXPOSURE. MULCH SHALL BE KEPT MOIST TO AVOID LOSS DUE TO WIND. MULCH AND NETTING SHALL BE APPLIED IN THE BASE OF ALL GRASSED WATERWAYS, IN VEGETATIVE SLOPES WHICH EXCEED 15% AND DISTURBED AREAS WITHIN 100 FEET OF WETLANDS OR STREAMS.

3. IF DISTURBED AREAS DO NOT RECEIVE FINAL SEEDING BY OCTOBER 1ST OF THE CONSTRUCTION YEAR, THEN ALL DISTURBED AREAS SHALL BE SEEDED WITH A WINTER COVER CROP AT THE RATE OF 3 LBS PER 1,000 SQUARE FEET. WINTER SEEDING SHALL BE COVERED WITH EROSION CONTROL MESH (MULCH AND NETTING). HEAVY GRADE MATS SHALL BE USED IN THE BASE OF ALL GRASSED WATERWAYS ON VEGETATED SLOPES IN EXCESS OF 15%, AND ANY DISTURBED AREAS WITHIN 100 FEET OF WETLANDS OR STREAMS. MULCH AND NETTING SHALL ALSO BE PROVIDED FOR ADDITIONAL WINTER PROTECTION.

4. ALL TOPSOIL SHALL BE COLLECTED, STOCKPILED, SEEDED WITH RYE AT 3LBS PER 1,000 SQUARE FOOT AND MULCHED, AND REUSED AS REQUIRED. TUBULAR BARRIERS SHALL BE PLACED DOWN GRADIENT FROM STOCKPILED LOAM. LOAM SHALL BE STOCKPILED AT LOCATIONS DESIGNATED BY THE OWNER AND ENGINEER.

5. ALL TUBULAR BARRIERS, SILT SACKS, AND EROSION CONTROL BERMS SHALL BE INSTALLED ACCORDING TO THE SITE PREPARATION PLAN. THESE SHALL BE MAINTAINED DURING DEVELOPMENT TO REMOVE SEDIMENT FROM RUNOFF WATER. ALL THE FILTER BARRIERS AND EROSION CONTROL BERMS SHALL BE INSPECTED AFTER ANY RAINFALL OR RUNOFF EVENT, MAINTAINED AND CLEANED UNTIL ALL AREAS HAVE AT LEAST 85–90% VIGOROUS PERENNIAL COVER OF GRASSES.

6. ADJACENT ROADS SHALL BE PERIODICALLY SWEPT OR WASHED TO AVOID TRACKING MUD, DUST OR DEBRIS FROM THE CONSTRUCTION AREA AS OFTEN AS NECESSARY (WHICH COULD BE ON A DAILY BASIS) TO REMOVE ANY SOIL OR SEDIMENTS AT NO ADDITIONAL COST TO THE OWNER. A WATERING TRUCK WILL BE USED TO PERIODICALLY SPRINKLE CONSTRUCTION AREAS IN ORDER TO KEEP THE LEVEL OF DUST TO A MINIMUM DURING THE DRY MONTHS AT NO ADDITIONAL COST TO THE OWNER.

7. THE CONTRACTOR SHALL USE EXTREME CAUTION TO AVOID ALLOWING SEDIMENTS TO ENTER THE STORM DRAIN SYSTEM DURING CONSTRUCTION. BOTH EXISTING AND PROPOSED CATCH BASIN INLETS SHALL BE PROTECTED DURING CONSTRUCTION BY THE USE SILT SACKS AND/OR TUBULAR BARRIERS AROUND EACH INLET AS NOTED ON THE PLANS. INLET PROTECTION MAY BE REMOVED ONLY AFTER FINISHED AREAS ARE PAVED AND THE VEGETATED SLOPES ARE ESTABLISHED WITH AT LEAST 85–90% OF VIGOROUS PERENNIAL GROWTH.

8. AS APPLICABLE, EROSION CONTROL MESH SHALL BE APPLIED IN ACCORDANCE WITH THE PLANS OVER ALL FINISHED SEEDED AREAS AS SPECIFIED ON THE DESIGN PLANS.

9. AT A MINIMUM, ALL TUBULAR BARRIERS AND FILTER FABRIC SHALL REMAIN IN PLACE UNTIL SEEDINGS OR PLANTINGS HAVE BECOME 85–90% ESTABLISHED. THE LOCAL CONSERVATION COMMISSION MUST APPROVE THE REMOVAL OR RELOCATION OF ANY OF THE TUBULAR BARRIERS AND FILTER FABRIC. ONCE THE TUBULAR BARRIERS ARE REMOVED THE AREAS ARE TO BE LOAMED AND SEEDED TO ACHIEVE FULL STABILIZATION.

10. AT THE OWNER'S DISCRETION ADDITIONAL EROSION CONTROL MEASURES MAY BE REQUIRED TO MAINTAIN STABILITY OF EARTHWORKS AND FINISHED GRADED AREAS. THE CONTRACTOR, AT HIS EXPENSE, WILL BE RESPONSIBLE FOR PROVIDING AND INSTALLING ANY ADDITIONAL MEASURES AS SPECIFIED BY THE OWNER. THIS INCLUDES BUT IS NOT LIMITED TO REQUESTS BY MA DEP, THE ENGINEER AND THE LOCAL MUNICIPALITY, AS AUTHORIZED BY THE OWNER. FAILURE TO COMPLY WITH THE OWNER'S DIRECTIONS WILL RESULT IN DISCONTINUATION OF CONSTRUCTION ACTIVITIES.

11. INSPECTIONS AND MONITORING MAINTENANCE MEASURES SHALL BE APPLIED AS NEEDED DURING THE ENTIRE CONSTRUCTION CYCLE. WEEKLY INSPECTIONS SHALL BE HELD THROUGH THE DURATION OF CONSTRUCTION ACTIVITY. WEEKLY INSPECTION REPORTS SHALL BE MAINTAINED BY THE CONTRACTOR AND LOCATED IN THE CONTRACTORS FIELD OFFICE ONSITE. IN ADDITION TO THE NORMAL WEEKLY INSPECTIONS, THE CONTRACTOR SHALL PERFORM AN INSPECTION OF ALL EROSION CONTROL MEASURES AFTER EACH RAINFALL OR RUNOFF EVENT, AND PERFORM THE NECESSARY REPAIRS. THE INSPECTIONS SHALL INCLUDE BUT NOT BE LIMITED TO THE SITE'S DOWN STREAM DISCHARGE POINTS.

12. IF ANY EVIDENCE OF SEDIMENTATION IS OBSERVED AT THE STORMWATER MANAGEMENT AREA INLETS, THE CONTRACTOR SHALL, AT HIS OWN EXPENSE, PROVIDE A PLAN TO THE ENGINEER TO REMOVE ANY ACCUMULATED SEDIMENT IN THESE AREAS. THE CONTRACTOR SHALL ALSO IMMEDIATELY PROVIDE ADDITIONAL ON SITE EROSION AND SEDIMENTATION CONTROL MEASURES TO PREVENT FURTHER DEGRADATION OF THE AREA.

13. FOLLOWING THE TEMPORARY OR FINAL SEEDINGS, THE CONTRACTOR SHALL INSPECT THE WORK AREA SEMI–MONTHLY TO ENSURE THE AREAS HAVE A MINIMUM OF 85–90% VEGETATED VIGOROUS GROWTH. RE–SEEDING SHALL BE CARRIED OUT BY THE CONTRACTOR WITH FOLLOW UP INSPECTIONS IN THE EVENT OF ANY FAILURES UNTIL VEGETATION IS ADEQUATELY ESTABLISHED.

14. CONTRACTOR & ALL SITE SUBCONTRACTORS SHALL BE FAMILIAR WITH & FOLLOW ALL APPROVED PERMITS AND CONDITIONS. CONTRACTOR SHALL MAINTAIN A COPY OF ALL APPROVED PERMITS ONSITE. ALL CONDITIONS & RECOMMENDATIONS WITHIN THE APPROVED PERMITS SHALL BE COMPLETED.

15. ALL EROSION MEASURES SHALL BE INSTALLED PRIOR TO CONSTRUCTION AND SHALL BE ADEQUATE TO MAINTAIN SEDIMENT ON SITE. ANY MODIFICATIONS SHALL BE INSTALLED AS DIRECTED BY THE ENGINEER OR THE LOCAL MUNICIPALITY.

16. EROSION AND SEDIMENTATION CONTROL MEASURES SHALL BE MAINTAINED DURING CONSTRUCTION, AND SHALL REMAIN IN PLACE UNTIL ALL SITE WORK IS COMPLETE AND GROUND COVER IS ESTABLISHED.

17. TOP OF STOCKPILES SHALL BE COVERED IN SUCH MANNER THAT STORMWATER DOES NOT INFILTRATE THE MATERIALS AND THEREBY RENDER THE SAME UNSUITABLE FOR FILL USE.

EROSION & SEDIMENTATION CONTROL NOTES (CONTINUED):

18. ALL DISTURBED OR EXPOSED AREAS SUBJECT TO EROSION SHALL BE STABILIZED WITH MULCH OR SEEDED FOR TEMPORARY VEGETATIVE COVER. NO AREA, SUBJECT TO EROSION SHALL BE LEFT DISTURBED AND UNSTABILIZED FOR PERIODS LONGER THAN IS ABSOLUTELY NECESSARY TO CARRY OUT THAT PORTION OF THE CONSTRUCTION WORK OR SIX MONTHS AFTER SOIL HAS BEEN DISTURBED WHICHEVER IS LESS.

19. CULVERT/PIPE INLETS AND OUTFALLS SHALL BE PROTECTED BY TUBULAR BARRIER FILTERS AND STONE CHECK DAMS UNTIL DISTURBED AREAS ARE PERMANENTLY STABILIZED.

20. TUBULAR BARRIER DIKES SHALL BE CONSTRUCTED AT ALL EXISTING & PROPOSED CATCH BASINS. NO SEDIMENTATION SHALL ENTER THE ON–SITE OR OFF–SITE DRAINAGE SYSTEMS AT ANY TIME.

21. ALL EROSION CONTROL MEASURES SHALL BE ROUTINELY INSPECTED, CLEANED AND REPAIRED OR REPLACED AS NECESSARY THROUGHOUT ALL PHASES OF CONSTRUCTION. IN ADDITION, INSPECTIONS SHALL TAKE PLACE WEEKLY AND BEFORE AND AFTER EACH RAINFALL EVENT.

22. ALL PROPOSED SLOPES STEEPER THAN 3:1 SHALL BE STABILIZED WITH JUTE MESH AND PROTECTED FROM EROSION UNTIL WORK IS COMPLETE AND GROUND COVER IS ESTABLISHED.

23. THE CONTRACTOR SHALL KEEP ON SITE AT ALL TIMES ADDITIONAL TUBULAR BARRIERS FOR INSTALLATION AT THE DIRECTION OF THE ENGINEER OR THE TOWN ENGINEER TO MITIGATE ANY EMERGENCY CONDITION.

24. AS CONSTRUCTION DISTURBANCE IS LESS THAN 1 ACRE, A NATIONAL POLLUTANT DISCHARGE ELIMINATION SYSTEM (NPDES) CONSTRUCTION GENERAL PERMIT NOI, AND STORM WATER POLLUTION PREVENTION PLAN (SWPPP) WILL NOT NEED TO BE SUBMITTED TO THE EPA.

25. OWNER AND CONTRACTOR ARE RESPONSIBLE FOR COMPLIANCE WITH THE CONSTRUCTION GENERAL PERMIT NOI. WEEKLY SWPPP INSPECTION REPORTS TO BE PERFORMED BY CONTRACTOR. COPIES OF ALL SWPPP INSPECTION REPORTS SHALL BE PROVIDED TO THE LOCAL MUNICIPALITY, EPA, DEP, OR ANY OTHER AUTHORITY REQUESTING WITHIN 3 DAYS OF EACH INSPECTION.

26. APPLICABLE WORK AND MATERIALS SHALL COMPLY WITH ALL LOCAL, MA DEP, EPA CONSTRUCTION GENERAL PERMIT STANDARDS. ALL CONSTRUCTION SHALL CONFORM TO THE APPLICABLE SITE PLAN REGULATIONS FROM THE LOCAL AND USDA SOIL CONSERVATION SERVICE VEGETATIVE PRACTICES IN SITE DEVELOPMENT.

27. A WATERING TRUCK SHALL BE USED TO PERIODICALLY SPRINKLE CONSTRUCTION AREAS IN ORDER TO KEEP THE LEVEL OF DUST TO A MINIMUM DURING THE DRY MONTHS AND AS REQUIRED.

28. IF DEWATERING IS NECESSARY IT SHALL ONLY BE COMPLETED AS FOLLOWS: THE DISCHARGE SHALL BE STOPPED IMMEDIATELY IF THE RECEIVING AREA SHOWS ANY SIGN OF INSTABILITY OR EROSION. ALL CHANNELS, SWALES, AND DITCHES DUG FOR DISCHARGING WATER FROM THE EXCAVATED AREA SHALL BE STABLE PRIOR TO DIRECTING DISCHARGE TO THEM. IF A CONSTRUCTION EQUIPMENT BUCKET IS USED, IT SHALL EMPTY THE MATERIAL TO A STABLE AREA. NO DEWATERING SHALL OCCUR DURING PERIODS OF INTENSE, HEAVY RAIN. FLOW TO THE SEDIMENT REMOVAL STRUCTURE SHALL NOT EXCEED THE STRUCTURE'S CAPACITY TO SETTLE AND FILTER FLOW OR ITS VOLUME CAPACITY. WHENEVER POSSIBLE, THE DISCHARGE FROM THE SEDIMENT REMOVAL STRUCTURE SHALL DRAIN TO A WELL–VEGETATED BUFFER BY SHEET FLOW WHILE MAXIMIZING THE DISTANCE TO THE NEAREST WATER RESOURCE AND MINIMIZING THE SLOPE OF THE BUFFER AREA. THERE SHALL BE NO DIRECT DISCHARGE TO EXISTING WETLANDS OR STREAMS. ALL DISCHARGE SHALL BE IN COMPLIANCE WITH STATE, LOCAL, AND FEDERAL REQUIREMENTS.

29. INITIATE STABILIZATION OF EXPOSED AREAS IMMEDIATELY IF CONSTRUCTION WORK TEMPORARILY OR PERMANENTLY CEASES.

30. ALL DISCHARGES FROM POLLUTION SOURCES ARE PROHIBITED ONSITE SUCH AS FUELS, WASTEWATER FROM WASH OUT OF CONCRETE, WASTEWATER FROM CLEAN OUT OF PAINTS, FORM RELEASE OILS, SOLVENTS, ADHESIVES, CURING COMPOUNDS, POLLUTANTS USED FOR MAINTENANCE OF VEHICLES AND EQUIPMENT, SOAPS & SOLVENTS, TOXIC OR HAZARDOUS SUBSTANCES, CHEMICALS AND OILS. IF A POLLUTANT IS DISCHARGED IT NEEDS TO BE IMMEDIATELY CLEANED UP BY REMOVING THE CHEMICAL AND AFFECTED SOIL OR AREA OF SPILL FROM THE SITE IN ACCORDANCE WITH BOTH THE MANUFACTURER RECOMMENDATIONS, FEDERAL, STATE, AND LOCAL REQUIREMENTS. DO NOT HOSE DOWN AND SPREAD SPILLED ITEM. ALL CHEMICALS USED ON THE SITE SHALL BE IN LEAK–PROOF CONTAINERS STORED AWAY FROM WETLANDS, SURFACE WATERS, STORMWATER INLETS, AND DRAINAGE MEASURES. SPILL KITS SHALL BE AVAILABLE ONSITE FOR EMERGENCY USE. THERE SHALL BE A SECONDARY CONTAINMENT MEASURE OF ALL CHEMICALS IN ADDITION TO SPILL–PROOF CONTAINERS.

31. PRIOR TO COMMENCEMENT OF CONSTRUCTION, APPLICABLE CONTRACTOR PERSONNEL MUST HAVE AN UNDERSTANDING OF THE EPA CONSTRUCTION GENERAL PERMIT REQUIREMENTS AND THEIR SPECIFIC RESPONSIBILITIES UNDER THE PERMIT. AT A MINIMUM, PERSONNEL MUST BE TRAINED AND UNDERSTAND THE FOLLOWING: LOCATION OF ALL STORMWATER CONTROLS AND HOW TO MAINTAIN THEM, PROCEDURES FOR COMPLYING WITH THE POLLUTION PREVENTION REQUIREMENTS. PROCEDURES FOR CONDUCTING INSPECTIONS, RECORDING FINDINGS, AND TAKING CORRECTIVE ACTION.

32. ALL SEDIMENT TRACKED ONTO ROADWAYS MUST BE REMOVED AT END OF EACH WORK DAY.

33. ALL USE OF CATIONIC TREATMENT CHEMICALS (EXAMPLES INCLUDE POLYMERS, CHITOSAN, CATIONIC PAM, FLOCCULANTS OR OTHER CHEMICAL UTILIZED FOR STABILIZATION) ARE PROHIBITED. IF ALL OTHER AVAILABLE STABILIZATION MEASURES ARE NOT POSSIBLE AND USE OF CATIONIC CHEMICALS IS ABSOLUTELY NECESSARY THE CONTRACTOR WILL NEED TO CONTACT THE EPA NEW ENGLAND OFFICE IN WRITING FOR APPROVAL AND SPECIFIC REQUIREMENTS (MAXIMUM DOSAGE RATE, RESIDUAL TESTING, SPECIFIC LIMITATIONS, ETC) PRIOR TO USE.

34. IF USING NON–VEGETATIVE STABILIZATION MEASURES, IT MUST BE COMPLETED NO LATER THAN 14 DAYS AFTER INITIATING STABILIZATION. ALL AREAS OF EXPOSED SOILS MUST BE COVERED.

35. INSPECTIONS OF EROSION CONTROL MEASURES SHALL BE AT LEAST ONCE EVERY 7 DAYS BY THE CONTRACTOR. AT A MINIMUM INSPECTIONS SHALL INCLUDE ALL DISTURBED AREAS, ALL STORMWATER CONTROLS AND POLLUTION PREVENTION MEASURES, ALL LOCATIONS WHERE STABILIZATION MEASURES HAVE BEEN IMPLEMENTED, EQUIPMENT AND MATERIAL STORAGE AREAS, ALL AREAS WHERE STORMWATER FLOWS AND ALL POINTS OF DISCHARGE. WHEN CORRECTIVE ACTIONS ARE REQUIRED, THE CONTRACTOR MUST IMMEDIATELY TAKE ALL STEPS TO PREVENT POLLUTANT DISCHARGES UNTIL A PERMANENT SOLUTION IS IMPLEMENTED. AS NECESSARY NEW OR MODIFIED CONTROLS MUST BE INSTALLED AND OPERATIONAL, THE REPAIR MUST BE COMPLETED WITHIN 7 DAYS FROM THE TIME OF DISCOVERY. WITHIN 24 HOURS OF A TRIGGERING CONDITION OCCURRING THAT REQUIRES A CORRECTIVE ACTION, A CORRECTIVE ACTION REPORT MUST BE COMPLETED.

APPROVED BY:
TOWN OF LEXINGTON PLANNING BOARD

DATE: _____

THIS PLAN IS SUBJECT TO A COVENANT

DATED _____

THIS PLAN IS SUBJECT TO A CERTIFICATE OF ACTION DATED _____

THIS PLAN IS SUBJECT TO A SPECIAL PERMIT

DATED _____

I _____ TOWN CLERK OF THE TOWN OF LEXINGTON, MASSACHUSETTS HEREBY CERTIFY THAT THE NOTICE OF APPROVAL OF THIS PLAN HAS BEEN RECEIVED AND RECORDED AT THIS OFFICE AND NO NOTICE OF APPEAL WAS RECEIVED DURING THE TWENTY DAYS NEXT AFTER SUCH RECEIPT AND RECORDING OF SAID NOTICE.

TOWN CLERK _____ DATE _____

COMMONWEALTH OF MASSACHUSETTS
CARLTON M. QUINN
CIVIL
No. 49923
REGISTERED PROFESSIONAL ENGINEER

5.18.22

PROFESSIONAL ENGINEER FOR
ALLEN & MAJOR ASSOCIATES, INC.

REV	DATE	DESCRIPTION

APPLICANT\OWNER:
12-18 HARTWELL OWNER, LLC. &
24 HARTWELL OWNER, LLC
C/O GREATLAND REALTY PARTNERS
ONE FEDERAL STREET, SUITE 1810
BOSTON, MA 02110

PROJECT:
DEFINITIVE
NON-RESIDENTIAL SUBDIVISION
12-18 & 24 HARWELL AVENUE
LEXINGTON, MA

PROJECT NO.	3021-02	DATE ISSUED:	5-18-2022
SCALE:	NONE	DWG. NAME:	CIVIL
DESIGNED BY:	DMR/SJL	CHECKED BY:	CMQ

PREPARED BY:

ALLEN & MAJOR ASSOCIATES, INC.
civil engineering ◆ land surveying
environmental consulting ◆ landscape architecture
www.allenmajor.com
100 COMMERCE WAY, SUITE 5
WOBURN MA 01801
TEL: (781) 935-6889
FAX: (781) 935-2896
WOBURN, MA ◆ LAKEVILLE, MA ◆ MANCHESTER, NH

THIS DRAWING HAS BEEN PREPARED IN DIGITAL FORMAT. CLIENT/CLIENT'S REPRESENTATIVE OR CONSULTANTS MAY BE PROVIDED COPIES OF DRAWINGS AND SPECIFICATIONS FOR HIS/HER INFORMATION AND/OR SPECIFIC USE ON THIS PROJECT. DUE TO THE POTENTIAL THAT THE PROVIDED INFORMATION MAY BE MODIFIED UNINTENTIONALLY OR OTHERWISE, ALLEN & MAJOR ASSOCIATES, INC. MAY REMOVE ALL INDICATION OF THE DOCUMENT'S AUTHORSHIP ON THE DIGITAL MEDIA. PRINTED REPRESENTATIONS OR PORTABLE DOCUMENT FORMAT OF THE DRAWINGS AND SPECIFICATIONS ISSUED SHALL BE THE ONLY RECORD COPIES OF ALLEN & MAJOR ASSOCIATES, INC.'S WORK PRODUCT.

DRAWING TITLE: ABBREVIATIONS & NOTES

SHEET No. C-002

Copyright©2022 Allen & Major Associates, Inc.
All Rights Reserved

N:\PROJECTS\3021-02\CIVIL\DRAWINGS\CURRENT\DEFINITIVE SUBDIVISION\C-3021-01_ABBREVIATIONS & NOTES1.DWG

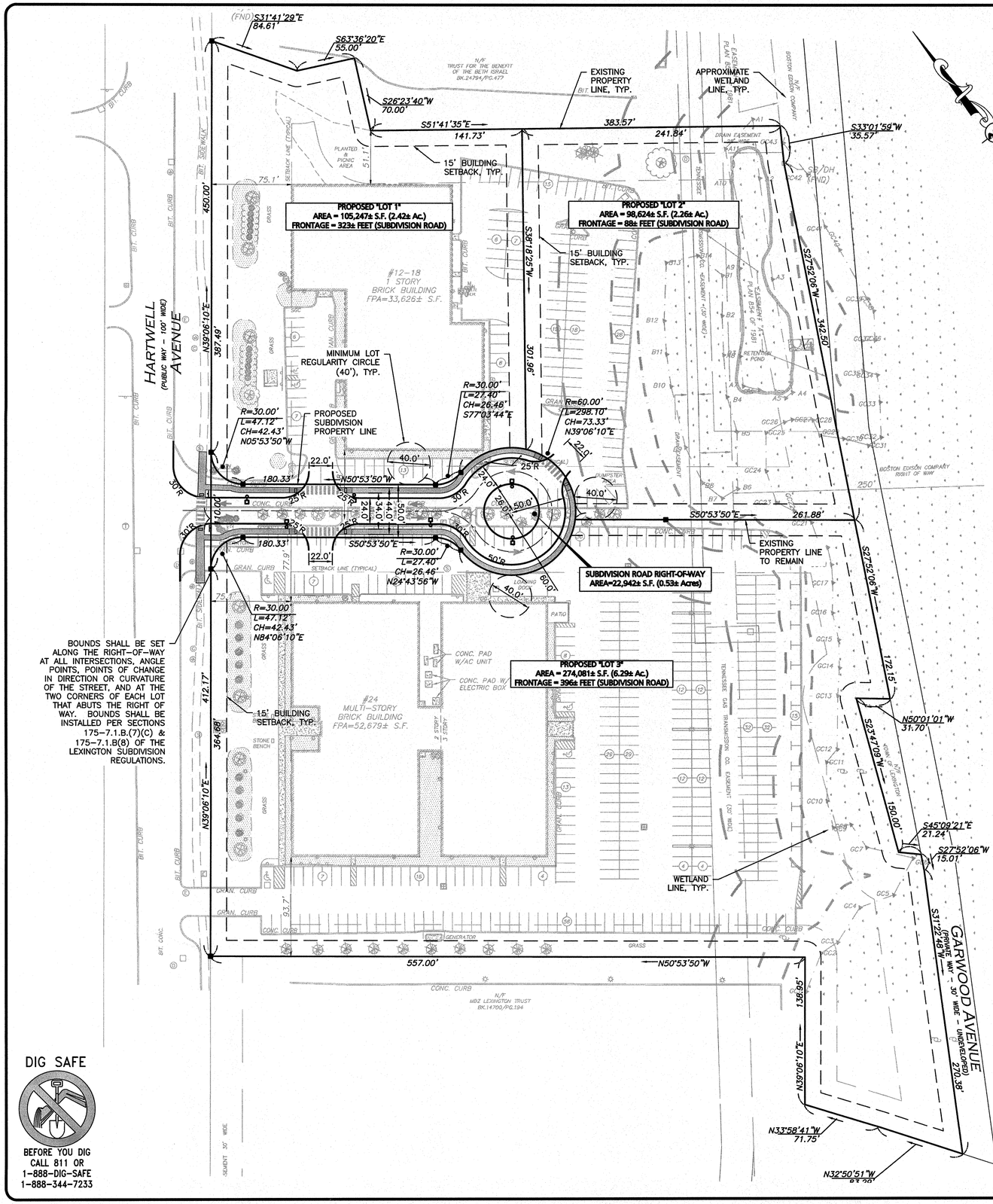

LEGEND

PROP. PROPERTY LINE	
SIGN	
CURB	
TRAFFIC ARROWS	
SIDEWALK	
ADA ACCESSIBLE RAMP	
SETBACK LINE	
BITUMINOUS ASPHALT	BIT.
VERTICAL GRANITE CURB	VGC
SLOPED GRANITE CURB	SGC
STONE BOUND (TBS)	■
IRON ROD (TBS)	●

WE HEREBY CERTIFY THAT:

THIS PLAN IS THE RESULT OF AN ACTUAL ON THE GROUND SURVEY PERFORMED ON OR BETWEEN NOVEMBER 29, 2021 AND DECEMBER 7, 2021.

THIS PLAN WAS PREPARED IN ACCORDANCE WITH THE RULES AND REGULATIONS OF THE REGISTERS OF DEEDS DATED JANUARY 1, 1976 AND REVISED JANUARY 12, 1988.

OWNERS OF ADJOINING PROPERTIES ARE SHOWN ACCORDING TO CURRENT TOWN OF LEXINGTON ASSESSOR'S INFORMATION.

THE ABOVE IS CERTIFIED TO THE BEST OF MY PROFESSIONAL KNOWLEDGE, INFORMATION AND BELIEF.

ALLEN & MAJOR ASSOCIATES, INC.

PROFESSIONAL LAND SURVEYOR FOR ALLEN & MAJOR ASSOCIATES, INC. May 18, 2022

COMMONWEALTH OF MASSACHUSETTS NORMAN I. LIPSITZ No.28446 PROFESSIONAL LAND SURVEYOR 5/18/22

GENERAL NOTES

1. PROPERTY LINE AND EXISTING SITE CONDITIONS INFORMATION SHOWN HEREON IS TAKEN FROM A PLAN ENTITLED "ALTA/ACSM LAND TITLE SURVEY – 24 HARTWELL AVENUE IN LEXINGTON, MASSACHUSETTS (MIDDLESEX COUNTY)", DATED MARCH 17, 2010, PREPARED BY BSC GROUP, PREPARED FOR LEXINGTON MANAGEMENT INC., AND PROVIDED TO ALLEN & MAJOR ASSOCIATES BY GREATLAND REALTY TRUST. THE INFORMATION SHOWN IS SUBJECT TO FIELD VERIFICATION AND MAY BE UPDATED AS NEEDED.
2. VERTICAL DATUM IS NAVD 88.
3. THE LOCATIONS OF EXISTING UNDERGROUND UTILITIES ARE SHOWN IN AN APPROXIMATE WAY ONLY AND HAVE NOT BEEN INDEPENDENTLY VERIFIED BY THE OWNER OR ITS REPRESENTATIVE. THE CONTRACTOR SHALL DETERMINE THE EXACT LOCATION OF ALL EXISTING UTILITIES BEFORE COMMENCING WORK, AND AGREES TO BE FULLY RESPONSIBLE FOR ANY AND ALL DAMAGES WHICH MIGHT BE OCCASIONED BY THE CONTRACTOR'S FAILURE TO EXACTLY LOCATE AND PRESERVE ANY AND ALL UNDERGROUND UTILITIES.
4. THE INFORMATION SHOWN ON THIS PLAN IS THE SOLE PROPERTY OF ALLEN & MAJOR ASSOCIATES, INC. ITS INTENDED USE IS TO PROVIDE INFORMATION. ANY ALTERATION, MISUSE, OR RECALCULATION OF INFORMATION OR DATA WITHOUT THE EXPRESSED, WRITTEN CONSENT OF ALLEN & MAJOR ASSOCIATES, INC. IS STRICTLY PROHIBITED.
5. THE PURPOSE OF THIS PLAN IS TO CREATE A SUBDIVISION ROAD AND THREE PROPOSED LOTS, LOTS 1, 2 AND LOT 3.
6. ALL CURB RADII ARE TO BE 3' UNLESS OTHERWISE NOTED.
7. ABBREVIATION "NR" SHALL SIGNIFY NO REQUIREMENT WITH REGARDS TO ZONING DIMENSIONAL REQUIREMENTS.
8. PROPOSED WAY INCORPORATES A 50' WIDE RIGHT-OF-WAY, A 24' WIDE PAVED DRIVEWAY AND A 60' RADIUS CUL-DE-SAC BULB.
9. CONSTRUCTION OF THE PROPOSED ROADWAY SHALL CONFORM TO SECTION 175-7.2 OF THE LEXINGTON SUBDIVISION REGULATIONS. IT IS INTENDED FOR THE PROPOSED ROADWAY TO BE AN ACCEPTED WAY.
10. PER SECTION 4.2.2 OF CH. 135, THE TOWN OF LEXINGTON ZONING BYLAWS, "LOT REGULARITY. NO STRUCTURE MAY BE ERECTED ON ANY LOT THAT DOES NOT HAVE AN AREA IN WHICH A CIRCLE, THE DIAMETER OF WHICH IS 80% OF THE MINIMUM LOT FRONTAGE, TANGENT TO THE LOT FRONTAGE AND WITHIN ALL OTHER LOT LINES, MAY BE LOCATED." AS THE REQUIRED FRONTAGE IN THE CM DISTRICT IS 50', 80% SHALL BE TAKEN AS 40' DIAMETER CIRCLES, AS SHOWN ON THIS LOTTING PLAN. ALL PROPOSED LOTS MEET THE REQUIREMENTS OF 4.2.2.
11. CONSTRUCTION OF THE PROPOSED ROADWAY SHALL CONFIRM TO 175.2, STREETS AND RIGHTS=OF-WAY. THE PROPOSED STREET INTENDED TO BE A PRIVATE WAY.
12. BOUNDS SHALL BE SET ALONG THE RIGHT-OF-WAY AT ALL INTERSECTIONS, ANGLE POINTS, POINTS OF CHANGE IN DIRECTION OR CURVATURE OF THE STREET, AND AT THE TWO CORNERS OF EACH LOT THAT ABUTS THE RIGHT OF WAY. BOUNDS SHALL BE INSTALLED PER SECTIONS 175-7.1.B.(7)(C) & 175-7.1.B(8) OF THE LEXINGTON SUBDIVISION REGULATIONS.

ZONING SUMMARY TABLE
COMMERCIAL MANUFACTURING ZONING DISTRICT & TRANSPORTATION MANAGEMENT OVERLAY (TMO) DISTRICT

ITEM	REQUIRED ZONING (CM)	PROPOSED LOT 1	PROPOSED LOT 2	PROPOSED LOT 3	PROPOSED SUBDIVISION ROAD
MINIMUM LOT AREA	20,000 S.F.(2) (0.46 Ac.)	105,247± S.F. (2.42± Ac.)	98,624± S.F. (2.26± Ac.)	274,081± S.F. (6.29± Ac.)	22,942± S.F. (0.53± Ac.)
MINIMUM LOT FRONTAGE(1)	50'(2)	323'	88'	396'	N/A
MINIMUM FRONT YARD	NR	32.2'	N/A(3)	39.5'	N/A
MINIMUM SIDE YARD	15'(2)	75.1'	N/A(3)	75.1'	N/A
MINIMUM REAR YARD	15'(2)	51.1'	N/A(3)	93.7'	N/A
MINIMUM SIDE & REAR YARD(4) ADJACENT TO RES. DISTRICT	50'(2)	N/A(3)	N/A(3)	N/A	N/A
MAXIMUM FLOOR AREA RATIO	NR	NR	N/A(3)	NR	N/A
MAXIMUM SITE COVERAGE	NR	NR	N/A(3)	NR	N/A
MAXIMUM BUILDING STORIES(5)	NR	1	N/A(3)	3	N/A
MAXIMUM BUILDING HEIGHT (INCLUDES ACCESSORY BLDGS)	115'	15.1'	N/A(3)	39.0'	N/A

NOTES:

1.) LOT FRONTAGE IS DEFINED IN THE LEXINGTON ZONING BYLAWS AS "THE CONTINUOUS PORTION OF THE LINE SEPARATING A LOT FROM A STREET TO WHICH THE OWNER OF THE LOT CAN PROVIDE THE PHYSICAL ACCESS TO A PRINCIPAL BUILDING ON THE LOT, IN COMPLIANCE WITH APPLICABLE BYLAWS, REGULATIONS OR LAWS, FOR MOTOR VEHICLES TO REACH REQUIRED OFF-STREET PARKING SPACES OR LOADING BAYS, AND FOR EMERGENCY SERVICES SUCH AS FIRE PROTECTIONS OR AMBULANCE SERVICE, AND FOR OTHER VEHICLES TO GAIN ACCESS TO THE PRINCIPAL BUILDING FOR DELIVERIES, SUCH AS MAIL."

2.) THIS LIMIT MAY BE WAIVED BY SPECIAL PERMIT.

3.) NO BUILDING CURRENTLY EXISTS OR IS PROPOSED ON LOT 2 AS PART OF THIS DEFINITIVE SUBDIVISION.

4.) PROJECT SITE IS NOT ADJACENT TO RESIDENTIAL ZONING DISTRICTS.

5.) EXISTING BUILDINGS ARE NOT PUBLIC NOR INSTITUTIONAL, AND THEREFORE CONSIDERED AS "OTHER BUILDINGS" PER ZONING DIMENSIONAL TABLE.

6.) PER SECTION 135 OF THE TOWN OF LEXINGTON, ZONING BYLAWS DIMENSIONAL REGULATIONS ZONING SCHEDULE, "NR" SHALL MEAN "NO REQUIREMENT".

GRAPHIC SCALE

50 0 25 50 100 200

(IN FEET)
1 inch = 50 ft.

APPROVED BY:
TOWN OF LEXINGTON PLANNING BOARD

DATE: _____

THIS PLAN IS SUBJECT TO A COVENANT

DATED _____

THIS PLAN IS SUBJECT TO A CERTIFICATE OF

ACTION DATED _____

THIS PLAN IS SUBJECT TO A SPECIAL PERMIT

DATED _____

I _____ TOWN CLERK OF THE TOWN OF LEXINGTON, MASSACHUSETTS HEREBY CERTIFY THAT THE NOTICE OF APPROVAL OF THIS PLAN HAS BEEN RECEIVED AND RECORDED AT THIS OFFICE AND NO NOTICE OF APPEAL WAS RECEIVED DURING THE TWENTY DAYS NEXT AFTER SUCH RECEIPT AND RECORDING OF SAID NOTICE.

TOWN CLERK _____ DATE _____

COMMONWEALTH OF MASSACHUSETTS CARLTON M. QUINN CIVIL No.49923 REGISTERED PROFESSIONAL ENGINEER 5.18.22

PROFESSIONAL ENGINEER FOR
ALLEN & MAJOR ASSOCIATES, INC.

REV	DATE	DESCRIPTION

APPLICANT\OWNER:
12-18 HARTWELL OWNER, LLC. &
24 HARTWELL OWNER, LLC
C/O GREATLAND REALTY PARTNERS
ONE FEDERAL STREET, SUITE 1810
BOSTON, MA 02110

PROJECT:
DEFINITIVE NON-RESIDENTIAL SUBDIVISION
12-18 & 24 HARWELL AVENUE
LEXINGTON, MA

PROJECT NO.	3021-02	DATE ISSUED:	5-18-2022
SCALE:	1" = 50'	DWG. NAME:	CIVIL
DESIGNED BY:	DMR/SJL	CHECKED BY:	CMQ

PREPARED BY:

ALLEN & MAJOR ASSOCIATES, INC.
civil engineering ◆ land surveying
environmental consulting ◆ landscape architecture
www.allenmajor.com
100 COMMERCE WAY, SUITE 5
WOBURN MA 01801
TEL: (781) 935-6889
FAX: (781) 935-2896
WOBURN, MA ◆ LAKEVILLE, MA ◆ MANCHESTER, NH

THIS DRAWING HAS BEEN PREPARED IN DIGITAL FORMAT. CLIENT/CLIENT'S REPRESENTATIVE OR CONSULTANTS MAY BE PROVIDED COPIES OF DRAWINGS AND SPECIFICATIONS FOR HIS/HER INFORMATION AND/OR SPECIFIC USE ON THIS PROJECT. DUE TO THE POTENTIAL THAT THE PROVIDED INFORMATION MAY BE MODIFIED UNINTENTIONALLY OR OTHERWISE, ALLEN & MAJOR ASSOCIATES, INC. MAY REMOVE ALL INDICATION OF THE DOCUMENT'S AUTHORSHIP ON THE DIGITAL MEDIA. PRINTED REPRESENTATIONS OR PORTABLE DOCUMENT FORMAT OF THE DRAWINGS AND SPECIFICATIONS ISSUED SHALL BE THE ONLY RECORD COPIES OF ALLEN & MAJOR ASSOCIATES, INC.'S WORK PRODUCT.

DRAWING TITLE:
PROPERTY RIGHTS & DIMENSIONAL STANDARDS PLAN

Copyright©2022 Allen & Major Associates, Inc.
All Rights Reserved

SHEET No.
C-102

N:\PROJECTS\3021-02\CIVIL\DRAWINGS\CURRENT\DEFINITIVE SUBDIVISION\C-3021-02_LAYOUT & MATERIALS.DWG

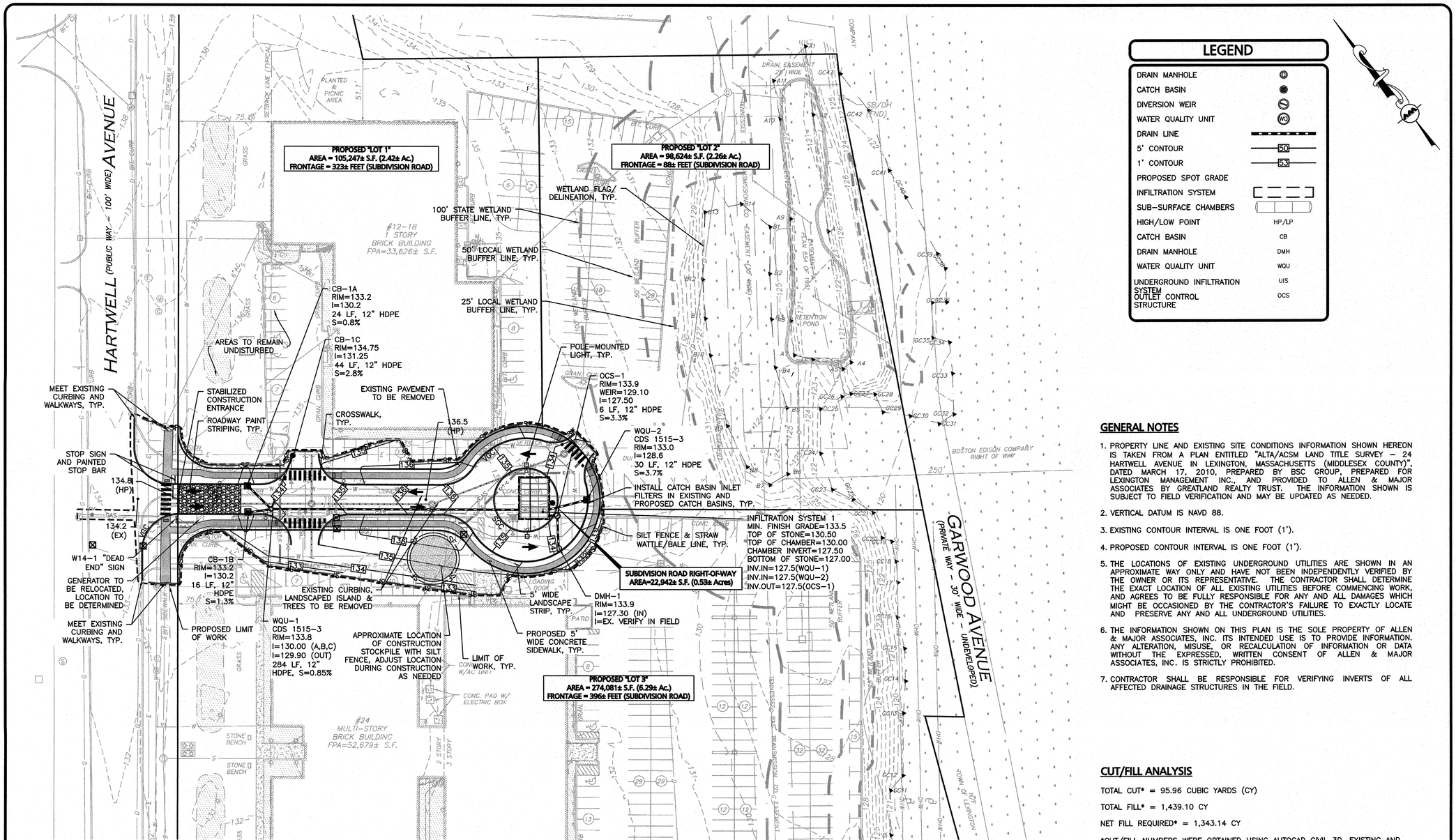

LEGEND

DRAIN MANHOLE	
CATCH BASIN	
DIVERSION WEIR	
WATER QUALITY UNIT	WQ
DRAIN LINE	
5' CONTOUR	50
1' CONTOUR	53
PROPOSED SPOT GRADE	
INFILTRATION SYSTEM	
SUB-SURFACE CHAMBERS	
HIGH/LOW POINT	HP/LP
CATCH BASIN	CB
DRAIN MANHOLE	DMH
WATER QUALITY UNIT	WQU
UNDERGROUND INFILTRATION SYSTEM	UIS
OUTLET CONTROL STRUCTURE	OCS

GENERAL NOTES

1. PROPERTY LINE AND EXISTING SITE CONDITIONS INFORMATION SHOWN HEREON IS TAKEN FROM A PLAN ENTITLED "ALTA/ACSM LAND TITLE SURVEY – 24 HARTWELL AVENUE IN LEXINGTON, MASSACHUSETTS (MIDDLESEX COUNTY)", DATED MARCH 17, 2010, PREPARED BY BSC GROUP, PREPARED FOR LEXINGTON MANAGEMENT INC., AND PROVIDED TO ALLEN & MAJOR ASSOCIATES BY GREATLAND REALTY TRUST. THE INFORMATION SHOWN IS SUBJECT TO FIELD VERIFICATION AND MAY BE UPDATED AS NEEDED.
2. VERTICAL DATUM IS NAVD 88.
3. EXISTING CONTOUR INTERVAL IS ONE FOOT (1').
4. PROPOSED CONTOUR INTERVAL IS ONE FOOT (1').
5. THE LOCATIONS OF EXISTING UNDERGROUND UTILITIES ARE SHOWN IN AN APPROXIMATE WAY ONLY AND HAVE NOT BEEN INDEPENDENTLY VERIFIED BY THE OWNER OR ITS REPRESENTATIVE. THE CONTRACTOR SHALL DETERMINE THE EXACT LOCATION OF ALL EXISTING UTILITIES BEFORE COMMENCING WORK, AND AGREES TO BE FULLY RESPONSIBLE FOR ANY AND ALL DAMAGES WHICH MIGHT BE OCCASIONED BY THE CONTRACTOR'S FAILURE TO EXACTLY LOCATE AND PRESERVE ANY AND ALL UNDERGROUND UTILITIES.
6. THE INFORMATION SHOWN ON THIS PLAN IS THE SOLE PROPERTY OF ALLEN & MAJOR ASSOCIATES, INC. ITS INTENDED USE IS TO PROVIDE INFORMATION. ANY ALTERATION, MISUSE, OR RECALCULATION OF INFORMATION OR DATA WITHOUT THE EXPRESSED, WRITTEN CONSENT OF ALLEN & MAJOR ASSOCIATES, INC. IS STRICTLY PROHIBITED.
7. CONTRACTOR SHALL BE RESPONSIBLE FOR VERIFYING INVERTS OF ALL AFFECTED DRAINAGE STRUCTURES IN THE FIELD.

CUT/FILL ANALYSIS

TOTAL CUT* = 95.96 CUBIC YARDS (CY)

TOTAL FILL* = 1,439.10 CY

NET FILL REQUIRED* = 1,343.14 CY

*CUT/FILL NUMBERS WERE OBTAINED USING AUTOCAD CIVIL 3D. EXISTING AND PROPOSED CONTOURS SHOWN WERE DIGITIZED AND A VOLUME ANALYSIS PERFORMED.

STANDARD SIGNAGE TABLE:

MUTCD NUMBER	SIGN	SIZE (MIN)	MOUNTING HEIGHT	DESCRIPTION (3)	RETRO-FLECTIVE
W14-1	DEAD END	24" SIDES	7' – 0"	BLACK ON YELLOW	YES

DIG SAFE

BEFORE YOU DIG
CALL 811 OR
1-888-DIG-SAFE
1-888-344-7233

GRAPHIC SCALE

40 0 20 40 80 160

(IN FEET)
1 inch = 40 ft.

APPROVED BY:
TOWN OF LEXINGTON PLANNING BOARD

DATE: _____

THIS PLAN IS SUBJECT TO A COVENANT

DATED _____

THIS PLAN IS SUBJECT TO A CERTIFICATE OF ACTION DATED _____

THIS PLAN IS SUBJECT TO A SPECIAL PERMIT

DATED _____

I _____ TOWN CLERK OF THE TOWN OF LEXINGTON, MASSACHUSETTS HEREBY CERTIFY THAT THE NOTICE OF APPROVAL OF THIS PLAN HAS BEEN RECEIVED AND RECORDED AT THIS OFFICE AND NO NOTICE OF APPEAL WAS RECEIVED DURING THE TWENTY DAYS NEXT AFTER SUCH RECEIPT AND RECORDING OF SAID NOTICE.

TOWN CLERK _____ DATE _____

COMMONWEALTH OF MASSACHUSETTS
CARLTON M. QUINN
CIVIL
No. 49923
REGISTERED PROFESSIONAL ENGINEER
5.18.22

PROFESSIONAL ENGINEER FOR
ALLEN & MAJOR ASSOCIATES, INC.

REV	DATE	DESCRIPTION

APPLICANT\OWNER:
12-18 HARTWELL OWNER, LLC. &
24 HARTWELL OWNER, LLC
C/O GREATLAND REALTY PARTNERS
ONE FEDERAL STREET, SUITE 1810
BOSTON, MA 02110

PROJECT:
DEFINITIVE
NON-RESIDENTIAL SUBDIVISION
12-18 & 24 HARWELL AVENUE
LEXINGTON, MA

PROJECT NO.	3021-02	DATE ISSUED:	5-18-2022
SCALE:	1" = 40'	DWG. NAME:	CIVIL
DESIGNED BY:	DMR/SJL	CHECKED BY:	CMQ

PREPARED BY:

ALLEN & MAJOR ASSOCIATES, INC.
civil engineering ◆ land surveying
environmental consulting ◆ landscape architecture
www.allenmajor.com
100 COMMERCE WAY, SUITE 5
WOBURN MA 01801
TEL: (781) 935-6889
FAX: (781) 935-2896

WOBURN, MA ◆ LAKEVILLE, MA ◆ MANCHESTER, NH

THIS DRAWING HAS BEEN PREPARED IN DIGITAL FORMAT. CLIENT/CLIENT'S REPRESENTATIVE OR CONSULTANTS MAY BE PROVIDED COPIES OF DRAWINGS AND SPECIFICATIONS FOR HIS/HER INFORMATION AND/OR SPECIFIC USE ON THIS PROJECT. DUE TO THE POTENTIAL THAT THE PROVIDED INFORMATION MAY BE MODIFIED UNINTENTIONALLY OR OTHERWISE, ALLEN & MAJOR ASSOCIATES, INC. MAY REMOVE ALL INDICATION OF THE DOCUMENT'S AUTHORSHIP ON THE DIGITAL MEDIA. PRINTED REPRESENTATIONS OR PORTABLE DOCUMENT FORMAT OF THE DRAWINGS AND SPECIFICATIONS ISSUED SHALL BE THE ONLY RECORD COPIES OF ALLEN & MAJOR ASSOCIATES, INC.'S WORK PRODUCT.

DRAWING TITLE: SITE CONSTRUCTION PLAN

SHEET No. C-103

Copyright©2022 Allen & Major Associates, Inc.
All Rights Reserved

N:\PROJECTS\3021-02\CIVIL\DRAWINGS\CURRENT\DEFINITIVE SUBDIVISION\C-3021-02_GRADING & DRAINAGE.DWG

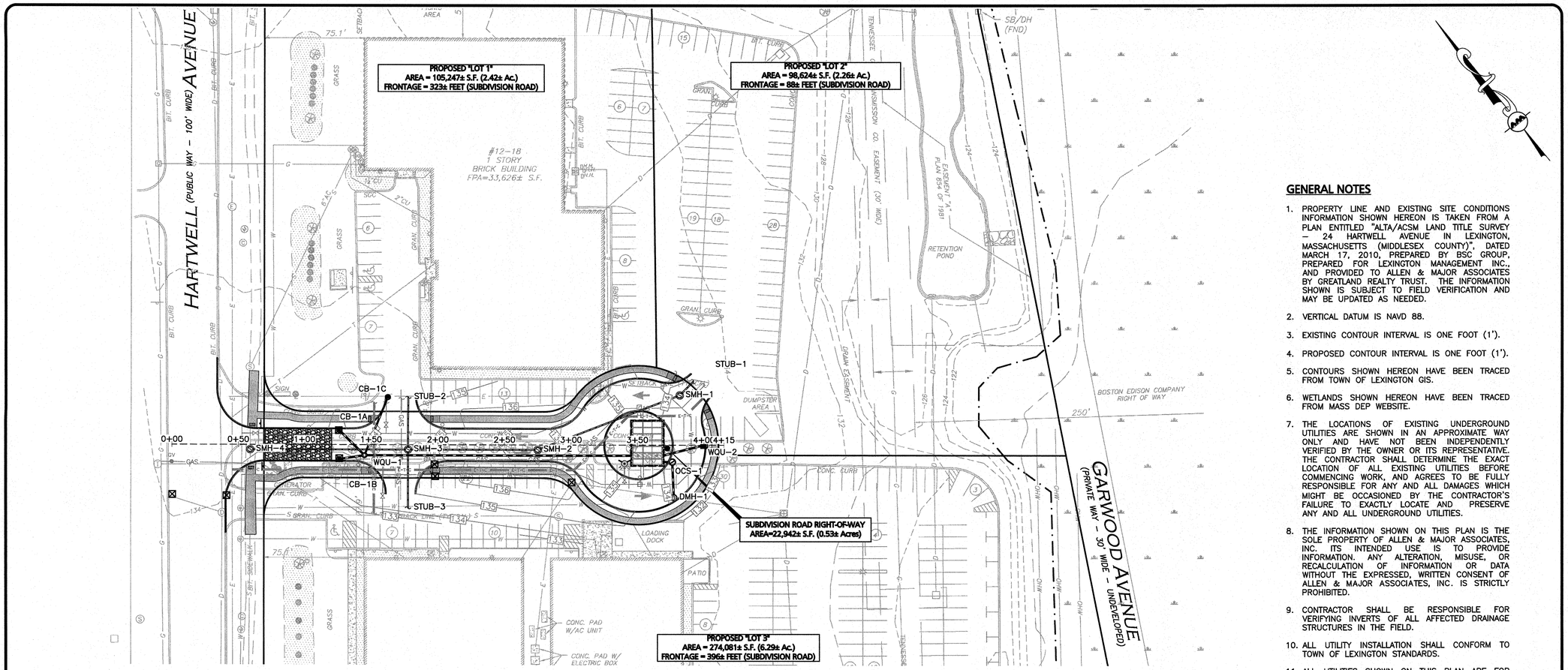

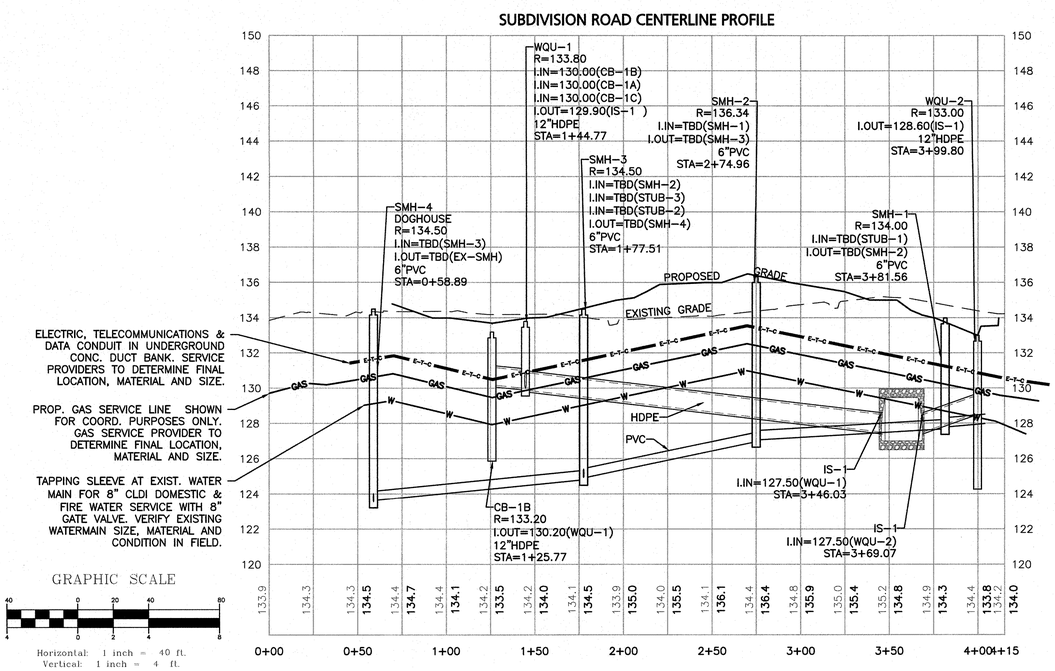

GENERAL NOTES

1. PROPERTY LINE AND EXISTING SITE CONDITIONS INFORMATION SHOWN HEREON IS TAKEN FROM A PLAN ENTITLED "ALTA/ACSM LAND TITLE SURVEY – 24 HARTWELL AVENUE IN LEXINGTON, MASSACHUSETTS (MIDDLESEX COUNTY)", DATED MARCH 17, 2010, PREPARED BY BSC GROUP, PREPARED FOR LEXINGTON MANAGEMENT INC., AND PROVIDED TO ALLEN & MAJOR ASSOCIATES BY GREATLAND REALTY TRUST. THE INFORMATION SHOWN IS SUBJECT TO FIELD VERIFICATION AND MAY BE UPDATED AS NEEDED.
2. VERTICAL DATUM IS NAVD 88.
3. EXISTING CONTOUR INTERVAL IS ONE FOOT (1').
4. PROPOSED CONTOUR INTERVAL IS ONE FOOT (1').
5. CONTOURS SHOWN HEREON HAVE BEEN TRACED FROM TOWN OF LEXINGTON GIS.
6. WETLANDS SHOWN HEREON HAVE BEEN TRACED FROM MASS DEP WEBSITE.
7. THE LOCATIONS OF EXISTING UNDERGROUND UTILITIES ARE SHOWN IN AN APPROXIMATE WAY ONLY AND HAVE NOT BEEN INDEPENDENTLY VERIFIED BY THE OWNER OR ITS REPRESENTATIVE. THE CONTRACTOR SHALL DETERMINE THE EXACT LOCATION OF ALL EXISTING UTILITIES BEFORE COMMENCING WORK, AND AGREES TO BE FULLY RESPONSIBLE FOR ANY AND ALL DAMAGES WHICH MIGHT BE OCCASIONED BY THE CONTRACTOR'S FAILURE TO EXACTLY LOCATE AND PRESERVE ANY AND ALL UNDERGROUND UTILITIES.
8. THE INFORMATION SHOWN ON THIS PLAN IS THE SOLE PROPERTY OF ALLEN & MAJOR ASSOCIATES, INC. ITS INTENDED USE IS TO PROVIDE INFORMATION. ANY ALTERATION, MISUSE, OR RECALCULATION OF INFORMATION OR DATA WITHOUT THE EXPRESSED, WRITTEN CONSENT OF ALLEN & MAJOR ASSOCIATES, INC. IS STRICTLY PROHIBITED.
9. CONTRACTOR SHALL BE RESPONSIBLE FOR VERIFYING INVERTS OF ALL AFFECTED DRAINAGE STRUCTURES IN THE FIELD.
10. ALL UTILITY INSTALLATION SHALL CONFORM TO TOWN OF LEXINGTON STANDARDS.
11. ALL UTILITIES SHOWN ON THIS PLAN ARE FOR GENERAL COORDINATION PURPOSES ONLY. INDIVIDUAL UTILITY PROVIDERS AND MEP ENGINEER SHALL DETERMINE THE EXACT LOCATION IN THE BUILDING & SIZE OF EACH UTILITY & METER.
12. REFER TO GRADING & DRAINAGE PLAN AND UTILITIES PLAN FOR ADDITIONAL INFORMATION.

GRAPHIC SCALE

(IN FEET)
1 inch = ## ft.

DIG SAFE

BEFORE YOU DIG
CALL 811 OR
1-888-DIG-SAFE
1-888-344-7233

N:\PROJECTS\3021-02\CIVIL\DRAWINGS\CURRENT\DEFINITIVE SUBDIVISION\C-3021-02_PROFILE.DWG

APPROVED BY:
TOWN OF LEXINGTON PLANNING BOARD

DATE: _____

THIS PLAN IS SUBJECT TO A COVENANT

DATED _____

THIS PLAN IS SUBJECT TO A CERTIFICATE OF

ACTION DATED _____

THIS PLAN IS SUBJECT TO A SPECIAL PERMIT

DATED _____

I _____ TOWN CLERK OF THE TOWN OF LEXINGTON, MASSACHUSETTS HEREBY CERTIFY THAT THE NOTICE OF APPROVAL OF THIS PLAN HAS BEEN RECEIVED AND RECORDED AT THIS OFFICE AND NO NOTICE OF APPEAL WAS RECEIVED DURING THE TWENTY DAYS NEXT AFTER SUCH RECEIPT AND RECORDING OF SAID NOTICE.

TOWN CLERK _____ DATE _____

COMMONWEALTH OF MASSACHUSETTS
CARLTON M. QUINN
CIVIL
No. 49923
REGISTERED PROFESSIONAL ENGINEER
5.18.22

PROFESSIONAL ENGINEER FOR
ALLEN & MAJOR ASSOCIATES, INC.

REV	DATE	DESCRIPTION

APPLICANT\OWNER:
12-18 HARTWELL OWNER, LLC. &
24 HARTWELL OWNER, LLC
C/O GREATLAND REALTY PARTNERS
ONE FEDERAL STREET, SUITE 1810
BOSTON, MA 02110

PROJECT:
DEFINITIVE
NON-RESIDENTIAL SUBDIVISION
12-18 & 24 HARWELL AVENUE
LEXINGTON, MA

PROJECT NO.	3021-02	DATE ISSUED:	5-18-2022
HORIZONTAL SCALE: VERTICAL SCALE:	1" = 40' 1" = 4'	DWG. NAME:	CIVIL
DESIGNED BY:	DMR/SJL	CHECKED BY:	CMQ

PREPARED BY:

ALLEN & MAJOR ASSOCIATES, INC.
civil engineering ◆ land surveying
environmental consulting ◆ landscape architecture
www.allenmajor.com
100 COMMERCE WAY, SUITE 5
WOBURN MA 01801
TEL: (781) 935-6889
FAX: (781) 935-2896
WOBURN, MA ◆ LAKEVILLE, MA ◆ MANCHESTER, NH

THIS DRAWING HAS BEEN PREPARED IN DIGITAL FORMAT. CLIENT/CLIENT'S REPRESENTATIVE OR CONSULTANTS MAY BE PROVIDED COPIES OF DRAWINGS AND SPECIFICATIONS FOR HIS/HER INFORMATION AND/OR SPECIFIC USE ON THIS PROJECT. DUE TO THE POTENTIAL THAT THE PROVIDED INFORMATION MAY BE MODIFIED UNINTENTIONALLY OR OTHERWISE, ALLEN & MAJOR ASSOCIATES, INC. MAY REMOVE ALL INDICATION OF THE DOCUMENT'S AUTHORSHIP ON THE DIGITAL MEDIA. PRINTED REPRESENTATIONS OR PORTABLE DOCUMENT FORMAT OF THE DRAWINGS AND SPECIFICATIONS ISSUED SHALL BE THE ONLY RECORD COPIES OF ALLEN & MAJOR ASSOCIATES, INC.'S WORK PRODUCT.

DRAWING TITLE:
STREET LAYOUT &
PROFILE PLAN

SHEET No.
C-104

Copyright©2022 Allen & Major Associates, Inc.
All Rights Reserved

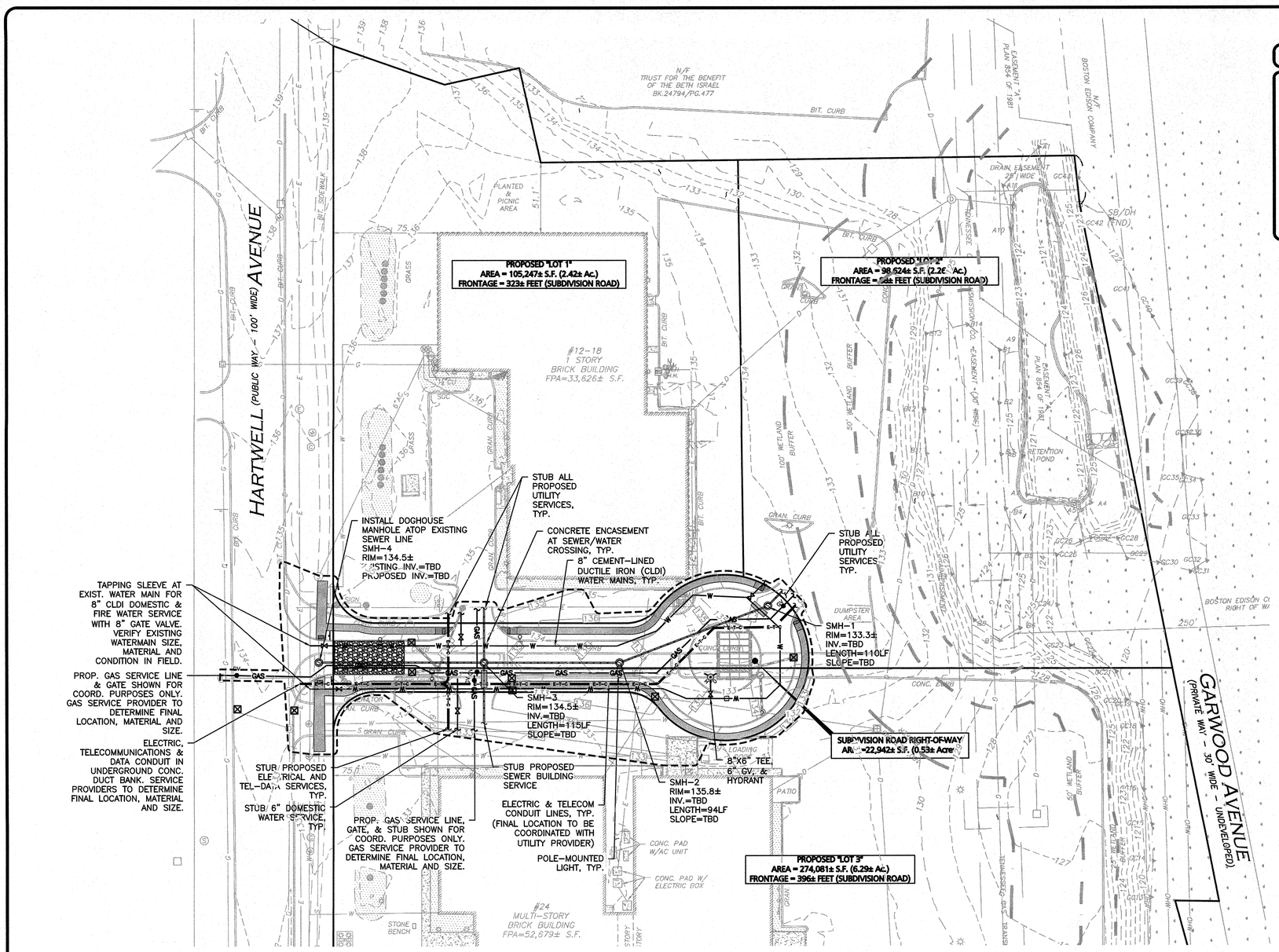

LEGEND

SEWER MANHOLE	S
SEWER LINE	
CONCRETE PIPE ENCASEMENT	
WATER LINE	W
WATER (FIRE SERVICE)	W-F
WATER VALVE	WV
HYDRANT	
GAS LINE	GAS
GAS VALVE	GV
ELEC/TELE/CABLE CONDUIT	E-T-C

GENERAL NOTES

1. EXISTING CONDITIONS BASE PLAN TAKEN FROM A PLAN ENTITLED "ALTA/ACSM LAND TITLE SURVEY – 24 HARTWELL AVENUE IN LEXINGTON, MASSACHUSETTS (MIDDLESEX COUNTY)", DATED MARCH 17, 2021, PREPARED BY BSC GROUP, PREPARED FOR LEXINGTON MANAGEMENT INC., AND PROVIDED TO ALLEN & MAJOR BY GREATLAND REALTY TRUST.
2. VERTICAL DATUM IS NAVD 88.
3. EXISTING CONTOUR INTERVAL IS ONE FOOT (1').
4. PROPOSED CONTOUR INTERVAL IS ONE FOOT (1').
5. THE LOCATIONS OF EXISTING UNDERGROUND UTILITIES ARE SHOWN IN AN APPROXIMATE WAY ONLY AND HAVE NOT BEEN INDEPENDENTLY VERIFIED BY THE OWNER OR ITS REPRESENTATIVE. THE CONTRACTOR SHALL DETERMINE THE EXACT LOCATION OF ALL EXISTING UTILITIES BEFORE COMMENCING WORK, AND AGREES TO BE FULLY RESPONSIBLE FOR ANY AND ALL DAMAGES WHICH MIGHT BE OCCASIONED BY THE CONTRACTOR'S FAILURE TO EXACTLY LOCATE AND PRESERVE ANY AND ALL UNDERGROUND UTILITIES.
6. THE INFORMATION SHOWN ON THIS PLAN IS THE SOLE PROPERTY OF ALLEN & MAJOR ASSOCIATES, INC. ITS INTENDED USE IS TO PROVIDE INFORMATION. ANY ALTERATION, MISUSE, OR RECALCULATION OF INFORMATION OR DATA WITHOUT THE EXPRESSED, WRITTEN CONSENT OF ALLEN & MAJOR ASSOCIATES, INC. IS STRICTLY PROHIBITED.
7. CONTRACTOR SHALL BE RESPONSIBLE FOR VERIFYING INVERTS OF ALL AFFECTED SEWER STRUCTURES IN THE FIELD.
8. ALL UTILITY INSTALLATION SHALL CONFORM TO TOWN OF LEXINGTON STANDARDS.
9. ALL UTILITIES SHOWN ON THIS PLAN ARE FOR GENERAL COORDINATION PURPOSES ONLY. INDIVIDUAL UTILITY PROVIDERS AND MEP ENGINEER SHALL DETERMINE THE EXACT LOCATION IN THE BUILDING & SIZE OF EACH UTILITY & METER.
10. ALL MANHOLE RIM ELEVATIONS SHALL BE AT FINISH GRADE.
11. PER TOWN OF LEXINGTON ALL VALVES AND VALVE BOXES SHALL BE AMERICAN MADE ONLY. ALL VALVES SHALL OPEN RIGHT (CLOCKWISE).
12. PER CHAPTER 175.7.1.B.4.A OF THE CODE OF LEXINGTON ALL NEW UTILITY EASEMENTS SHALL BE A MINIMUM OF 20 FEET WIDE.

DIG SAFE

BEFORE YOU DIG CALL 811 OR 1-888-DIG-SAFE 1-888-344-7233

GRAPHIC SCALE

40 0 20 40 80 160

(IN FEET)
1 inch = 40 ft.

N:\PROJECTS\3021-02\CIVIL\DRAWINGS\CURRENT\DEFINITIVE SUBDIVISION\C-3021-02_UTILITIES.DWG

APPROVED BY:
TOWN OF LEXINGTON PLANNING BOARD

DATE: _____

THIS PLAN IS SUBJECT TO A COVENANT

DATED _____

THIS PLAN IS SUBJECT TO A CERTIFICATE OF ACTION DATED _____

THIS PLAN IS SUBJECT TO A SPECIAL PERMIT

DATED _____

I _____, TOWN CLERK OF THE TOWN OF LEXINGTON, MASSACHUSETTS HEREBY CERTIFY THAT THE NOTICE OF APPROVAL OF THIS PLAN HAS BEEN RECEIVED AND RECORDED AT THIS OFFICE AND NO NOTICE OF APPEAL WAS RECEIVED DURING THE TWENTY DAYS NEXT AFTER SUCH RECEIPT AND RECORDING OF SAID NOTICE:

TOWN CLERK _____ DATE _____

COMMONWEALTH OF MASSACHUSETTS
CARLTON M. QUINN
CIVIL
No. 49923
REGISTERED PROFESSIONAL ENGINEER
5.18.22

PROFESSIONAL ENGINEER FOR ALLEN & MAJOR ASSOCIATES, INC.

REV	DATE	DESCRIPTION

APPLICANT\OWNER:
12-18 HARTWELL OWNER, LLC. &
24 HARTWELL OWNER, LLC
C/O GREATLAND REALTY PARTNERS
ONE FEDERAL STREET, SUITE 1810
BOSTON, MA 02110

PROJECT:
DEFINITIVE
NON-RESIDENTIAL SUBDIVISION
12-18 & 24 HARWELL AVENUE
LEXINGTON, MA

PROJECT NO.	3021-02	DATE ISSUED:	5-18-2022
SCALE:	1" = 40'	DWG. NAME:	CIVIL
DESIGNED BY:	DMR/SJL	CHECKED BY:	CMQ

PREPARED BY:

ALLEN & MAJOR ASSOCIATES, INC.
civil engineering ◆ land surveying
environmental consulting ◆ landscape architecture
www.allenmajor.com
100 COMMERCE WAY, SUITE 5
WOBURN MA 01801
TEL: (781) 935-6889
FAX: (781) 935-2896
WOBURN, MA ◆ LAKEVILLE, MA ◆ MANCHESTER, NH

THIS DRAWING HAS BEEN PREPARED IN DIGITAL FORMAT. CLIENT/CLIENT'S REPRESENTATIVE OR CONSULTANTS MAY BE PROVIDED COPIES OF DRAWINGS AND SPECIFICATIONS FOR HIS/HER INFORMATION AND/OR SPECIFIC USE ON THIS PROJECT. DUE TO THE POTENTIAL THAT THE PROVIDED INFORMATION MAY BE MODIFIED UNINTENTIONALLY OR OTHERWISE, ALLEN & MAJOR ASSOCIATES, INC. MAY REMOVE ALL INDICATION OF THE DOCUMENT'S AUTHORSHIP ON THE DIGITAL MEDIA. PRINTED REPRESENTATIONS OR PORTABLE DOCUMENT FORMAT OF THE DRAWINGS AND SPECIFICATIONS ISSUED SHALL BE THE ONLY RECORD COPIES OF ALLEN & MAJOR ASSOCIATES, INC'S WORK PRODUCT.

DRAWING TITLE: UTILITIES PLAN

SHEET No. C-105

Copyright©2022 Allen & Major Associates, Inc.
All Rights Reserved

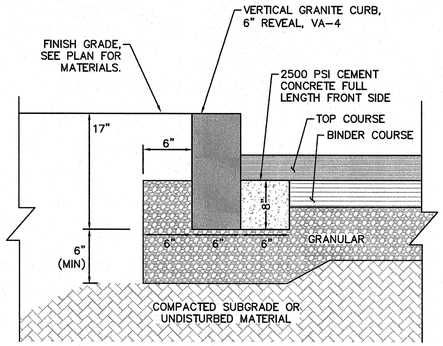

NOTE:
INSTALL PER TOWN STANDARD SPECIFICATIONS.

VERTICAL GRANITE CURBING TYPE VA-4 (VGC) — NOT TO SCALE — (1)

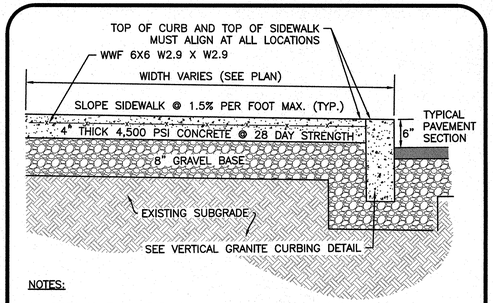

NOTES:

1. SIDEWALK TO HAVE TOOLED JOINTS IN A 5' x 5' (TYP.) GRID WITH EXPANSION JOINTS 15' ON CENTER AND PREMOLDED FILLER
2. TOOLED JOINT 6" FROM FACE OF CURB
3. SEE PLAN FOR ELEVATIONS AT CURB
4. SIDEWALK CROSS SLOPE TO BE 1.5% MAX & SIDEWALK LONGITUDINAL SLOPE TO BE 4.5% MAX, TYP.

CONCRETE SIDEWALK WITH CURB — NOT TO SCALE — (2)

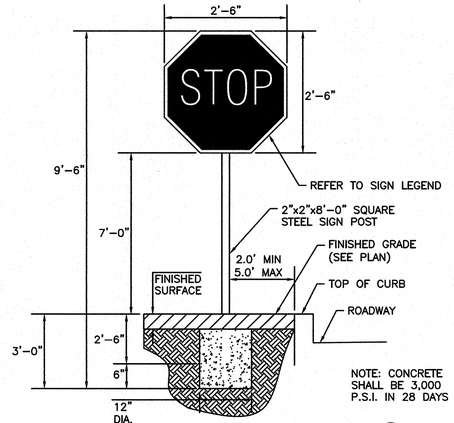

NOTE: CONCRETE SHALL BE 3,000 P.S.I. IN 28 DAYS

STOP SIGN DETAIL — NOT TO SCALE — (3)

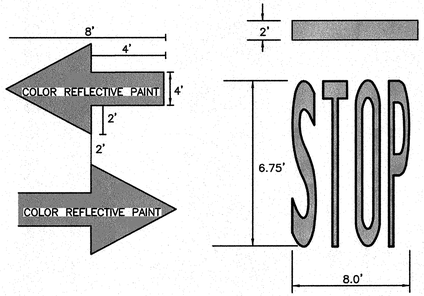

WHITE THERMOPLASTIC LETTERING AND ARROWS — NOT TO SCALE — (4)

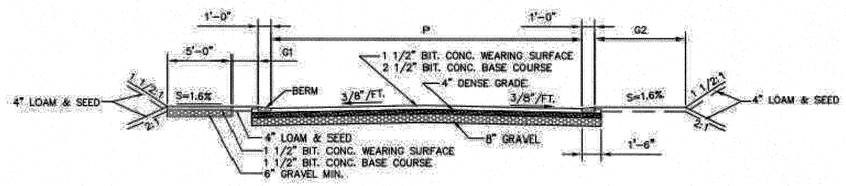

NOTES:
1. TYPICAL CROSS-SECTION FOR COORDINATION PURPOSES ONLY. REFER TO LAYOUT PLAN FOR EXACT DIMENSIONS AND LAYOUT.

TYPICAL 50' MINOR STREET CROSS-SECTIONAL LAYOUT — NOT TO SCALE — (5)

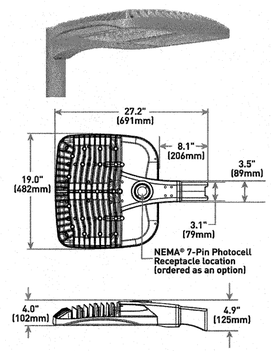

TYPICAL LIGHT FIXTURE - OSO LED AREA - LARGE — NOT TO SCALE — (6)

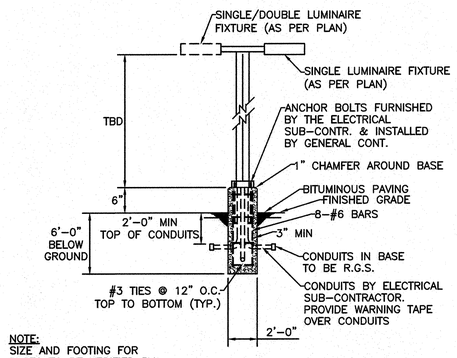

NOTE:
SIZE AND FOOTING FOR BASES TO BE VERIFIED BY STRUCTURAL ENGINEER.

RAISED LIGHT POLE 2' DIAMETER — NOT TO SCALE — (7)

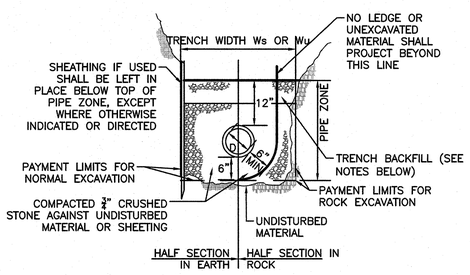

NOTES:

1. TRENCH BACKFILL TO BE USED WITHIN THE RIGHT-OF-WAY SHALL CONSIST OF EITHER GRAVEL BORROW MEETING MHD SPECIFICATION M1.03.0, TYPE "B" OR PROCESSED GRAVEL BORROW FOR SUBBASE MEETING MHD SPECIFICATION M1.03.1.
2. WHERE THE REMOVAL OF 100 SQUARE FEET OR LESS OF ASPHALT IS REQUIRED WITHIN THE RIGHT OF WAY, THEN THE TRENCH BACKFILL MATERIAL SHALL CONSIST OF CONTROLLED DENSITY FILL MEETING MHD SPECIFICATION M4.08.0, TYPE "1E" OR "2E".
3. TRENCH BACKFILL MATERIAL TO BE USED OF THE RIGHT-OF-WAY MAY CONSIST OF MATERIAL GENERATED DURING EXCAVATIONS PROVIDED ALL STONES GREATER THAN 4" ARE REMOVED PRIOR TO PLACEMENT AND COMPACTION
4. GRANULAR TRENCH BACKFILL MATERIAL USED WITHIN THE RIGHT-OF-WAY SHALL BE PLACED IN MAXIMUM 6" LIFTS AND MECHANICALLY COMPACTED TO A MINIMUM OF 95% OF THE MATERIAL'S MAXIMUM DRY DENSITY AND TO 90% ELSEWHERE AS DETERMINED BY ASTM D 1557.

SEWER TRENCH — NOT TO SCALE — (9)

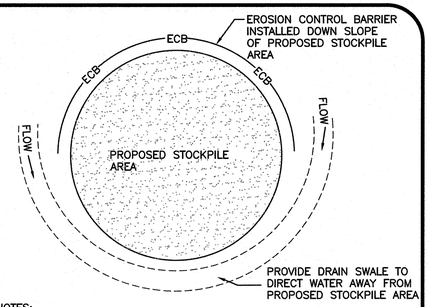

NOTES:
1. SOIL AND FILL STOCKPILES EXPECTED TO REMAIN IN PLACE FOR LESS THAN 90 DAYS SHALL BE COVERED WITH STRAW AND MULCH (AT 100 LBS/1,000 S.F.), OR WITH AN ANCHORED TARP WITHIN 7 DAYS OR PRIOR TO ANY RAINFALL.
2. SOIL AND FILL STOCKPILES EXPECTED TO REMAIN IN PLACE FOR 90 DAYS OR MORE SHALL BE SEEDED WITH WINTER RYE (FOR FALL SEEDING AT 1LB/1,000 SF) OR OATS (FOR SUMMER SEEDING AT 2LB/1,000 SF) AND THEN COVERED WITH HAY MULCH (AT 100LB/1,000 SF) OR AN ANCHORED TARP WITHIN 7 DAYS OR PRIOR TO ANY RAINFALL.

STOCKPILE PROTECTION — NOT TO SCALE — (10)

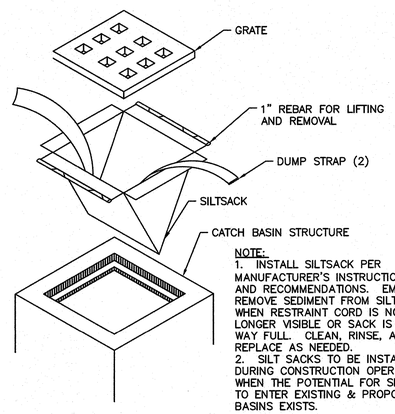

NOTE:
1. INSTALL SILTSACK PER MANUFACTURER'S INSTRUCTIONS AND RECOMMENDATIONS. EMPTY OR REMOVE SEDIMENT FROM SILTSACK WHEN RESTRAINT CORD IS NO LONGER VISIBLE OR SACK IS HALF WAY FULL. CLEAN, RINSE, AND REPLACE AS NEEDED.
2. SILT SACKS TO BE INSTALLED DURING CONSTRUCTION OPERATIONS WHEN THE POTENTIAL FOR SEDIMENT TO ENTER EXISTING & PROPOSED BASINS EXISTS.

SILTSACK INLET DETAIL — NOT TO SCALE — (11)

APPROVED BY:
TOWN OF LEXINGTON PLANNING BOARD

DATE: _____

THIS PLAN IS SUBJECT TO A COVENANT DATED _____

THIS PLAN IS SUBJECT TO A CERTIFICATE OF ACTION DATED _____

THIS PLAN IS SUBJECT TO A SPECIAL PERMIT DATED _____

I _____ TOWN CLERK OF THE TOWN OF LEXINGTON, MASSACHUSETTS HEREBY CERTIFY THAT THE NOTICE OF APPROVAL OF THIS PLAN HAS BEEN RECEIVED AND RECORDED AT THIS OFFICE AND NO NOTICE OF APPEAL WAS RECEIVED DURING THE TWENTY DAYS NEXT AFTER SUCH RECEIPT AND RECORDING OF SAID NOTICE.

TOWN CLERK _____ DATE _____

COMMONWEALTH OF MASSACHUSETTS — CARLTON M. QUINN — CIVIL — No. 49923 — REGISTERED PROFESSIONAL ENGINEER — 5.18.22

PROFESSIONAL ENGINEER FOR ALLEN & MAJOR ASSOCIATES, INC.

REV	DATE	DESCRIPTION

APPLICANT\OWNER:
12-18 HARTWELL OWNER, LLC. &
24 HARTWELL OWNER, LLC
C/O GREATLAND REALTY PARTNERS
ONE FEDERAL STREET, SUITE 1810
BOSTON, MA 02110

PROJECT:
DEFINITIVE
NON-RESIDENTIAL SUBDIVISION
12-18 & 24 HARWELL AVENUE
LEXINGTON, MA

PROJECT NO.	3021-02	DATE ISSUED:	5-18-2022
SCALE:	AS SHOWN	DWG. NAME:	CIVIL
DESIGNED BY:	DMR/SJL	CHECKED BY:	CMQ

PREPARED BY:

ALLEN & MAJOR ASSOCIATES, INC.
civil engineering ◆ land surveying
environmental consulting ◆ landscape architecture
www.allenmajor.com
100 COMMERCE WAY, SUITE 5
WOBURN MA 01801
TEL: (781) 935-6889
FAX: (781) 935-2896
WOBURN, MA ◆ LAKEVILLE, MA ◆ MANCHESTER, NH

THIS DRAWING HAS BEEN PREPARED IN DIGITAL FORMAT. CLIENT/CLIENT'S REPRESENTATIVE OR CONSULTANTS MAY BE PROVIDED COPIES OF DRAWINGS AND SPECIFICATIONS FOR HIS/HER INFORMATION AND/OR SPECIFIC USE ON THIS PROJECT. DUE TO THE POTENTIAL THAT THE PROVIDED INFORMATION MAY BE MODIFIED UNINTENTIONALLY OR OTHERWISE, ALLEN & MAJOR ASSOCIATES, INC. MAY REMOVE ALL INDICATION OF THE DOCUMENT'S AUTHORSHIP ON THE DIGITAL MEDIA. PRINTED REPRESENTATIONS OR PORTABLE DOCUMENT FORMAT OF THE DRAWINGS AND SPECIFICATIONS ISSUED SHALL BE THE ONLY RECORD COPIES OF ALLEN & MAJOR ASSOCIATES, INC.'S WORK PRODUCT.

DRAWING TITLE: DETAILS

SHEET No. C-501

Copyright©2022 Allen & Major Associates, Inc.
All Rights Reserved

N:\PROJECTS\3021-02\CIVIL\DRAWINGS\CURRENT\DEFINITIVE SUBDIVISION\C-3021-02_DETAILS.DWG

STORMTECH CHAMBER SPECIFICATIONS

1. CHAMBERS SHALL BE STORMTECH SC-740.
2. CHAMBERS SHALL BE MANUFACTURED FROM VIRGIN POLYPROPYLENE OR POLYETHYLENE RESINS.
3. CHAMBER ROWS SHALL PROVIDE CONTINUOUS, UNOBSTRUCTED INTERNAL SPACE WITH NO INTERNAL SUPPORT PANELS THAT WOULD IMPEDE FLOW OR LIMIT ACCESS FOR INSPECTION.
4. THE STRUCTURAL DESIGN OF THE CHAMBERS, THE STRUCTURAL BACKFILL, AND THE INSTALLATION REQUIREMENTS SHALL ENSURE THAT THE LOAD FACTORS SPECIFIED IN THE AASHTO LRFD BRIDGE DESIGN SPECIFICATIONS, SECTION 12.12, ARE MET FOR: 1) LONG-DURATION DEAD LOADS AND 2) SHORT-DURATION LIVE LOADS, BASED ON THE AASHTO DESIGN TRUCK WITH CONSIDERATION FOR IMPACT AND MULTIPLE VEHICLE PRESENCES.
5. CHAMBERS SHALL MEET ASTM F2922 (POLYETHYLENE) OR ASTM F2418-16 (POLYPROPYLENE), "STANDARD SPECIFICATION FOR THERMOPLASTIC CORRUGATED WALL STORMWATER COLLECTION CHAMBERS".
6. CHAMBERS SHALL BE DESIGNED AND ALLOWABLE LOADS DETERMINED IN ACCORDANCE WITH ASTM F2787, "STANDARD PRACTICE FOR STRUCTURAL DESIGN OF THERMOPLASTIC CORRUGATED WALL STORMWATER COLLECTION CHAMBERS".
7. ONLY CHAMBERS THAT ARE APPROVED BY THE SITE DESIGN ENGINEER WILL BE ALLOWED. THE CHAMBER MANUFACTURER SHALL SUBMIT THE FOLLOWING UPON REQUEST TO THE SITE DESIGN ENGINEER FOR APPROVAL BEFORE DELIVERING CHAMBERS TO THE PROJECT SITE:
   a. A STRUCTURAL EVALUATION SEALED BY A REGISTERED PROFESSIONAL ENGINEER THAT DEMONSTRATES THAT THE SAFETY FACTORS ARE GREATER THAN OR EQUAL TO 1.95 FOR DEAD LOAD AND 1.75 FOR LIVE LOAD, THE MINIMUM REQUIRED BY ASTM F2787 AND BY AASHTO FOR THERMOPLASTIC PIPE.
   b. A STRUCTURAL EVALUATION SEALED BY A REGISTERED PROFESSIONAL ENGINEER THAT DEMONSTRATES THAT THE LOAD FACTORS SPECIFIED IN THE AASHTO LRFD BRIDGE DESIGN SPECIFICATIONS, SECTION 12.12, ARE MET. THE 50 YEAR CREEP MODULUS DATA SPECIFIED IN ASTM F2418 OR ASTM F2922 MUST BE USED AS PART OF THE AASHTO STRUCTURAL EVALUATION TO VERIFY LONG-TERM PERFORMANCE.
   c. STRUCTURAL CROSS SECTION DETAIL ON WHICH THE STRUCTURAL EVALUATION IS BASED.
8. CHAMBERS AND END CAPS SHALL BE PRODUCED AT AN ISO 9001 CERTIFIED MANUFACTURING FACILITY.

IMPORTANT - NOTES FOR THE BIDDING AND INSTALLATION OF THE SC-310/SC-740 SYSTEM

1. STORMTECH SC-310 & SC-740 CHAMBERS SHALL NOT BE INSTALLED UNTIL THE MANUFACTURER'S REPRESENTATIVE HAS COMPLETED A PRE-CONSTRUCTION MEETING WITH THE INSTALLERS.
2. STORMTECH SC-310 & SC-740 CHAMBERS SHALL BE INSTALLED IN ACCORDANCE WITH THE "STORMTECH SC-310/SC-740/DC-780 CONSTRUCTION GUIDE".
3. CHAMBERS ARE NOT TO BE BACKFILLED WITH A DOZER OR AN EXCAVATOR SITUATED OVER THE CHAMBERS. STORMTECH RECOMMENDS 3 BACKFILL METHODS:
   - STONESHOOTER LOCATED OFF THE CHAMBER BED.
   - BACKFILL AS ROWS ARE BUILT USING AN EXCAVATOR ON THE FOUNDATION STONE OR SUBGRADE.
   - BACKFILL FROM OUTSIDE THE EXCAVATION USING A LONG BOOM HOE OR EXCAVATOR.
4. THE FOUNDATION STONE SHALL BE LEVELED AND COMPACTED PRIOR TO PLACING CHAMBERS.
5. JOINTS BETWEEN CHAMBERS SHALL BE PROPERLY SEATED PRIOR TO PLACING STONE.
6. MAINTAIN MINIMUM - 6" (150 mm) SPACING BETWEEN THE CHAMBER ROWS.
7. EMBEDMENT STONE SURROUNDING CHAMBERS MUST BE A CLEAN, CRUSHED, ANGULAR STONE 3/4-2" (20-50 mm).
8. THE CONTRACTOR MUST REPORT ANY DISCREPANCIES WITH CHAMBER FOUNDATION MATERIALS BEARING CAPACITIES TO THE SITE DESIGN ENGINEER.
9. ADS RECOMMENDS THE USE OF "FLEXSTORM CATCH IT" INSERTS DURING CONSTRUCTION FOR ALL INLETS TO PROTECT THE SUBSURFACE STORMWATER MANAGEMENT SYSTEM FROM CONSTRUCTION SITE RUNOFF.

NOTES FOR CONSTRUCTION EQUIPMENT

1. STORMTECH SC-310 & SC-740 CHAMBERS SHALL BE INSTALLED IN ACCORDANCE WITH THE "STORMTECH SC-310/SC-740/DC-780 CONSTRUCTION GUIDE".
2. THE USE OF CONSTRUCTION EQUIPMENT OVER SC-310 & SC-740 CHAMBERS IS LIMITED:
   - NO EQUIPMENT IS ALLOWED ON BARE CHAMBERS.
   - NO RUBBER TIRED LOADERS, DUMP TRUCKS, OR EXCAVATORS ARE ALLOWED UNTIL PROPER FILL DEPTHS ARE REACHED IN ACCORDANCE WITH THE "STORMTECH SC-310/SC-740/DC-780 CONSTRUCTION GUIDE".
   - WEIGHT LIMITS FOR CONSTRUCTION EQUIPMENT CAN BE FOUND IN THE "STORMTECH SC-310/SC-740/DC-780 CONSTRUCTION GUIDE".
3. FULL 36" (900 mm) OF STABILIZED COVER MATERIALS OVER THE CHAMBERS IS REQUIRED FOR DUMP TRUCK TRAVEL OR DUMPING.

USE OF A DOZER TO PUSH EMBEDMENT STONE BETWEEN THE ROWS OF CHAMBERS MAY CAUSE DAMAGE TO THE CHAMBERS AND IS NOT AN ACCEPTABLE BACKFILL METHOD. ANY CHAMBERS DAMAGED BY THE "DUMP AND PUSH" METHOD ARE NOT COVERED UNDER THE STORMTECH STANDARD WARRANTY.

CONTACT STORMTECH AT 1-888-892-2694 WITH ANY QUESTIONS ON INSTALLATION REQUIREMENTS OR WEIGHT LIMITS FOR CONSTRUCTION EQUIPMENT.

ACCEPTABLE FILL MATERIALS: STORMTECH SC-740 CHAMBER SYSTEMS

	MATERIAL LOCATION	DESCRIPTION	AASHTO MATERIAL CLASSIFICATIONS	COMPACTION / DENSITY REQUIREMENT
D	**FINAL FILL:** FILL MATERIAL FOR LAYER 'D' STARTS FROM THE TOP OF THE 'C' LAYER TO THE BOTTOM OF FLEXIBLE PAVEMENT OR UNPAVED FINISHED GRADE ABOVE. NOTE THAT PAVEMENT SUBBASE MAY BE PART OF THE 'D' LAYER.	SEE PAVEMENT DETAIL	N/A	SEE PAVEMENT DETAIL
C	**INITIAL FILL:** FILL MATERIAL FOR LAYER 'C' STARTS FROM THE TOP OF THE EMBEDMENT STONE ('B' LAYER) TO 18" (450 mm) ABOVE THE TOP OF THE CHAMBER. NOTE THAT PAVEMENT SUBBASE MAY BE A PART OF THE 'C' LAYER.	GRANULAR WELL-GRADED SOIL/AGGREGATE MIXTURES, <35% FINES OR PROCESSED AGGREGATE. MOST PAVEMENT SUBBASE MATERIALS CAN BE USED IN LIEU OF THIS LAYER.	AASHTO M145[1] A-1, A-2-4, A-3 OR AASHTO M43[1] 3, 357, 4, 467, 5, 56, 57, 6, 67, 68, 7, 78, 8, 89, 9, 10	BEGIN COMPACTIONS AFTER 12" (300 mm) OF MATERIAL OVER THE CHAMBERS IS REACHED. COMPACT ADDITIONAL LAYERS IN 6" (150 mm) MAX LIFTS TO A MIN. 95% PROCTOR DENSITY FOR WELL GRADED MATERIAL AND 95% RELATIVE DENSITY FOR PROCESSED AGGREGATE MATERIALS. ROLLER GROSS VEHICLE WEIGHT NOT TO EXCEED 12,000 lbs (53 kN). DYNAMIC FORCE NOT TO EXCEED 20,000 lbs (89 kN).
B	**EMBEDMENT STONE:** FILL SURROUNDING THE CHAMBERS FROM THE FOUNDATION STONE ('A' LAYER) TO THE 'C' LAYER ABOVE.	CLEAN, CRUSHED, ANGULAR STONE	AASHTO M43[1] 3, 357, 4, 467, 5, 56, 57	NO COMPACTION REQUIRED.
A	**FOUNDATION STONE:** FILL BELOW CHAMBERS FROM THE SUBGRADE UP TO THE FOOT (BOTTOM) OF THE CHAMBER.	CLEAN, CRUSHED, ANGULAR STONE	AASHTO M43[1] 3, 357, 4, 467, 5, 56, 57	PLATE COMPACT OR ROLL TO ACHIEVE A FLAT SURFACE[2,3]

PLEASE NOTE:
1. THE LISTED AASHTO DESIGNATIONS ARE FOR GRADATIONS ONLY. THE STONE MUST ALSO BE CLEAN, CRUSHED, ANGULAR. FOR EXAMPLE, A SPECIFICATION FOR #4 STONE WOULD STATE: "CLEAN, CRUSHED, ANGULAR NO. 4 (AASHTO M43) STONE".
2. STORMTECH COMPACTION REQUIREMENTS ARE MET FOR 'A' LOCATION MATERIALS WHEN PLACED AND COMPACTED IN 9" (150 mm) (MAX) LIFTS USING TWO FULL COVERAGES WITH A VIBRATORY COMPACTOR.
3. WHERE INFILTRATION SURFACES MAY BE COMPROMISED BY COMPACTION, FOR STANDARD DESIGN LOAD CONDITIONS, A FLAT SURFACE MAY BE ACHIEVED BY RAKING OR DRAGGING WITHOUT COMPACTION EQUIPMENT. FOR SPECIAL LOAD DESIGNS, CONTACT STORMTECH FOR COMPACTION REQUIREMENTS.
4. ONCE LAYER 'C' IS PLACED, ANY SOIL/MATERIAL CAN BE PLACED IN LAYER 'D' UP TO THE FINISHED GRADE. MOST PAVEMENT SUBBASE SOILS CAN BE USED TO REPLACE THE MATERIAL REQUIREMENTS OF LAYER 'C' OR 'D' AT THE SITE DESIGN ENGINEER'S DISCRETION.

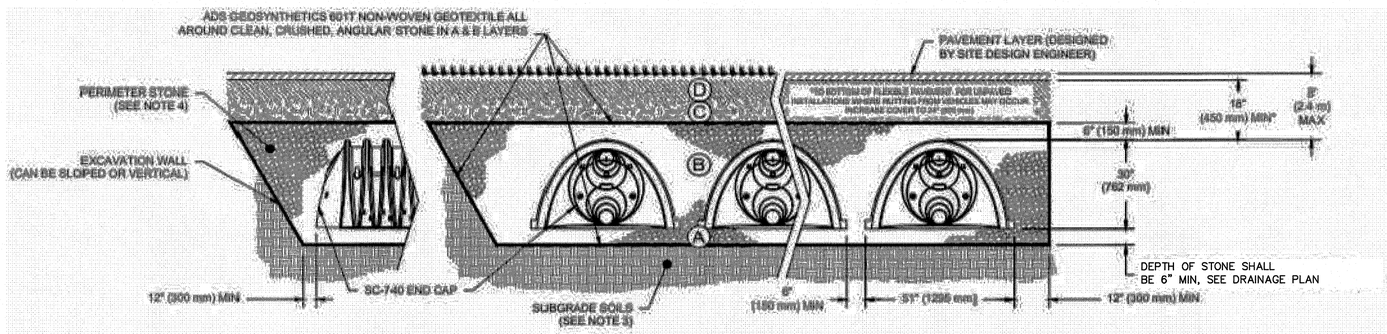

NOTES:

1. CHAMBERS SHALL MEET THE REQUIREMENTS OF ASTM F2418-16a, "STANDARD SPECIFICATION FOR POLYPROPYLENE (PP) CORRUGATED WALL STORMWATER COLLECTION CHAMBERS".
2. SC-740 CHAMBERS SHALL BE DESIGNED IN ACCORDANCE WITH ASTM F2787 "STANDARD PRACTICE FOR STRUCTURAL DESIGN OF THERMOPLASTIC CORRUGATED WALL STORMWATER COLLECTION CHAMBERS".
3. THE SITE DESIGN ENGINEER IS RESPONSIBLE FOR ASSESSING THE BEARING RESISTANCE (ALLOWABLE BEARING CAPACITY) OF THE SUBGRADE SOILS AND THE DEPTH OF FOUNDATION STONE WITH CONSIDERATION FOR THE RANGE OF EXPECTED SOIL MOISTURE CONDITIONS.
4. PERIMETER STONE MUST BE EXTENDED HORIZONTALLY TO THE EXCAVATION WALL FOR BOTH VERTICAL AND SLOPED EXCAVATION WALLS.
5. REQUIREMENTS FOR HANDLING AND INSTALLATION:
   - TO MAINTAIN THE WIDTH OF CHAMBERS DURING SHIPPING AND HANDLING, CHAMBERS SHALL HAVE INTEGRAL, INTERLOCKING STACKING LUGS.
   - TO ENSURE A SECURE JOINT DURING INSTALLATION AND BACKFILL, THE HEIGHT OF THE CHAMBER JOINT SHALL NOT BE LESS THAN 2".
   - TO ENSURE THE INTEGRITY OF THE ARCH SHAPE DURING INSTALLATION, a) THE ARCH STIFFNESS CONSTANT AS DEFINED IN SECTION 6.2.8 OF ASTM F2418 SHALL BE GREATER THAN OR EQUAL TO 550 LBS/IN/IN. AND b) TO RESIST CHAMBER DEFORMATION DURING INSTALLATION AT ELEVATED TEMPERATURES (ABOVE 73° F / 23° C), CHAMBERS SHALL BE PRODUCED FROM REFLECTIVE GOLD OR YELLOW COLORS.

NOTES:

SEE DRAINAGE PLAN, SHEET C-102 FOR SITE-SPECIFIC ELEVATIONS, INVERTS AND SYSTEM DETAILS.

SC-740 STANDARD DETAIL (1)
NOT TO SCALE

ADVANCED DRAINAGE SYSTEMS, INC.

NOT FOR CONSTRUCTION

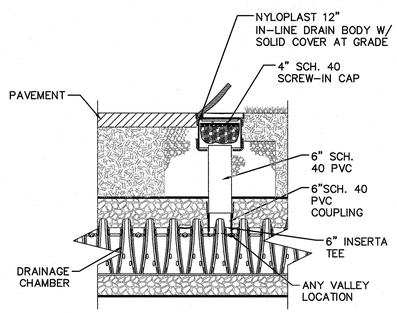

NOTES:
1. INSPECTION PORTS MAY BE CONNECTED THROUGH ANY CHAMBER CORRUGATION VALLEY
2. ALL SCHEDULE 40 FITTINGS TO BE SOLVENT CEMENTED.

TYPICAL DRAINAGE INSPECTION PORT (2)
NOT TO SCALE

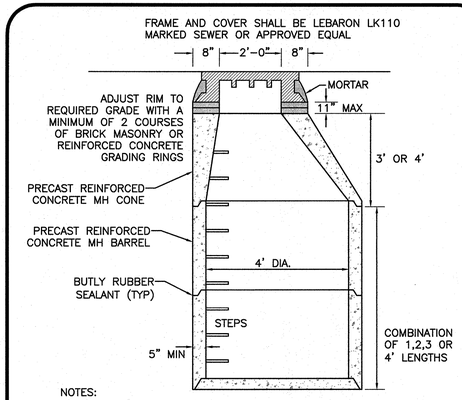

NOTES:
1. ALL EXTERIOR SURFACES OF MANHOLE GRADE ADJUSTMENT COURSES SHALL BE COVERED WITH $\frac{1}{4}$" TO $\frac{3}{8}$" MASONRY CEMENT PLASTER.
2. PROVIDE SHOP DRAWING FOR REVIEW & APPROVAL.

PRECAST CONCRETE SEWER MANHOLE (3)
NOT TO SCALE

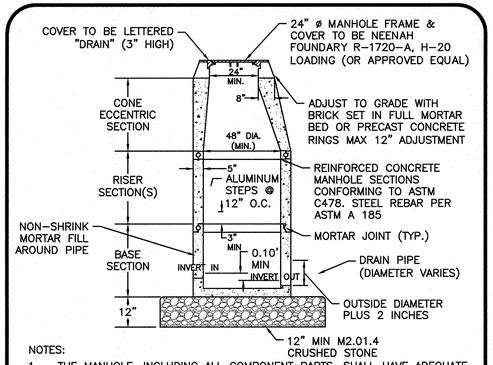

NOTES:
1. THE MANHOLE, INCLUDING ALL COMPONENT PARTS, SHALL HAVE ADEQUATE SPACE AND STRENGTH QUALITIES CONSIDERED NECESSARY FOR THE INTENDED SERVICE. SPACE REQUIREMENT AND CONFIGURATIONS SHALL BE AS SHOWN ON THE DRAWING. THE COMPLETE STRUCTURE SHALL BE OF SUCH MATERIAL AND QUALITY AS TO WITHSTAND (H-20 LOADING) WITHOUT FAILURE.

VERTICAL FOOT OF MANHOLE.

PRECAST DRAIN MANHOLE (4)
NOT TO SCALE

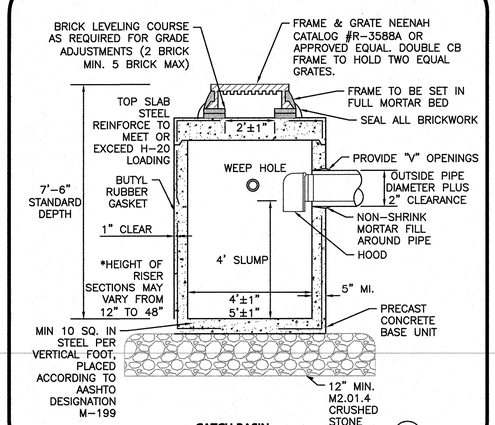

CATCH BASIN (3)
NOT TO SCALE

APPROVED BY:
TOWN OF LEXINGTON PLANNING BOARD

DATE: _____

THIS PLAN IS SUBJECT TO A COVENANT
DATED _____
THIS PLAN IS SUBJECT TO A CERTIFICATE OF ACTION DATED _____
THIS PLAN IS SUBJECT TO A SPECIAL PERMIT
DATED _____

I _____ TOWN CLERK OF THE TOWN OF LEXINGTON, MASSACHUSETTS HEREBY CERTIFY THAT THE NOTICE OF APPROVAL OF THIS PLAN HAS BEEN RECEIVED AND RECORDED AT THIS OFFICE AND NO NOTICE OF APPEAL WAS RECEIVED DURING THE TWENTY DAYS NEXT AFTER SUCH RECEIPT AND RECORDING OF SAID NOTICE.

TOWN CLERK _____ DATE _____

COMMONWEALTH OF MASSACHUSETTS
CARLTON M. QUINN
CIVIL
No. 49923
REGISTERED PROFESSIONAL ENGINEER
5.18.22

PROFESSIONAL ENGINEER FOR ALLEN & MAJOR ASSOCIATES, INC.

REV	DATE	DESCRIPTION

APPLICANT\OWNER:
12-18 HARTWELL OWNER, LLC. &
24 HARTWELL OWNER, LLC
C/O GREATLAND REALTY PARTNERS
ONE FEDERAL STREET, SUITE 1810
BOSTON, MA 02110

PROJECT:
DEFINITIVE
NON-RESIDENTIAL SUBDIVISION
12-18 & 24 HARWELL AVENUE
LEXINGTON, MA

PROJECT NO.	3021-02	DATE ISSUED:	5-18-2022
SCALE:	AS SHOWN	DWG. NAME:	CIVIL
DESIGNED BY:	DMR/SJL	CHECKED BY:	CMQ

PREPARED BY:

ALLEN & MAJOR ASSOCIATES, INC.
civil engineering ◆ land surveying
environmental consulting ◆ landscape architecture
www.allenmajor.com
100 COMMERCE WAY, SUITE 5
WOBURN MA 01801
TEL: (781) 935-6889
FAX: (781) 935-2896
WOBURN, MA ◆ LAKEVILLE, MA ◆ MANCHESTER, NH

THIS DRAWING HAS BEEN PREPARED IN DIGITAL FORMAT. CLIENT/CLIENT'S REPRESENTATIVE OR CONSULTANTS MAY BE PROVIDED COPIES OF DRAWINGS AND SPECIFICATIONS FOR HIS/HER INFORMATION AND/OR SPECIFIC USE ON THIS PROJECT. DUE TO THE POTENTIAL THAT THE PROVIDED INFORMATION MAY BE MODIFIED UNINTENTIONALLY OR OTHERWISE, ALLEN & MAJOR ASSOCIATES, INC. MAY REMOVE ALL INDICATION OF THE DOCUMENT'S AUTHORSHIP ON THE DIGITAL MEDIA. PRINTED REPRESENTATIONS OR PORTABLE DOCUMENT FORMAT OF THE DRAWINGS AND SPECIFICATIONS ISSUED SHALL BE THE ONLY RECORD COPIES OF ALLEN & MAJOR ASSOCIATES, INC.'S WORK PRODUCT.

DRAWING TITLE: DETAILS

SHEET No. C-502

Copyright ©2022 Allen & Major Associates, Inc.
All Rights Reserved

N:\PROJECTS\3021-02\CIVIL\DRAWINGS\CURRENT\DEFINITIVE SUBDIVISION\C-3021-02_DETAILS.DWG

NOT FOR CONSTRUCTION

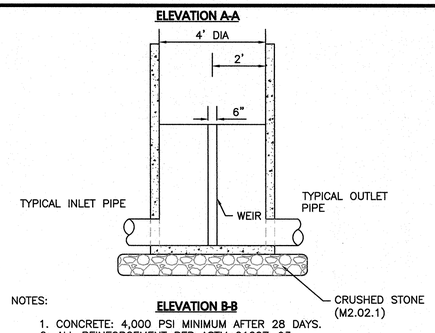

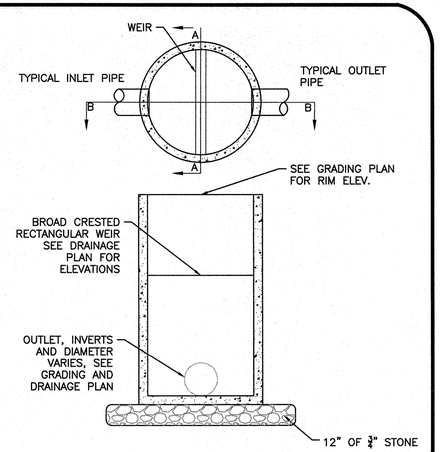

NOTES:

1. CONCRETE: 4,000 PSI MINIMUM AFTER 28 DAYS.
2. ALL REINFORCEMENT PER ASTM C1227–93.
3. TONGUE & GROOVE JOINT SEALED WITH BUTYLE RESIN OR MASTIC.
4. WALLS ARE TO BE 6" THICK & BOTTOM TO BE 8" THICK.
5. PROVIDE 4' SUMP.
6. SEE GRADING AND DRAINAGE PLAN FOR RIM, INVERT AND WEIR ELEVATIONS, MATERIAL AND MORE INFORMATION.

4' DIAMETER OUTLET CONTROL STRUCTURE (1)
NOT TO SCALE

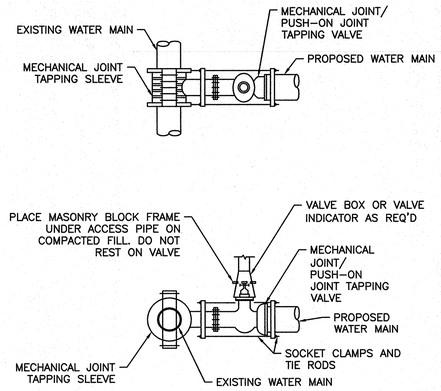

TAPPING VALVE AND SLEEVE (2)
NOT TO SCALE

NOTES:

1. ALL WATER MAIN FITTINGS, BENDS, TEES, PLUGS ETC. SHALL BE RESTRAINED W/ THRUST BLOCKS EXCEPT WHERE NOTED.
2. ALL THRUST BLOCKS & COLLARS SHALL BE INSTALLED SO THAT THEY BEAR AGAINST UNDISTURBED EARTH.
3. SIZE OF CONCRETE THRUST BLOCKS SHALL BE AS NOTED BELOW.
4. MINIMUM COMPRESSIVE STRENGTH OF THRUST BLOCK CONCRETE SHALL BE 3,000 P.S.I.
5. KEEP CONCRETE CLEAR OF MECHANICAL JOINTS.
6. THE BELOW PREDICATED ON A WATER PRESSURE OF 225 PSI AND A SOIL RESISTANCE OF 2000 PSF (TILL). FOR OTHER SOILS THE VALUES IN THE ABOVE TABLE SHALL BE MULTIPLIED BY:

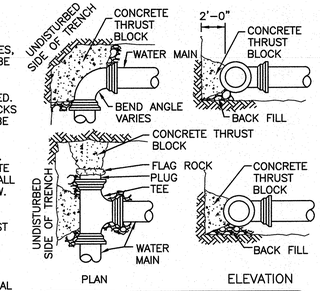

MINIMUM THRUST BLOCK BEARING AREAS				
PIPE ø	90° BEND (SQ. FT.)	45° BEND (SQ. FT.)	22.5° BEND (SQ. FT.)	TEES, PLUGS, CAPS & HYD. (SQ.FT.)
6"	5	3	3	4
8"	9	6	3	9
10"	13	7	4	12
12"	20	10	5	16

THRUST BLOCK DETAILS (3)
NOT TO SCALE

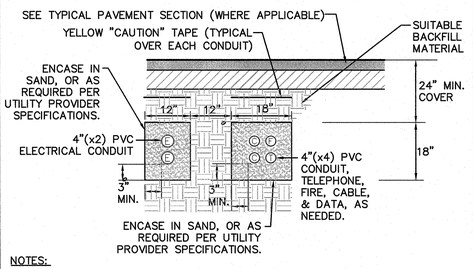

NOTES:

1. CONDUITS SHALL BE SCHEDULE 80 PVC UNDER ROAD AND DRIVEWAY SURFACES.
2. ALL UTILITY INSTALLATION REQUIREMENTS, SEPARATIONS, AND CONDUIT SIZES TO BE VERIFIED WITH EACH UTILITY COMPANY PRIOR TO INSTALLATION OF ANY UNDERGROUND UTILITY CONDUIT.
3. SEE SITE ELECTRICAL PLANS FOR SPECIFIC SERVICE PROVIDER DETAILS.

BURIED CONDUIT DETAIL (5)
NOT TO SCALE

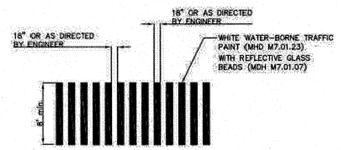

CROSSWALK ALL LOCATIONS

NOTES:

1. WHERE PROVIDED, STOP LINES SHOULD BE PLACED NO LESS THAN 4 FEET BEHIND AN ADJACENT CROSSWALK LINE.
2. MID–BLOCK CROSSWALKS SHALL NOT BE INSTALLED IN AREAS WITH THE SIGHT DISTANCE LESS THAN THAT SHOWN IN THE TABLE BELOW.

TYPICAL TOWN OF LEXINGTON CROSSWALK (6)
NOT TO SCALE

NOTES:

1. MINIMUM BURIAL DEPTH (FINISH GRADE TO TOP OF PIPE) GRAVITY PIPE (SEWER & DRAIN) – SEE PLAN OR PROFILE PRESSURE PIPE UNDER PAVING – 4' PRESSURE PIPE BENEATH UNPAVED – 3' WATER PIPE – 5'
2. WHERE BACKFILL IS DESIGNATED AS COMPACTED, THIS MEANS 90 TO 95% STANDARD PROCTOR. AASHTO T–99. ALL FILL PLACED BELOW PIPES AND STRUCTURES MUST MEET THIS REQUIREMENT.
3. TRENCHES WITHIN PUBLIC RIGHT OF WAY MAY REQUIRE FLOWABLE FILL. VERIFY WITH MUNICIPAL ENGINEER.
4. WHERE WASTE FILLS ARE ENCOUNTERED AT SUBGRADE LEVEL FOR NEW UTILITIES, THE FILL SHOULD BE OVER–EXCAVATED, THE SUBGRADE SHOULD BE RE–COMPACTED, AND BACKFILL CONSISTING OF PIPE BEDDING MATERIAL, CRUSHED STONE OR OTHER SUITABLE GRANULAR FILL SHOULD BE PLACED TO A SUFFICIENT DEPTH TO CREATE A FIRM AND STABLE SUBGRADE (TYPICALLY 12 TO 18 INCHES OVER–EXCAVATION).
5. REFER TO PAVING, CURBS, WALKS AND DRIVEWAY DETAILS.

FILTER FABRIC USE

	SOIL TYPE	
	SILT OR CLAY	GRANULAR SOIL
ABOVE GROUND WATER	FILTER FABRIC NOT REQUIRED	FILTER FABRIC NOT REQUIRED
BELOW GROUND WATER	FILTER FABRIC REQUIRED	FILTER FABRIC NOT REQUIRED

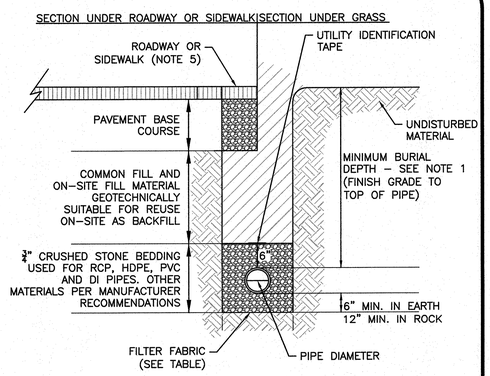

UTILITY TRENCH (7)
NOT TO SCALE

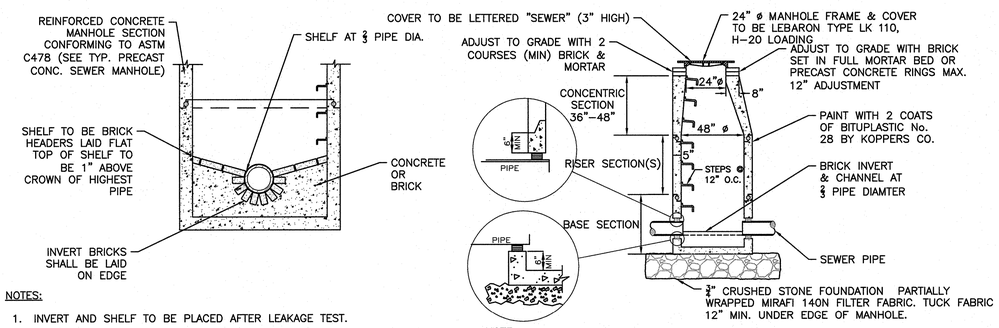

NOTES:

1. INVERT AND SHELF TO BE PLACED AFTER LEAKAGE TEST.
2. MANHOLES SHALL HAVE A BRICK PAVED SHELF AND INVERT, CONSTRUCTED TO CONFORM TO THE SIZE OF PIPE AND FLOW. AT CHANGES IN DIRECTION, THE INVERTS SHALL BE LAID OUT IN CURVES OF THE LONGEST RADIUS POSSIBLE TANGENT TO THE CENTER LINE OF THE HIGHEST PIPE CROWN AND SLOPE TO DRAIN TOWARD THE FLOWING THROUGH CHANNEL. UNDERLAYMENT OF INVERT AND SHELF SHALL CONSIST OF CEMENT CONCRETE OR BRICK IN MORTAR.

NOTE:
THE MANHOLE, INCLUDING ALL COMPONENT PARTS, SHALL HAVE ADEQUATE SPACE, STRENGTH AND LEAK PROOF QUALITIES CONSIDERED NECESSARY FOR THE INTENDED SERVICE SPACE REQUIREMENT AND CONFIGURATIONS SHALL BE AS SHOWN ON THE DRAWING. MANHOLES MAY BE AN ASSEMBLY OR PRECAST SECTIONS, WITH OR WITHOUT STEEL REINFORCEMENT, WITH ADEQUATE JOINTING OR CONCRETE CAST MONOLITHICALLY IN PLACE WITH OR WITHOUT REINFORCEMENT. IN ANY APPROVED MANHOLE, THE COMPLETE STRUCTURE SHALL BE OF SUCH MATERIAL AND QUALITY AS TO WITHSTAND LOADS OF 8 TONS (H–20 LOADING) WITHOUT FAILURE AND PREVENT LEAKAGE IN EXCESS OF ONE GALLON PER DAY PER VERTICAL FOOT OF MANHOLE.

PRECAST CONCRETE SEWER MANHOLE (9)
NOT TO SCALE

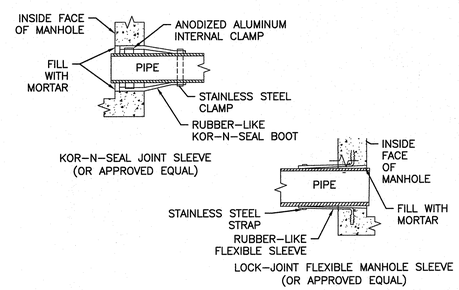

NOTES:
1. PIPE TO MANHOLE JOINTS SHALL BE ONLY AS APPROVED BY THE ENGINEER AND IN GENERAL, WILL DEPEND FOR WATER TIGHTNESS UPON ELASTOMETRIC SEALANT
2. NON–SHRINKING MORTAR SHALL ONLY BE USED WHERE SPECIFICALLY APPROVED BY THE ENGINEER.

PIPE CONNECTION TO SEWER MANHOLE (4)
NOT TO SCALE

APPROVED BY:
TOWN OF LEXINGTON PLANNING BOARD

DATE: _____

THIS PLAN IS SUBJECT TO A COVENANT
DATED _____
THIS PLAN IS SUBJECT TO A CERTIFICATE OF ACTION DATED _____
THIS PLAN IS SUBJECT TO A SPECIAL PERMIT
DATED _____

I _____ TOWN CLERK OF THE TOWN OF LEXINGTON, MASSACHUSETTS HEREBY CERTIFY THAT THE NOTICE OF APPROVAL OF THIS PLAN HAS BEEN RECEIVED AND RECORDED AT THIS OFFICE AND NO NOTICE OF APPEAL WAS RECEIVED DURING THE TWENTY DAYS NEXT AFTER SUCH RECEIPT AND RECORDING OF SAID NOTICE.

TOWN CLERK _____ DATE _____

COMMONWEALTH OF MASSACHUSETTS
CARLTON M. QUINN
CIVIL
NO. 49923
REGISTERED PROFESSIONAL ENGINEER
5.18.22

PROFESSIONAL ENGINEER FOR
ALLEN & MAJOR ASSOCIATES, INC.

REV	DATE	DESCRIPTION

APPLICANT\OWNER:
12-18 HARTWELL OWNER, LLC. &
24 HARTWELL OWNER, LLC
C/O GREATLAND REALTY PARTNERS
ONE FEDERAL STREET, SUITE 1810
BOSTON, MA 02110

PROJECT:
DEFINITIVE
NON-RESIDENTIAL SUBDIVISION
12-18 & 24 HARWELL AVENUE
LEXINGTON, MA

PROJECT NO.	3021-02	DATE ISSUED:	5-18-2022
SCALE:	AS SHOWN	DWG. NAME:	CIVIL
DESIGNED BY:	DMR/SJL	CHECKED BY:	CMQ

PREPARED BY:

ALLEN & MAJOR ASSOCIATES, INC.
civil engineering ◆ land surveying
environmental consulting ◆ landscape architecture
www.allenmajor.com
100 COMMERCE WAY, SUITE 5
WOBURN MA 01801
TEL: (781) 935-6889
FAX: (781) 935-2896
WOBURN, MA ◆ LAKEVILLE, MA ◆ MANCHESTER, NH

THIS DRAWING HAS BEEN PREPARED IN DIGITAL FORMAT. CLIENT/CLIENT'S REPRESENTATIVE OR CONSULTANTS MAY BE PROVIDED COPIES OF DRAWINGS AND SPECIFICATIONS FOR HIS/HER INFORMATION AND/OR SPECIFIC USE ON THIS PROJECT. DUE TO THE POTENTIAL THAT THE PROVIDED INFORMATION MAY BE MODIFIED UNINTENTIONALLY OR OTHERWISE, ALLEN & MAJOR ASSOCIATES, INC. MAY REMOVE ALL INDICATION OF THE DOCUMENT'S AUTHORSHIP ON THE DIGITAL MEDIA. PRINTED REPRESENTATIONS OR PORTABLE DOCUMENT FORMAT OF THE DRAWINGS AND SPECIFICATIONS ISSUED SHALL BE THE ONLY RECORD COPIES OF ALLEN & MAJOR ASSOCIATES, INC.'S WORK PRODUCT.

DRAWING TITLE: DETAILS

SHEET No. C-503

Copyright©2022 Allen & Major Associates, Inc.
All Rights Reserved

N:\PROJECTS\3021-02\CIVIL\DRAWINGS\CURRENT\DEFINITIVE SUBDIVISION\C-3021-02_DETAILS.DWG

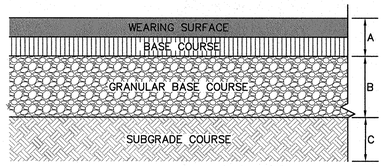

NOTES:

1. COMPACT SOIL SUBGRADE UNIFORMLY TO AT LEAST 95 PERCENT OF ASTM D1557 LABORATORY DENSITY.
2. PROOF-ROLL PREPARED SUBGRADE TO IDENTIFY SIFT POCKETS AND AREAS OF EXCESS YIELDING. EXCAVATE SOFT SPOTS, UNSATISFACTORY SOILS, AND AREAS OF EXCESSIVE PUMPING OR RUTTING, AS DETERMINED BY GEOTECHNICAL ENGINEER AND REPLACE WITH COMPACTED BACKFILL OR FILL AS DIRECTED.
3. CONTRACTOR SHALL COORDINATE SURFACE, BINDER, BASE, AND SUBBASE COURSES WITH GEOTECHNICAL OR SOILS REPORT. REFER TO REPORT FOR RECOMMENDATIONS FOR LOCAL SOILS OR DRAINAGE CONDITIONS AND/OR METHODS.
4. BASE COURSE SHALL EXTEND 6 INCHES MIN. BEYOND PAVEMENT EDGE WHERE PAVEMENT DOES NOT ABUT CURB, WALL, STEPS, OR FIXED OBJECT.
5. PAVEMENT EDGES SHALL BE TAMPED WHERE PAVEMENT DOES NOT ABUT CURB, WALL, STEPS, OR FIXED OBJECT.
6. PROVIDE SHOP DRAWING FOR APPROVAL.

STANDARD DUTY PAVING

A= 1.5" BITUMINOUS ASPHALT CONCRETE – WEARING SURFACE COURSE (M.3.11.3, TABLE A, TOP COURSE)

2.5" ASPHALT CONCRETE – BASE COURSE (M.3.11.3, TABLE A, BINDER COURSE)

B= 4" DENSE GRADE BASE COURSE (MHD 2.01.7)
C= 8" GRAVEL SUBBASE COURSE (MHD 1.03.1, PROCESSED GRAVEL FOR SUBBASE)

STANDARD DUTY BITUMINOUS PAVEMENT (1)
NOT TO SCALE

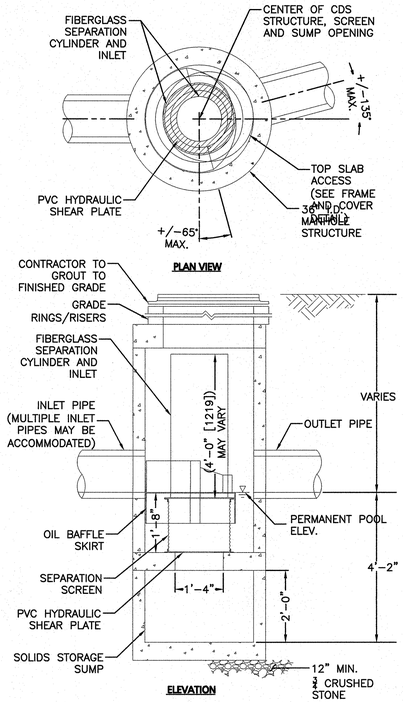

NOTES:
1. SEE PLAN FOR PIPE ALIGNMENT AND ELEVATIONS.
2. SUBMIT SHOP DRAWINGS FOR REVIEW AND APPROVAL.
3. INSTALL PER MANUFACTURER'S RECOMMENDATIONS.

WATER QUALITY UNITS - CONTECH CDS1515-3 (2)
NOT TO SCALE

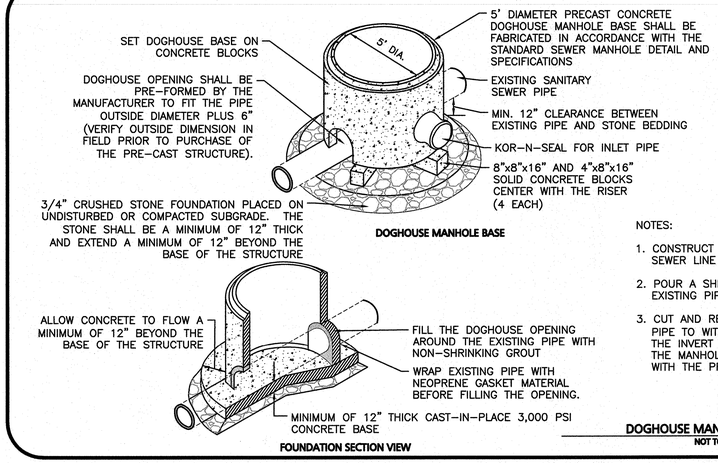

NOTES:
1. CONSTRUCT A FORMED INVERT FROM THE NEW SEWER LINE TO ALLOW FLOW TO THE EXISTING PIPE.
2. POUR A SHELF TO THE LOWER HALF OF THE EXISTING PIPE.
3. CUT AND REMOVE THE TOP HALF OF THE EXISTING PIPE TO WITHIN 6" OF THE MANHOLE WALLS AFTER THE INVERT AND SHELF HAVE BEEN FORMED AND THE MANHOLE HAS BEEN TESTED IN ACCORDANCE WITH THE PROJECT SPECIFICATIONS.

DOGHOUSE MANHOLE STRUCTURE (3)
NOT TO SCALE

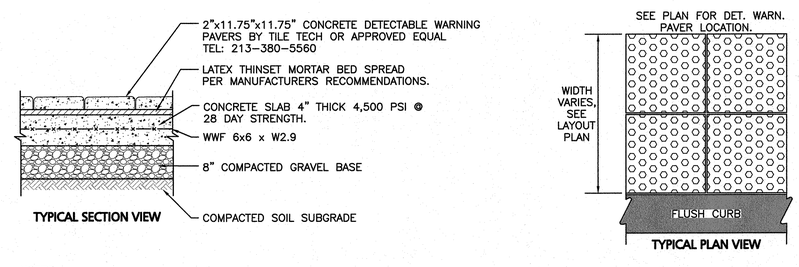

NOTES:
1. CONCRETE SLAB SHALL BE SLOPED 1.5% CROSS PITCH MAX TO PROVIDE COMPLETE SURFACE DRAINAGE. SEE GRADING PLAN & HANDICAP CURB CUT / CURB TRANSISTION DETAIL.
2. SLAB TO HAVE STEEL TROWEL AND FINE BROOM FINISH. DO NOT USE CURING COMPOUNDS. CONTRACTOR TO ADD EXPANSION JOINTS AND PREMOLDED FILLER AT EDGE OF TILES AND ADJACENT MATERIAL.
3. SET TILES FLUSH WITH ADJACENT MATERIALS.
4. SUBMIT SHOP DRAWINGS OF TILES AND SAMPLE FOR APPROVAL OF COLOR TO OWNER / ARCH.
5. INSTALL DETECTABLE WARNING PAVERS PER MANUFACTURER'S RECOMMENDATIONS OR DESIGN ENGINEER.
6. ALL DET. WARN. PAVERS SHALL COMPLY WITH ADA REGULATIONS.

DETECTABLE WARNING PAVERS (4)
NOT TO SCALE

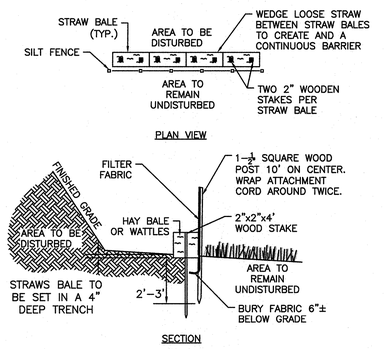

NOTE:
DEPTH TO BE 2' UNLESS POST IS TO BE SET IN PEAT THEN 3' OR GREATEST DEPTH POSSIBLE BY PUSHING BY HAND SHALL BE REQUIRED.

SILT FENCE AND HAY BALE DETAIL (5)
NOT TO SCALE

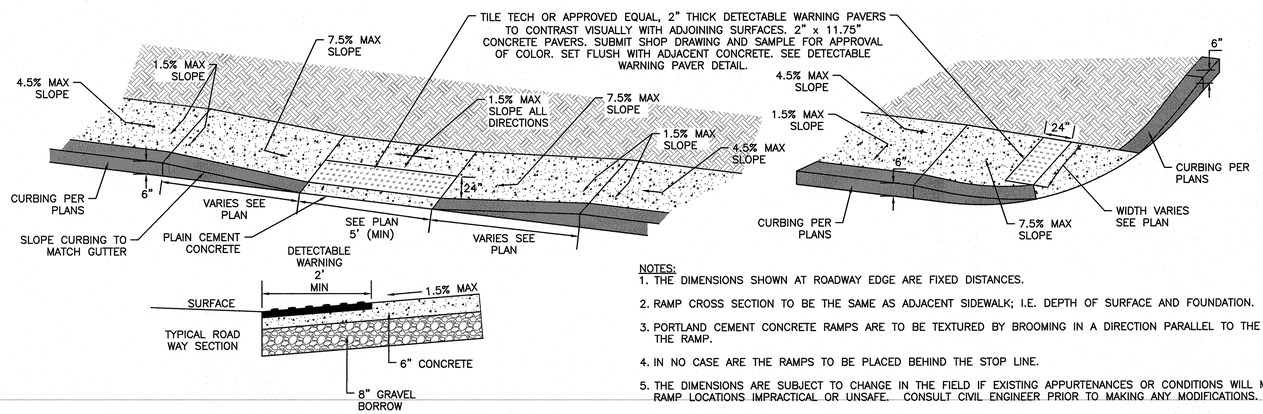

NOTES:
1. THE DIMENSIONS SHOWN AT ROADWAY EDGE ARE FIXED DISTANCES.
2. RAMP CROSS SECTION TO BE THE SAME AS ADJACENT SIDEWALK; I.E. DEPTH OF SURFACE AND FOUNDATION.
3. PORTLAND CEMENT CONCRETE RAMPS ARE TO BE TEXTURED BY BROOMING IN A DIRECTION PARALLEL TO THE LENGTH OF THE RAMP.
4. IN NO CASE ARE THE RAMPS TO BE PLACED BEHIND THE STOP LINE.
5. THE DIMENSIONS ARE SUBJECT TO CHANGE IN THE FIELD IF EXISTING APPURTENANCES OR CONDITIONS WILL MAKE THE RAMP LOCATIONS IMPRACTICAL OR UNSAFE. CONSULT CIVIL ENGINEER PRIOR TO MAKING ANY MODIFICATIONS.

ACCESSIBLE CURB CUT AND CURB TRANSITION (6)
NOT TO SCALE

APPROVED BY:
TOWN OF LEXINGTON PLANNING BOARD

DATE: _____

THIS PLAN IS SUBJECT TO A COVENANT
DATED _____
THIS PLAN IS SUBJECT TO A CERTIFICATE OF ACTION DATED _____
THIS PLAN IS SUBJECT TO A SPECIAL PERMIT
DATED _____

I _____ TOWN CLERK OF THE TOWN OF LEXINGTON, MASSACHUSETTS HEREBY CERTIFY THAT THE NOTICE OF APPROVAL OF THIS PLAN HAS BEEN RECEIVED AND RECORDED AT THIS OFFICE AND NO NOTICE OF APPEAL WAS RECEIVED DURING THE TWENTY DAYS NEXT AFTER SUCH RECEIPT AND RECORDING OF SAID NOTICE.

TOWN CLERK _____ DATE _____

COMMONWEALTH OF MASSACHUSETTS
CARLTON M. QUINN
CIVIL
No. 49123
REGISTERED PROFESSIONAL ENGINEER
5.18.22

PROFESSIONAL ENGINEER FOR
ALLEN & MAJOR ASSOCIATES, INC.

REV	DATE	DESCRIPTION

APPLICANT\OWNER:
12-18 HARTWELL OWNER, LLC. &
24 HARTWELL OWNER, LLC
C/O GREATLAND REALTY PARTNERS
ONE FEDERAL STREET, SUITE 1810
BOSTON, MA 02110

PROJECT:
DEFINITIVE
NON-RESIDENTIAL SUBDIVISION
12-18 & 24 HARWELL AVENUE
LEXINGTON, MA

PROJECT NO.	3021-02	DATE ISSUED:	5-18-2022
SCALE:	AS SHOWN	DWG. NAME:	CIVIL
DESIGNED BY:	DMR/SJL	CHECKED BY:	CMQ

PREPARED BY:

ALLEN & MAJOR ASSOCIATES, INC.
civil engineering ◆ land surveying
environmental consulting ◆ landscape architecture
www.allenmajor.com
100 COMMERCE WAY, SUITE 5
WOBURN MA 01801
TEL: (781) 935-6889
FAX: (781) 935-2896
WOBURN, MA ◆ LAKEVILLE, MA ◆ MANCHESTER, NH

THIS DRAWING HAS BEEN PREPARED IN DIGITAL FORMAT. CLIENT/CLIENT'S REPRESENTATIVE OR CONSULTANTS MAY BE PROVIDED COPIES OF DRAWINGS AND SPECIFICATIONS FOR HIS/HER INFORMATION AND/OR SPECIFIC USE ON THIS PROJECT. DUE TO THE POTENTIAL THAT THE PROVIDED INFORMATION MAY BE MODIFIED UNINTENTIONALLY OR OTHERWISE, ALLEN & MAJOR ASSOCIATES, INC. MAY REMOVE ALL INDICATION OF THE DOCUMENT'S AUTHORSHIP ON THE DIGITAL MEDIA. PRINTED REPRESENTATIONS OR PORTABLE DOCUMENT FORMAT OF THE DRAWINGS AND SPECIFICATIONS ISSUED SHALL BE THE ONLY RECORD COPIES OF ALLEN & MAJOR ASSOCIATES, INC.'S WORK PRODUCT.

DRAWING TITLE: DETAILS

SHEET No. C-504

Copyright©2022 Allen & Major Associates, Inc.
All Rights Reserved

N:\PROJECTS\3021-02\CIVIL\DRAWINGS\CURRENT\DEFINITIVE SUBDIVISION\C-3021-02_DETAILS.DWG

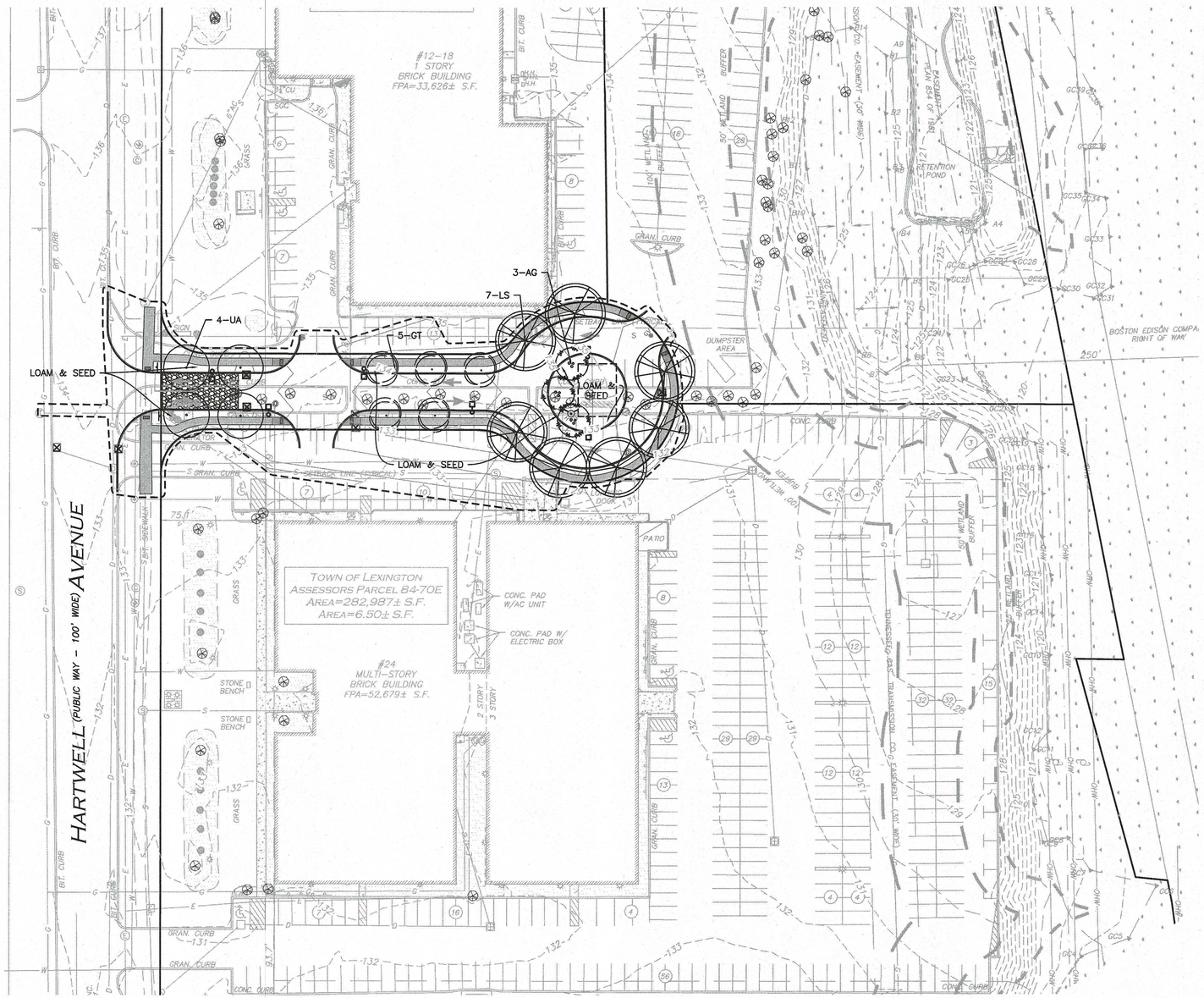

LEGEND

DECIDUOUS TREE

GENERAL NOTES

1. PROPERTY LINE AND EXISTING SITE CONDITIONS INFORMATION SHOWN HEREON IS TAKEN FROM A PLAN ENTITLED "ALTA/ACSM LAND TITLE SURVEY – 24 HARTWELL AVENUE IN LEXINGTON, MASSACHUSETTS (MIDDLESEX COUNTY)", DATED MARCH 17, 2010, PREPARED BY BSC GROUP, PREPARED FOR LEXINGTON MANAGEMENT INC., AND PROVIDED TO ALLEN & MAJOR ASSOCIATES BY GREATLAND REALTY TRUST. THE INFORMATION SHOWN IS SUBJECT TO FIELD VERIFICATION AND MAY BE UPDATED AS NEEDED.
2. VERTICAL DATUM IS NAVD 88.
3. EXISTING CONTOUR INTERVAL IS TWO FOOT (2').
4. CONTOURS SHOWN HEREON HAVE BEEN TRACED FROM TOWN OF LEXINGTON GIS.
5. WETLANDS SHOWN HEREON HAVE BEEN TRACED FROM MASS DEP WEBSITE.
6. THE LOCATIONS OF EXISTING UNDERGROUND UTILITIES ARE SHOWN IN AN APPROXIMATE WAY ONLY AND HAVE NOT BEEN INDEPENDENTLY VERIFIED BY THE OWNER OR IT'S REPRESENTATIVE. THE CONTRACTOR SHALL DETERMINE THE EXACT LOCATION OF ALL EXISTING UTILITIES BEFORE COMMENCING WORK, AND AGREES TO BE FULLY RESPONSIBLE FOR ANY AND ALL DAMAGES WHICH MIGHT BE OCCASIONED BY THE CONTRACTOR'S FAILURE TO EXACTLY LOCATE AND PRESERVE ANY AND ALL UNDERGROUND UTILITIES.
7. THE INFORMATION SHOWN ON THIS PLAN IS THE SOLE PROPERTY OF ALLEN & MAJOR ASSOCIATES, INC. IT'S INTENDED USE IS TO PROVIDE INFORMATION. ANY ALTERATION, MISUSE, OR RECALCULATION OF INFORMATION OR DATA WITHOUT THE EXPRESSED, WRITTEN CONSENT OF ALLEN & MAJOR ASSOCIATES, INC. IS STRICTLY PROHIBITED.
8. THE TOWN OF LEXINGTON WILL COORDINATE WITH THE APPLICANT/OWNER REGARDING FUTURE CONNECTION OF MAGUIRE ROAD SIDEWALK AND EXACT LOCATION OF CONNECTION TO THE SUBJECT SITE.
9. THE PURPOSE OF THIS PLAN IS TO CREATE A SUBDIVISION ROAD AND THREE PROPOSED LOTS, LOTS 1, 2 AND LOT 3.
10. ABBREVIATION "NR" SHALL SIGNIFY NO REQUIREMENT WITH REGARDS TO ZONING DIMENSIONAL REQUIREMENTS.
11. PROPOSED DRIVEWAY INCORPORATES A 50' WIDE RIGHT-OF-WAY, A 24' WIDE PAVED DRIVEWAY AND A 60' RADIUS CUL-DE-SAC BULB.
12. SEE SHEET L-501 FOR NOTES AND DETAILS.

GRAPHIC SCALE

40 0 20 40 80 160

(IN FEET)
1 inch = 40 ft.

PLANTING SCHEDULE

	KEY	QTY	BOTANICAL NAME	COMMON NAME	SIZE	SPACING	COMMENTS
DECIDUOUS SHADE AND FLOWERING TREES							
*	AG	3	AMELANCHIER X GRANDIFLORA 'AUTUMN BRILLIANCE'	AUTUMN BRILLIANCE SERVICEBERRY	10–12' HT.	AS SHOWN	B&B, MULTISTEM
*	GT	5	GLEDITSIA TRIACANTHOS V. INERMIS	HONEYLOCUST	3" CAL.	AS SHOWN	B&B
*	LS	7	LIQUIDAMBAR STYRACIFLUA	SWEET GUM	3" CAL.	AS SHOWN	B&B
*	UA	4	ULMUS AMERICANA 'PRINCETON'	PRINCETON AMERICAN ELM	3" CAL.	AS SHOWN	B&B
*	DENOTES NATIVE SPECIES						
	NOTE: ALL TREES TO MEET THOSE LISTED IN THE LEXINGTON 2019 TREE MANUAL						
	16 TREES REMOVED						
	0 TREES TO REMAIN						
	19 TREES PROPOSED						

TOWN OF LEXINGTON ZONING SUMMARY - LANDSCAPE

REGULATION	ITEM	REQUIRED / ALLOWED	PROPOSED
SECTION 175–7.0	REQUIRED IMPROVEMENTS AND DESIGN STANDARDS		
7.6 B. (1)	TREES SHOULD BE PLANTED WITHIN THE RIGHT-OF-WAY'S PLANTING STRIP(S) AND SPACED BETWEEN 27 FEET AND 35 FEET APART ON CENTER.	27 FEET AND 35 FEET APART ON CENTER	35 FEET ON CENTER
7.6 B. (2) (b)	NO MORE THAN 50% OF ANY ONE GENUS MAY BE PROPOSED.	<50% OF ANY ONE GENUS	FOUR (4) SPECIES PROPOSED
7.6 B. (2) (d)	BE A MINIMUM SIZE OF THREE INCHES IN CALIPER, MEASURED FOUR FEET FROM THE GROUND LEVEL, AND EIGHT TO 10 FEET OF HEIGHT IN PLACE.	THREE INCHES IN CALIPER	3" CALIPER PROPOSED
7.6 C.	CUL-DE-SAC PLANTINGS. THE CENTER ISLAND OF A CUL-DE-SAC MUST BE LANDSCAPED.	LANDSCAPE CENTER CUL-DE-SAC.	LANDSCAPE CENTER CUL-DE-SAC.

APPROVED BY:
TOWN OF LEXINGTON PLANNING BOARD

DATE: _____

THIS PLAN IS SUBJECT TO A COVENANT
DATED _____

THIS PLAN IS SUBJECT TO A CERTIFICATE OF
ACTION DATED _____

THIS PLAN IS SUBJECT TO A SPECIAL PERMIT
DATED _____

I _____, TOWN CLERK OF THE TOWN OF LEXINGTON, MASSACHUSETTS HEREBY CERTIFY THAT THE NOTICE OF APPROVAL OF THIS PLAN HAS BEEN RECEIVED AND RECORDED AT THIS OFFICE AND NO NOTICE OF APPEAL WAS RECEIVED DURING THE TWENTY DAYS NEXT AFTER SUCH RECEIPT AND RECORDING OF SAID NOTICE.

TOWN CLERK _____ DATE _____

MASSACHUSETTS REGISTERED LANDSCAPE ARCHITECT
Jacqueline B. Yanez
NO. 1526
5-4-2022

PROFESSIONAL LANDSCAPE ARCHITECT FOR ALLEN & MAJOR ASSOCIATES, INC.

REV	DATE	DESCRIPTION

APPLICANT\OWNER:
12-18 HARTWELL OWNER, LLC. &
24 HARTWELL OWNER, LLC
C/O GREATLAND REALTY PARTNERS
ONE FEDERAL STREET, SUITE 1810
BOSTON, MA 02110

PROJECT:
DEFINITIVE
NON-RESIDENTIAL SUBDIVISION
12-18 & 24 HARWELL AVENUE
LEXINGTON, MA

PROJECT NO.	3021-02	DATE ISSUED:	5-18-2022
SCALE:	1" = 40'	DWG. NAME:	CIVIL
DESIGNED BY:	DMR/SJL	CHECKED BY:	CMQ

PREPARED BY:

ALLEN & MAJOR ASSOCIATES, INC.
civil engineering ◆ land surveying
environmental consulting ◆ landscape architecture
www.allenmajor.com
100 COMMERCE WAY, SUITE 5
WOBURN MA 01801
TEL: (781) 935-6889
FAX: (781) 935-2896
WOBURN, MA ◆ LAKEVILLE, MA ◆ MANCHESTER, NH

THIS DRAWING HAS BEEN PREPARED IN DIGITAL FORMAT. CLIENT/CLIENT'S REPRESENTATIVE OR CONSULTANTS MAY BE PROVIDED COPIES OF DRAWINGS AND SPECIFICATIONS FOR HIS/HER INFORMATION AND/OR SPECIFIC USE ON THIS PROJECT. DUE TO THE POTENTIAL THAT THE PROVIDED INFORMATION MAY BE MODIFIED UNINTENTIONALLY OR OTHERWISE, ALLEN & MAJOR ASSOCIATES, INC. MAY REMOVE ALL INDICATION OF THE DOCUMENT'S AUTHORSHIP ON THE DIGITAL MEDIA. PRINTED REPRESENTATIONS OR PORTABLE DOCUMENT FORMAT OF THE DRAWINGS AND SPECIFICATIONS ISSUED SHALL BE THE ONLY RECORD COPIES OF ALLEN & MAJOR ASSOCIATES, INC.'S WORK PRODUCT.

DRAWING TITLE: LANDSCAPE PLAN

SHEET No. L-101

Copyright©2022 Allen & Major Associates, Inc.
All Rights Reserved

N:\PROJECTS\3021-02\CIVIL\DRAWINGS\CURRENT\DEFINITIVE SUBDIVISION\L-3021-02_LANDSCAPE.DWG

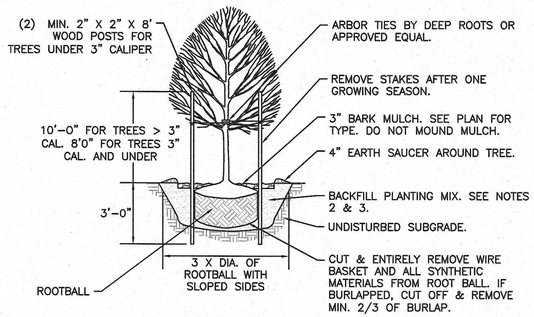

SECTION VIEW

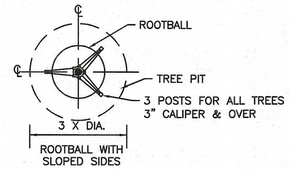

PLAN VIEW

NOTES:

1. ALL TREES SHALL HAVE THE SAME RELATIONSHIP TO FINISH GRADE AFTER PLANTING AS THEY HAD AT THE ORIGINAL NURSERY SETTING. ROOT FLARE SHALL BE 2" ABOVE FINISH GRADE. REMOVE SOIL FROM TRUNK FLARE OF TREE TO DETERMINE ACTUAL ROOTBALL AREA.
2. BACKFILL WITH PLANTING MIX. PLANT MIX TO BE: 50% NATIVE TOPSOIL, 20% BLENDED AND GROUND COMPOST (LEAVES & ORGANIC MATERIAL, NO ASH OR TOXIC MATERIALS) 20% PEAT MOSS, 10% SAND.
3. ADD MYCORRHIZA SOIL ADDITIVES AND SLOW RELEASE FERTILIZER WHEN PLANT HOLES ARE 50% FILLED AND WATER THOROUGHLY AT COMPLETION.

DECIDUOUS TREE
NOT TO SCALE
1

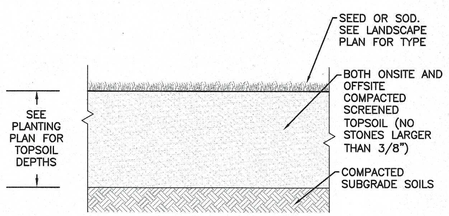

TEXTURE CLASS	% OF TOTAL WEIGHT
SAND	45% – 65%
SILT	15% – 35%
CLAY	5% – 20%

SIEVE	% PASSING
3/8"	100
NO. 4	85–100
NO. 40	60–85
NO. 100	38–60
NO. 200	28–40

NOTES:

1. TOP OF LOAM (TOPSOIL) IS FINISH GRADE.
2. ALL TOPSOIL (BOTH ONSITE AND OFFSITE SOURCES) SHALL BE COMPOSED OF A NATURAL, FERTILE, FRIABLE SOIL TYPICAL OF CULTIVATED TOPSOILS OF THE LOCALITY. SOIL SHALL BE SUITABLE FOR THE GERMINATION OF SEEDS AND SUPPORT OF VEGETATIVE GROWTH, WITH ADDITIVES, IF REQUIRED, TO ACHIEVE PARTICLE DISTRIBUTION AND ORGANIC CONTENT BELOW. TOPSOIL SHALL BE TAKEN FROM A WELL–DRAINED, ARIABLE SITE, FREE OF SUBSOIL, LARGE STONES, EARTH CLODS, STICKS, TRASH, STUMPS, CLAY LUMPS, ROOTS, OTHER OBJECTIONABLE, EXTRANEOUS MATTER OR DEBRIS NOR CONTAIN TOXIC SUBSTANCES.
3. THE CONTRACTOR SHALL PROVIDE THE OWNER / LANDSCAPE ARCHITECT WITH TOPSOIL TEST RESULTS (RECOMMEND UMASS AMHERST SOIL TESTING LAB) FOR APPROVAL PRIOR TO OBTAINING AND PLACING THE SOIL. IF THE PLANTING SOIL (BOTH ONSITE AND OFFSITE SOURCES) DOES NOT FALL WITHIN THE REQUIRED SIEVE ANALYSIS, TEXTURAL CLASS, ORGANIC CONTENT, OR PH RANGE, IT SHALL BE ADJUSTED TO MEET THE SPECIFICATIONS THROUGH THE ADDITION OF SAND, COMPOST, LIMESTONE, OR ALUMINUM SULFATE TO BRING IT WITHIN THE SPECIFIED LIMITS AT NO ADDITIONAL COST TO THE OWNER.
4. TOPSOIL SHALL HAVE A PH VALUE BETWEEN 5.5 AND 6.5. TOPSOIL SHALL CONTAIN BETWEEN 4% AND 8% ORGANIC MATTER OF TOTAL DRY WEIGHT AND SHALL CONFORM TO THE FOLLOWING GRADATION AND TEXTURE CLASS ABOVE.

TOPSOIL FOR LAWN & TREES
NOT TO SCALE
2

LANDSCAPE NOTES

1. ALL WORK SHALL BE IN ACCORDANCE WITH THE REQUIREMENTS OF THE TOWN OF LEXINGTON.
2. PLANTING PLAN IS DIAGRAMMATIC IN NATURE. FINAL PLACEMENT OF PLANTS TO BE APPROVED BY THE LANDSCAPE ARCHITECT IN THE FIELD.
3. THE CONTRACTOR SHALL BE RESPONSIBLE FOR CONTACTING ALL UTILITY COMPANIES, ANY PERMITTING AGENCIES, AND "DIG–SAFE" (1–888–344–7233) AT LEAST 72 HOURS IN ADVANCE OF ANY WORK THAT WILL REQUIRE EXCAVATION. CONTRACTOR SHALL NOTIFY THE OWNERS REPRESENTATIVE OF NAY CONFLICTS IN WRITING.
4. NO PLANT MATERIAL SHALL BE INSTALLED UNTIL ALL GRADING AND CONSTRUCTION HAS BEEN COMPLETED IN THE IMMEDIATE AREA.
5. ANY TREES NOTED AS "SEAL OR SELECTED SPECIMEN" SHALL BE TAGGED AND SEALED BY THE LANDSCAPE ARCHITECT.
6. ALL TREES SHALL BE BALLED AND BURLAPPED (B&B) UNLESS OTHERWISE NOTED OR APPROVED BY THE OWNER'S REPRESENTATIVE AND LANDSCAPE ARCHITECT.
7. CONTRACTOR SHALL VERIFY QUANTITIES SHOWN ON PLANT LIST. QUANTITIES SHOWN ON PLANS SHALL GOVERN OVER PLANT LIST.
8. ANY PROPOSED PLANT SUBSTITUTIONS MUST BE APPROVED IN WRITING BY OWNER'S REPRESENTATIVE AND LANDSCAPE ARCHITECT.
9. ALL PLANT MATERIALS INSTALLED SHALL MEET THE GUIDELINES ESTABLISHED BY THE AMERICAN STANDARD FOR NURSERY STOCK PUBLISHED BY AMERICANHORT (LATEST EDITION).
10. ALL PLANT MATERIALS SHALL BE GUARANTEED FOR ONE YEAR FOLLOWING DATE OF ACCEPTANCE.
11. ALL DISTURBED AREAS NOT OTHERWISE NOTED SHALL RECEIVE 6" OF SUITABLE LOAM & SEED. LAWNS WITH 3:1 OR GREATER SLOPES SHALL BE PROTECTED WITH AN EROSION CONTROL BLANKET.
12. ANY FALL TRANSPLANTING HAZARD PLANTS SHALL BE DUG IN THE SPRING AND STORED FOR FALL PLANTING.
13. TREES SHALL HAVE A MINIMUM CALIPER AS INDICATED ON THE PLANTING SCHEDULE TAKEN ONE FOOT ABOVE THE ROOT CROWN.
14. ALL PLANT BEDS AND TREE SAUCERS TO RECEIVE 3" OF PINE BARK MULCH. GROUNDCOVER AREAS SHALL RECEIVE 1" OF PINE BARK MULCH.
15. ALL DECIDUOUS TREES ADJACENT TO WALKWAYS AND ROADWAYS SHALL HAVE A BRANCHING PATTERN TO ALLOW FOR A MINIMUM OF 7' OF CLEARANCE BETWEEN THE GROUND AND THE LOWEST BRANCH.
16. ALL TREE STAKES SHALL BE STAINED DARK BROWN.
17. CONTRACTOR RESPONSIBLE FOR WATERING AND RESEEDING OF BARE SPOTS UNTIL A UNIFORM STAND OF VEGETATION IS ESTABLISHED AND ACCEPTED.
18. SOIL SAMPLES, TESTS, AND SHOP DRAWINGS SHALL BE PROVIDED TO THE LANDSCAPE ARCHITECT OR THE OWNER FOR APPROVAL PRIOR TO CONSTRUCTION.

LOAM AND SEED NOTES:

CONTRACTOR SHALL SEED ALL DISTURBED AREAS NOT NOTED TO RECEIVE OTHER MATERIALS, AND AT AREAS SHOWN ON THE PLAN PER SPECIFICATIONS BELOW

SCIENTIFIC NAME	COMMON NAME	PROPORTION BY WEIGHT	PERCENT PURITY	PERCENT GERMINATION
FESTUCA RUBRA "RUBRA"	CREEPING RED FESCUE	37%	95%	90%
PAO PRAENTENSIS "BARON"	BARON KENTUCKY BLUEGRASS	40%	85%	90%
LOLIUM PERENNE "PALMER"	PALMER PERENNIAL RYEGRASS	15%	95%	90%
FESTUCA RUBRA COMMUTATA WILMA	WILMA CHEWINGS	8%	95%	80%

1. SEED TO BE SPREAD AT MINIMUM RATE OF 5 LBS. PER 1000 SQ. FT.
2. SEEDING TO BE COMPLETED "IN SEASON" BETWEEN APRIL 1 TO JUNE 15 OR AUGUST 15 TO OCTOBER 1, EXCEPT FOR RESEEDING OF BARE SPOTS. IF UNABLE TO SEED WITHIN THESE TIMEFRAMES, CONTRACTOR TO INSTALL EROSION CONTROL MATS ON ALL SLOPES 3:1 AND OVER, HYDROSEED ALL EXPOSED AREAS, ADD SOIL STABILIZER "FLUX TERRA HP–FGM SOIL STABILIZER" AS MANUFACTURED BY "PROFILE" TO HYDROSEED (AT RATE OF 3,000 LBS PER ACRE). CONTRACTOR TO COMPLETE ALL ABOVE "OUT OF SEASON" REQUIREMENTS AND THEN ALSO BE RESPONSIBLE FOR RE–GRADING AND RE–SEEDING ALL DISTURBED, ERODED, OR BARE SPOTS WITHIN NEXT CLOSEST PLANTING SEASON IN FALL OR SPRING.
3. COMMERCIAL FERTILIZER SHALL BE APPLIED AT THE RATE OF 25 POUNDS PER 1000 SQ. FT. OR AS RECOMMENDED BY THE TESTING AGENCY. LIME TO BE SPREAD AT THE RATE OF 100 POUNDS PER 1000 SQ. FT OR AS RECOMMENDED BY THE TESTING AGENCY. COMMERCIAL FERTILIZER SHALL BE A COMPLETE FERTILIZER CONTAINING AT LEAST 50% OF THE NITROGEN OF WHICH IS DERIVED FROM NATURAL ORGANIZE SOURCES OF UREAFORM. IT SHALL CONTAIN THE FOLLOWING PERCENTAGES BY WEIGHT: NITROGEN (N) 10%, PHOSPHORUS (P) 6%, POTASH (K) 4%. LIME SHALL BE AN APPROVED AGRICULTURAL LIMESTONE CONTAINING NOT LESS THAN 85% OF TOTAL CARBONATES. LIMESTONE SHALL BE GROUND TO SUCH FINENESS THAT 50% WILL PASS A 100 MESH SIEVE AND 90% WILL PASS THROUGH A 20 MESH SIEVE.
4. LAWN AREAS TO BE SEEDED BY SOWING EVENLY WITH AN APPROVED MECHANICAL SEEDER AT THE RATE OF TEN POUNDS PER 1000 SQUARE FEET.
5. CONTRACTOR RESPONSIBLE FOR WATERING, MOWING, AND RESEEDING OF LAWN BARE SPOTS UNTIL A UNIFORM, HEALTHY STAND OF GRASS IS ESTABLISHED AND ACCEPTED.

GENERAL NOTES

1. PROPERTY LINE AND EXISTING SITE CONDITIONS INFORMATION SHOWN HEREON IS TAKEN FROM A PLAN ENTITLED "ALTA/ACSM LAND TITLE SURVEY – 24 HARTWELL AVENUE IN LEXINGTON, MASSACHUSETTS (MIDDLESEX COUNTY)", DATED MARCH 17, 2010, PREPARED BY BSC GROUP, PREPARED FOR LEXINGTON MANAGEMENT INC., AND PROVIDED TO ALLEN & MAJOR ASSOCIATES BY GREATLAND REALTY TRUST. THE INFORMATION SHOWN IS SUBJECT TO FIELD VERIFICATION AND MAY BE UPDATED AS NEEDED.
2. VERTICAL DATUM IS NAVD 88.
3. EXISTING CONTOUR INTERVAL IS TWO FOOT (2').
4. CONTOURS SHOWN HEREON HAVE BEEN TRACED FROM TOWN OF LEXINGTON GIS.
5. WETLANDS SHOWN HEREON HAVE BEEN TRACED FROM MASS DEP WEBSITE.
6. THE LOCATIONS OF EXISTING UNDERGROUND UTILITIES ARE SHOWN IN AN APPROXIMATE WAY ONLY AND HAVE NOT BEEN INDEPENDENTLY VERIFIED BY THE OWNER OR IT'S REPRESENTATIVE. THE CONTRACTOR SHALL DETERMINE THE EXACT LOCATION OF ALL EXISTING UTILITIES BEFORE COMMENCING WORK, AND AGREES TO BE FULLY RESPONSIBLE FOR ANY AND ALL DAMAGES WHICH MIGHT BE OCCASIONED BY THE CONTRACTOR'S FAILURE TO EXACTLY LOCATE AND PRESERVE ANY AND ALL UNDERGROUND UTILITIES.
7. THE INFORMATION SHOWN ON THIS PLAN IS THE SOLE PROPERTY OF ALLEN & MAJOR ASSOCIATES, INC. IT'S INTENDED USE IS TO PROVIDE INFORMATION. ANY ALTERATION, MISUSE, OR RECALCULATION OF INFORMATION OR DATA WITHOUT THE EXPRESSED, WRITTEN CONSENT OF ALLEN & MAJOR ASSOCIATES, INC. IS STRICTLY PROHIBITED.
8. THE TOWN OF LEXINGTON WILL COORDINATE WITH THE APPLICANT/OWNER REGARDING FUTURE CONNECTION OF MAGUIRE ROAD SIDEWALK AND EXACT LOCATION OF CONNECTION TO THE SUBJECT SITE.
9. THE PURPOSE OF THIS PLAN IS TO CREATE A SUBDIVISION ROAD AND THREE PROPOSED LOTS, LOTS 1, 2 AND LOT 3.
10. ABBREVIATION "NR" SHALL SIGNIFY NO REQUIREMENT WITH REGARDS TO ZONING DIMENSIONAL REQUIREMENTS.
11. PROPOSED DRIVEWAY INCORPORATES A 50' WIDE RIGHT–OF–WAY, A 24' WIDE PAVED DRIVEWAY AND A 60' RADIUS CUL–DE–SAC BULB.

APPROVED BY:
TOWN OF LEXINGTON PLANNING BOARD

DATE: _____

THIS PLAN IS SUBJECT TO A COVENANT DATED _____

THIS PLAN IS SUBJECT TO A CERTIFICATE OF ACTION DATED _____

THIS PLAN IS SUBJECT TO A SPECIAL PERMIT DATED _____

I _____, TOWN CLERK OF THE TOWN OF LEXINGTON, MASSACHUSETTS HEREBY CERTIFY THAT THE NOTICE OF APPROVAL OF THIS PLAN HAS BEEN RECEIVED AND RECORDED AT THIS OFFICE AND NO NOTICE OF APPEAL WAS RECEIVED DURING THE TWENTY DAYS NEXT AFTER SUCH RECEIPT AND RECORDING OF SAID NOTICE.

TOWN CLERK _____ DATE _____

PROFESSIONAL LANDSCAPE ARCHITECT FOR ALLEN & MAJOR ASSOCIATES, INC.

REV	DATE	DESCRIPTION

APPLICANT\OWNER:
12-18 HARTWELL OWNER, LLC. &
24 HARTWELL OWNER, LLC
C/O GREATLAND REALTY PARTNERS
ONE FEDERAL STREET, SUITE 1810
BOSTON, MA 02110

PROJECT:
DEFINITIVE
NON-RESIDENTIAL SUBDIVISION
12-18 & 24 HARWELL AVENUE
LEXINGTON, MA

PROJECT NO.	3021-02	DATE ISSUED:	5-18-2022
SCALE:	AS SHOWN	DWG. NAME:	CIVIL
DESIGNED BY:	DMR/SJL	CHECKED BY:	CMQ

PREPARED BY:

ALLEN & MAJOR ASSOCIATES, INC.
civil engineering ◆ land surveying
environmental consulting ◆ landscape architecture
www.allenmajor.com
100 COMMERCE WAY, SUITE 5
WOBURN MA 01801
TEL: (781) 935-6889
FAX: (781) 935-2896

WOBURN, MA ◆ LAKEVILLE, MA ◆ MANCHESTER, NH

THIS DRAWING HAS BEEN PREPARED IN DIGITAL FORMAT. CLIENT/CLIENT'S REPRESENTATIVE OR CONSULTANTS MAY BE PROVIDED COPIES OF DRAWINGS AND SPECIFICATIONS FOR HIS/HER INFORMATION AND/OR SPECIFIC USE ON THIS PROJECT. DUE TO THE POTENTIAL THAT THE PROVIDED INFORMATION MAY BE MODIFIED UNINTENTIONALLY OR OTHERWISE, ALLEN & MAJOR ASSOCIATES, INC. MAY REMOVE ALL INDICATION OF THE DOCUMENT'S AUTHORSHIP ON THE DIGITAL MEDIA. PRINTED REPRESENTATIONS OR PORTABLE DOCUMENT FORMAT OF THE DRAWINGS AND SPECIFICATIONS ISSUED SHALL BE THE ONLY RECORD COPIES OF ALLEN & MAJOR ASSOCIATES, INC.'S WORK PRODUCT.

DRAWING TITLE: LANDSCAPE DETAILS

SHEET No. L-501

Copyright©2022 Allen & Major Associates, Inc.
All Rights Reserved

N:\PROJECTS\3021-02\CIVIL\DRAWINGS\CURRENT\DEFINITIVE SUBDIVISION\L-3021-02_LANDSCAPE.DWG

COVENANT

12-18 Hartwell Owner LLC & 24 Hartwell Owner LLC c/o Greatland Realty Partners (the "Applicant") submitted an application to the Lexington Planning Board (the "Board") on May 18, 2022, for the approval of a plan entitled "Plans for Definitive Non-Residential Subdivision of Land", 12-18 & 24 Hartwell Avenue Lexington, Massachusetts, Prepared for Greatland Realty Partners . dated May 18, 2022 prepared by Allen & Major Associates, Inc., Woburn, Massachusetts.

In consideration of the Lexington Planning Board approving said plan without requiring a performance bond or other surety, and in consideration of one dollar in hand paid, receipt whereof is hereby acknowledged, the Applicant, who is the owner of all the land included in the aforesaid subdivision, represents, covenants and agrees with the Town pursuant to Massachusetts General Law, Chapter 41, Section 81U, as amended as follows:

1. Applicant is the owner in fee simple of all the land included in the aforesaid subdivision, and there are no mortgages of record or otherwise on any of said land.

2. No lot shall be conveyed until the construction of ways and the installation of municipal services have been approved to serve such lot in accordance with any covenants, conditions, agreements, terms, and conditions specified in the following:

a. The Application for Approval, dated May 18, 2022, as qualified by the definitive plan as approved.

b. The Planning Board's Development Regulations governing this development.

c. The definitive plan as approved and condition as outlined in the Planning Board's Certificate of Action granted on June 29, 2022, submitted to the Town Clerk on July 11, 2022.

e. Other document(s) specifying construction to be completed, namely:

It is understood and agreed that the lots within the development shall, respectively, be released from the foregoing conditions only upon the recording of a written release executed by a majority of the Board specifically enumerating the lots to be released.

3. This Covenant shall be binding upon and inure to the benefit of the successors and assigns of the Applicant. It is understood and agreed that this Covenant shall run with the land included in the aforesaid subdivision and shall operate as a restriction upon said land.

4. The ways and municipal services required to serve the lots in said subdivision shall be installed and constructed as shown on the definitive plan and in accordance with the Subdivision Regulations adopted by the Board, with such modifications or conditions, if any, as have been imposed by the Board, before such lot may be conveyed other than by a mortgage deed; provided that a mortgagee who acquires title to the mortgaged premises by foreclosure or otherwise and any succeeding owner of such premises or part thereof may sell any such lot subject to the limitation

that no lot shall be conveyed until such ways and services have been provided to serve such lot; and provided further that nothing herein shall be deemed to prohibit a conveyance by a single

deed, subject to this Covenant, of either the entire parcel of land shown on said subdivision plan or of all lots shown on such plan not previously released by the Board.

5. Reference to this Covenant shall be entered upon said plan and this Covenant shall be recorded when said plan is recorded.

6. This Covenant shall take effect upon the endorsement of said plan and shall promptly be recorded with the Middlesex South Registry District of the Land Court by the Applicant with the appropriate marginal reference to the Covenant placed on the plan.

7. Upon final completion of the construction of ways and installation of municipal services as specified herein, in or within four (4) years, the Board shall release this covenant by an appropriate instrument duly recorded. Failure to complete construction and installation within the time specified herein, or such later date as may be specified by vote of the Board with a written concurrence by the Applicant, shall result in the automatic rescission of the approval of the plan.

8. Lots within the subdivision may be released from the foregoing conditions only upon the recording of a written release executed by a majority of the Planning Board and specifically enumerating the lots to be released thereunder.

9. Title references for the premises are as follows:

Executed as a sealed instrument this____day of , 2022.

Applicant

By:

_____
Teri Ford,
Director of Development of Greatland Realty Partners

_____ _____
Signature of Planning Board Member

_____ _____
Planning Board Member's Name Printed

_____
Signature of Planning Board Member

_____
Planning Board Member's Name Printed

_____
Signature of Planning Board Member

_____
Planning Board Member's Name Printed

_____
Signature of Planning Board Member

_____
Planning Board Member's Name Printed

_____
Signature of Planning Board Member

_____
Planning Board Member's Name Printed

Signatures of a Majority of the Members of the Planning Board of the Town of Lexington

COMMONWEALTH OF MASSACHUSETTS

Middlesex, ss _____, 2022

On this day of , 2022, before me, the undersigned notary public, personally appeared Teri Ford, Director of Development as aforesaid, who proved to me through satisfactory evidence of identification, which was a Massachusetts driver's license, to be the person whose name is signed on the preceding document and acknowledged to me that she signed it voluntarily for its stated purposes as her free act and deed and the free act and deed of Greatland Realty Partners.

_____
Notary Public
My commission expires:

COMMONWEALTH OF MASSACHUSETTS

Middlesex, ss _____, 2022

On this day of , 2022, before me, the undersigned notary public, personally appeared Robert D. Peters, Planning Board member as aforesaid, who proved to me through satisfactory evidence of identification, which was a Massachusetts driver's license, to be the person whose name is signed on the preceding document and acknowledged to me that it was signed it voluntarily for its stated purposes as a Lexington Planning Board member.

_____
Notary Public
My commission expires:

COMMONWEALTH OF MASSACHUSETTS

Middlesex, ss _____, 2022

On this day of , 2022, before me, the undersigned notary public, personally appeared Charles Hornig, Planning Board as aforesaid, who proved to me through satisfactory evidence of identification, which was a Massachusetts driver's license, to be the person whose name is signed on the preceding document and acknowledged to me that it was signed it voluntarily for its stated purposes as a Lexington Planning Board member.

_____
Notary Public
My commission expires:

COMMONWEALTH OF MASSACHUSETTS

Middlesex, ss _____, 2022

On this day of , 2022, before me, the undersigned notary public, personally

appeared Melanie Thompson, Planning Board as aforesaid, who proved to me through satisfactory evidence of identification, which was a Massachusetts driver's license, to be the person whose name is signed on the preceding document and acknowledged to me that it was signed it voluntarily for its stated purposes as a Lexington Planning Board member.

_____
Notary Public
My commission expires:

COMMONWEALTH OF MASSACHUSETTS

Middlesex, ss _____, 2022

On this day of , 2022, before me, the undersigned notary public, personally appeared Robert Creech, Planning Board as aforesaid, who proved to me through satisfactory evidence of identification, which was a Massachusetts driver's license, to be the person whose name is signed on the preceding document and acknowledged to me that it was signed it voluntarily for its stated purposes as a Lexington Planning Board member.

_____
Notary Public
My commission expires:

COMMONWEALTH OF MASSACHUSETTS

Middlesex, ss _____, 2022

On this day of , 2022, before me, the undersigned notary public, personally

appeared Michael Schanbacher, Planning Board as aforesaid, who proved to me through satisfactory evidence of identification, which was a Massachusetts driver's license, to be the person whose name is signed on the preceding document and acknowledged to me that it was signed it voluntarily for its stated purposes as a Lexington Planning Board member.

_____
Notary Public
My commission expires:

AGENDA ITEM SUMMARY

LEXINGTON PLANNING BOARD

AGENDA ITEM TITLE:

17 Hartwell Ave. – Acceptance of performance guarantee and endorse Definitive Subdivision Plan for subdivision approved on June 29, 2022

PRESENTER:

Staff & Applicant: BP 17 Hartwell Ave LLC

ITEM NUMBER:

SUMMARY:

17 Hartwell Ave. – Acceptance of performance guarantee and endorse Definitive Subdivision Plan for subdivision approved on June 29, 2022. The 20-day appeal period has ended without an appeal. Board will be asked to accept the covenant and sign the final approved plan.

SUGGESTED MOTION:

Move to accept the submitted covenant for the definitive subdivision at 17 Hartwell Ave. and sign the Plan.

(board members will need to come to the office to sign the plan and covenant please)

FOLLOW-UP:

DATE AND APPROXIMATE TIME ON AGENDA:

8/17/2022

ATTACHMENTS:

Description	Type
Decision	Exhibit
Final Approved Plans	Exhibit
Draft Covenant	Exhibit

RECEIVED

2022 11 Jul, 9:50 am

TOWN CLERK

LEXINGTON MA

Town of Lexington
PLANNING BOARD
1625 Massachusetts Avenue
Lexington, MA 02420
Tel (781) 698-4560
planning@lexingtonma.gov
www.lexingtonma.gov/planning

Robert D. Peters, Chair
Michael Schanbacher, Vice Chair
Melanie Thompson, Clerk
Robert Creech, Member
Charles Hornig, Member
Michael Leon, Associate Member

DECISION OF THE LEXINGTON PLANNING BOARD
DEFINITIVE SUBDIVISION (17 Hartwell Ave.)

CERTIFICATE OF VOTE
17 HARTWELL AVENUE
(Assessor's Map 84, Lot 80A)

Date of Application: May 6, 2022
Date of Public Hearing: June 29, 2022
Date of Vote: June 29, 2022

DECISION

This is to certify that the Lexington Planning Board, acting within the provisions of M.G.L., Chapter 41, § 81U, at a meeting on June 29, 2022, by a vote of five (5) members in favor and none (0) opposed, voted to approve the Definitive Subdivision plan for a three (3) lot subdivision at 17 Hartwell Avenue as shown on the plans entitled "Definitive Subdivision Plans, 17 Hartwell Ave, Lexington, MA", dated April 29, 2022, prepared by VHB, consisting of 10 sheets including the cover page, filed with the Planning Office on May 6, 2022; subject to the terms and conditions of approval and the covenant to be given in said Section 81U and subject to the following terms and conditions imposed by the Lexington Planning Board.

PROJECT SUMMARY AND BACKGROUND

Application proposes three (3) lots on a subdivision cul-de-sac with a 24-25 ft. wide drive, landscaped center island, sidewalk, street trees, one new fire hydrant, and a subsurface infiltration stormwater management system. Presently, the 5.25-acre property contains a single-story brick building, and off-street surface parking.

A preliminary subdivision application was approved by the Planning Board on October 20, 2021.

STATEMENT OF FINDINGS

After having reviewed all the plans and reports filed by the Applicant and its representatives, and having considered the technical analysis, supplemental information provided during the course of the public hearing, correspondence and testimony from representatives from various boards, commissions, departments within Lexington, members of the public, and from all other interested parties, the Lexington Planning Board makes the following procedural findings and project findings:

Procedural Findings:

RECEIVED
2022 11 Jul, 9:51 am
TOWN CLERK
LEXINGTON MA

1. On May 6, 2022, an application was filed by or on behalf of BP 17 Hartwell, LLC. (hereinafter referred to as the "Applicant") with the Lexington Planning Board through the View Point Cloud Permit system PLAN-22-5 (hereinafter "Application") pursuant to M.G.L. Chapter 41, Section 81, and the Rules and Regulations Governing the Subdivision of Land in Lexington, Chapter 175, last revised on August 30, 2017.

2. Pursuant to M.G.L. Chapter 41, Sections 81K through 81G (hereinafter "Subdivision Control Law"), and the applicable provisions of the Rules and Regulations, the Planning Board caused notice of the public hearing to be published in the Lexington Minuteman, a newspaper of general circulation in Lexington, on June 9, 2022 and again on June 16, 2022. Notice of the public hearing was posted in the Lexington office of the Town Clerk on May 31, 2022 and continuing through the opening of the public hearing on June 29, 2022. Said notice of the public hearing was mailed postage prepaid to the applicant, property owner, and all abutters as prescribed in the Subdivision Control Law on May 31, 2022.

3. The Planning Board provided copies of the Application to other Lexington departments and officials, including, but not limited to, the Health Director/Assistant Director, Building Commissioner, Conservation Director, Assistant Town Engineer, Police Chief, Assistant Fire Chief, and Zoning Administrator.

4. The Board of Health filed their report to approve with no concerns on the Definitive Subdivision on June 14, 2022, pursuant to M.G.L. Chapter 41, Section 81U.

5. After notice and publication was provided pursuant to the applicable provisions of the Subdivision Control Law and the Board's Rules and Regulations, the public hearing on the Application commenced on June 29, 2022, on which date the Planning Board closed the public hearing. All Planning Board meetings and the public hearings were held remotely via Zoom, pursuant to c. 20 of the Acts of 2021 and c. 22 of the Acts of 2022 further extending the remote provisions until July 15, 2022. The Planning Board accepted public comments via Zoom.

6. Lexington Planning Board members Robert Peters, Michael Schanbacher, Melanie Thompson, Robert Creech, and Charles Hornig were present for all public hearings at which testimony was taken.

Project Findings:

1. The subject property consists of one 5.25-acre parcel of land shown on the Lexington Assessors' Map as 84, Lot 80A and located in the CM (Commercial Manufacturing) zoning district.

2. The Applicant proposes to divide the existing lot into three lots on a subdivision cul-de-sac with a 24-25 ft. wide drive, landscaped center island, sidewalks, street trees, one new fire hydrant, and a subsurface infiltration stormwater management system. The existing buildings and parking areas are to be removed.

3. On October 15, 2021, the Applicant filed a Preliminary Subdivision application as amended with the Town Clerk. The Lexington Planning Board voted to approve the Preliminary Subdivision with conditions on October 20, 2021, and issued a Preliminary approval on October 22, 2021. If Definitive Plan is approved and endorsed by the Planning Board, the land shown on this definitive subdivision

RECEIVED
2022 11 Jul, 9:51 am
TOWN CLERK
LEXINGTON MA

plan will be governed by the zoning bylaw in effect on October 15, 2021 for eight years from the date of endorsement of this definitive plan.

4. The Development, as modified by the conditions of this decision, will not present a public safety hazard to the town, or the surrounding properties.

WAIVERS

The Planning Board may waive any of its Rules and Regulations if the Board finds the waiver is in the public interest and not inconsistent with the intent and purpose of the Subdivision Control Law. No waivers are needed with the submitted plans and the Board did not grant any waivers with this application.

CONDITIONS

After the public hearing, the Lexington Planning Board by a vote of five (5) in favor and none (0) opposed, voted to approve the Definitive Subdivision for 17 Hartwell Avenue as described above, subject to the following conditions:

Prior to Plan Endorsement:

1. Prior to endorsement of the Definitive Plan, the Applicant shall provide a Performance Guarantee, in a manner acceptable to the Planning Board, and prior to the release of any lot or the issuance of any building permits for the construction of any buildings, to insure the required improvements related to the construction of the road and services will be constructed and installed in accordance with the approved Definitive Plan.

2. After notice from the Town Clerk of "No Appeal", the Applicant shall submit the final revised Definitive Subdivision Plan set including the Property Rights and Dimensional Standards Plan and the Street Layout and Profile Plan sheets, for endorsement by the Planning Board within 180 days of this approval in accordance with this Certificate of Vote. The Applicant shall record with the Registry and notify the Board in writing of the date, book, and page or document of the recording information. Failure to do so may result in recission of this Decision.

3. Following endorsement and prior to commencing any site work or construction related to this approval, the certificate of vote and any easements (including utility easements) and covenants must be recorded at the Registry with proof of recording the Definitive Subdivision Plan at the South Middlesex Country Registry of Deeds shall be submitted to the Lexington Planning Department.

4. All easement documents shall be provided to the Planning Board, staff, and Town Counsel for review and approval prior to recording at the Registry.

General Provisions Prior to Any Site Work and Construction:

5. If the Project, or any condition imposed by this decision, requires a permit, license, or other approval from any other board, committee or agency of Lexington or other regulatory agency of the

RECEIVED
2022 11 Jul, 10:01 am
TOWN CLERK
LEXINGTON MA

Commonwealth or the Federal government, the Applicant is responsible for filing the appropriate application. As proposed, Applicant is responsible for filing a Request for Determination of Applicability with the Conservation Commission and Stormwater Permit under the Stormwater Management Bylaw. If any condition of such permit is inconsistent with or modifies the approved Project Plans the Applicant shall make application to the Planning Board for amendment of this Decision, and the Planning Board shall consider such application in accordance with the requirements of M.G.L. Chapter 41, §81T & §81W and all applicable Planning Board Subdivision Regulations.

6. Applicant shall provide final revised and approved stormwater analysis report and Operation & Maintenance Plan to the Planning Department, Engineering, and Conservation Divisions prior to the start of any construction.

<u>During Construction:</u>

7. Project related construction shall comply with the current Lexington's General Bylaws Chapter 80 [Noise Control], for construction related activities with hours limited to 7:00 a.m. and 5:00 p.m. Monday through Friday and between 9:00 am and 5:00 pm on Saturdays. Operation is not permitted on Sundays and legal holidays.

8. The Department of Public Works shall be notified at least forty-eight hours in advance of any roadway, municipal service, and backfill of any underground utilities for inspections or utility connections.

9. Applicant shall perform daily clean up of construction debris, including soil on municipal streets within two-hundred yards from the entrance of the site drive caused by construction related to the project.

10. Construction and land disturbance activities, soil erosion and sedimentation to wetlands or resources areas shall be minimized by an active program meeting the requirements of the Lexington Conservation Commission, Department of Environmental Protection Best Management Practices, and the Stormwater Management Permit.

11. Applicant shall provide appropriate erosion control methods such as silt fences and straw wattles and organic hessian fabric burlap filled with compost and the stockpiles in case of a storm event, in addition to dust control requirements.

12. The Applicant is responsible for promptly repairing any damage caused to street pavement, signs, or other fixtures or features within the public right-of-way, after obtaining permission from the Department of Public Works. Such repairs shall be performed to Lexington Standards.

13. A copy of this Decision and the Project Plans shall be kept on the Project Site in a highly visible location at all times during construction.

<u>Continuing Conditions:</u>

14. Except as modified by the conditions and findings hereof, the Project shall comply with the final revised approved Definitive Plan Set, in all respects, and the Applicant shall pursue completion of the project with reasonable diligence and continuity. The subdivision and its construction shall comply in

RECEIVED
2022 11 Jul, 10:01 am
TOWN CLERK
LEXINGTON MA

all respects to the Subdivision Rules and Regulations unless specifically waived by a vote of the Planning Board and recorded in writing.

15. This approval is limited to a total of three (3) lots, regardless of the number of lots which could otherwise be developed and the road may not be extended without returning to the Planning Board for an amendment or modification pursuant to M.G.L. Chapter 41, § 81W. Further division of any lot created hereon, whether by ANR or any other method, is expressly prohibited, except that lots may be reconfigured, such that the total number of lots does not exceed three (3) lots. Any change in roadway or increase in number of lots requires a new subdivision filing, pursuant to §81T & §81W.

16. The Town is not responsible for non-emergency municipal services provided along the new road, including snow removal and recycling/trash service, unless street acceptance by Town Meeting.

17. Planning staff and members of the Planning Board and its agents shall be permitted access to the Project Site during construction with proper notification to the Applicant (and subject to any construction safety requirements), and shall have the right to gather all information, measurements, photographs or other materials needed to ensure compliance with the terms of this Decision, subject to applicable safety requirements.

18. A final as-built plan shall be submitted to the Planning Office, Engineering, and Building Commissioner prior to issuance of the Completion Certificate or release of the Performance Guarantee. The as-built plan shall be prepared and certified by a professional engineer and submitted as a PDF and CAD file. The "As Built" Plan shall indicate the stormwater system, parking, driveways, sidewalks and walkways, utilities, any lighting, storm drains, water mains and their appurtenances, etc. in material compliance with the approved project plans.

19. Any future change, modification or amendment to the final Definitive Plan as may be approved by the Planning Board shall be in accordance with the requirements of M.G.L. Chapter 41, § 81T & §81W and § 6.7 of the Board's Subdivision Regulations. No material alterations, or any changes shall be made in any plans, proposals or supporting documents, or site work without prior written approval from the Planning Board or their designee. Any request for a modification of this approval shall be made in writing the Planning Department for review and approval by the Planning Board and shall include a description of the proposed modification, reasons the modification is necessary, and any supporting documentation. Upon receipt of a request, the Planning Department may, in the first instance, authorize a minor modification to the site plans, or Planning staff may refer the matter to the Planning Board, which may consider and approve minor modifications at a regularly scheduled Planning Board meeting duly noticed. In the event the Board determines the change is major in nature (resulting in material changes such as newly impacted parcels), the Board shall consider the modification at a properly noticed public hearing.

20. The Applicant must complete construction of all ways and services within two (2) years of the date of Planning Board endorsement of the definitive plan. Failure to do so may result in the rescission of the approval of such plan, unless the Board extends said period, for good cause shown, after the written request of the Applicant not less than 20 days before the expiration of said period.

21. Construct Streets and All Required Utilities. As a condition of approval of a subdivision, the applicant agrees to construct streets and complete all other work specified on the definitive plan or required under these Regulations, meet all relevant provisions of the Zoning Bylaw and other bylaws,

RECEIVED
2022 11 Jul, 10:01 am
TOWN CLERK
LEXINGTON MA

including installation of required utilities in such subdivision, and all work incidental to them, such as grading of lots to provide drainage, construction of retaining walls and other details or as specifically required by the Board.

22. Applicant/owner is responsible for maintaining the landscaping, streets, and utilities within the subdivision until formally accepted by the Town. The owner must provide a supplemental covenant agreeing to maintain the streets and utilities, including snow removal, and permitting the Town to maintain them if necessary at the expense of the owners. Any trees and landscaping that does not survive must be replaced in-kind within the first available growing season.

23. Perpetual Rights and Easements.

    a. As a condition of approval of a subdivision, the owner must grant to the Town a right and easement to construct, repair, replace, extend, operate, use and forever maintain all water mains, sewer mains, and all surface and subsurface stormwater drains in, through or under the streets and easements as indicated on the definitive plan.

    b. In consideration of being allowed to connect to the public street system and to enable the Town to protect public health and safety, the owner must grant the Town the perpetual right or easement to pass and repass over the streets and easements in the subdivision, and to use, operate, inspect, repair, renew, replace, and forever maintain the streets, street signs, and all appurtenances or components of them, in all of the subdivision and outside it if installed to serve the subdivision. To accomplish this, the owner must retain and reserve the necessary rights and easements in any conveyances or mortgaging of land or lots and in the recording of plans and easements.

    c. The owners must grant the Town the right to enforce on-street parking regulations within the subdivision and on any streets connecting the subdivision to the public street system. For projects that include minor streets, an instrument prohibiting parking and granting the Town enforcement rights will be required.

APPLICATION AND PLANS

The Planning Board evaluated the Application filed by or on behalf of the Applicants in the Planning Department on May 4, 2022 and through the close of the public hearing and the following material associated with this application.

1. Form B Application, dated May 3, 2022
2. Notice of Filing of a Definitive Subdivision Plan, from Frederick J. DeAngelis, submitted to the Planning Board, Board of Health, and Town Clerk, dated May 3, 2022

RECEIVED
2022 11 Jul, 10:02 am
TOWN CLERK
LEXINGTON MA

3. Subdivision Request Letter to the Planning Board from Frederick J. DeAngelis, dated May 3, 2022
4. Definite Subdivision Plans titled "Definitive Subdivision, 17 Hartwell Ave", dated April 29, 2022
    a. Sheet 1 or Cover Page, prepared by VHB, 101 Walnut Street, Watertown, Massachusetts, prepared for BP 17 Hartwell, LLC. signed and stamped by Civil Engineer, Nicholas J. Skoly, No.52677, dated April 29, 2022
    b. Sheet 2 or C1.01 titled "Legend and General Notes", prepared by VHB, 101 Walnut Street, Watertown, Massachusetts, prepared for BP 17 Hartwell, LLC. signed and stamped by Civil Engineer, Nicholas J. Skoly, No.52677, dated April 29, 2022
    c. Sheet 3 or C2.01 titled "Site Analysis Map", prepared by VHB, 101 Walnut Street, Watertown, Massachusetts, prepared for BP 17 Hartwell, LLC. signed and stamped by Civil Engineer, Nicholas J. Skoly, No.52677, dated April 29, 2022
    d. Sheet 4 or C3.01 titled "Abutters Plan", prepared by VHB, 101 Walnut Street, Watertown, Massachusetts, prepared for BP 17 Hartwell, LLC. signed and stamped by Civil Engineer, Nicholas J. Skoly, No.52677, dated April 29, 2022
    e. Sheet 5 or C4.01 titled "Property Rights", prepared by VHB, 101 Walnut Street, Watertown, Massachusetts, prepared for BP 17 Hartwell, LLC. signed and stamped by Civil Engineer, Nicholas J. Skoly, No.52677, dated April 29, 2022
    f. Sheet 6 or C5.01 titled "Key Plan", prepared by VHB, 101 Walnut Street, Watertown, Massachusetts, prepared for BP 17 Hartwell, LLC. signed and stamped by Civil Engineer, Nicholas J. Skoly, No.52677, dated April 29, 2022
    g. Sheet 7 or C5.02 titled "Plan Sheet", prepared by VHB, 101 Walnut Street, Watertown, Massachusetts, prepared for BP 17 Hartwell, LLC. signed and stamped by Civil Engineer, Nicholas J. Skoly, No.52677, dated April 29, 2022
    h. Sheet 8 or C6.01, titled "Street Layout and Profiles", prepared by VHB, 101 Walnut Street, Watertown, Massachusetts, prepared for BP 17 Hartwell, LLC. signed and stamped by Civil Engineer, Nicholas J. Skoly, No.52677, dated April 29, 2022.
    i. Sheet 9 or C7.01 titled "Landscape Plan", prepared by VHB, 101 Walnut Street, Watertown, Massachusetts, prepared for BP 17 Hartwell, LLC. signed and stamped by Landscape Architect, Michael D. Kluchman, No.1513, dated April 29, 2022
    j. Sheet 10 or C8.01 titled "Construction Details", prepared by VHB, 101 Walnut Street, Watertown, Massachusetts, prepared for BP 17 Hartwell, LLC., signed and stamped by Civil Engineer, Nicholas J. Skoly, No.52677, dated April 29, 2022
5. Drainage and Stormwater Management Plan, prepared by VHB, dated April 29, 2022
6. Draft Covenant, submitted May 4, 2022
7. Applicant's response letter to Preliminary Decision comments from Nicholas Skoly, dated April 29, 2022
8. Geotechnical Engineering Data Report from Amy Blomeke and Clayton Patterson, dated April 21, 2022
9. Memo from Molly Belanger, Planner to BP Hartwell LLC, re: Project review for 17 Hartwell Avenue, dated June 24, 2022.

RECEIVED
2022 11 Jul, 10:02 am
TOWN CLERK
LEXINGTON MA

10. Memo from Marissa Liggiero to Planning Director, subject: 17 Hartwell Avenue Comments, dated June 22, 2022.
11. Applicant response to comment letter, to Robert Peters, dated June 28, 2022.

RECORD OF VOTE

The following members of the Planning Board voted on June 29, 2022 to grant the certificate of action, subject to above stated terms and conditions: Robert Peters, Michael Schanbacher, Melanie Thompson, Robert Creech, and Charles Hornig.

The following members of the Planning Board voted to disapprove the certificate of action: none.

Robert D. Peters

_____July 11, 2022_____

Robert D. Peters, Chair Date

Definitive Subdivision Plans

Issued for	Definitive Subdivision
Date Issued	April 29, 2022
Latest Issue	April 29, 2022

17 Hartwell Ave

17 Hartwell Ave,
Lexington, MA

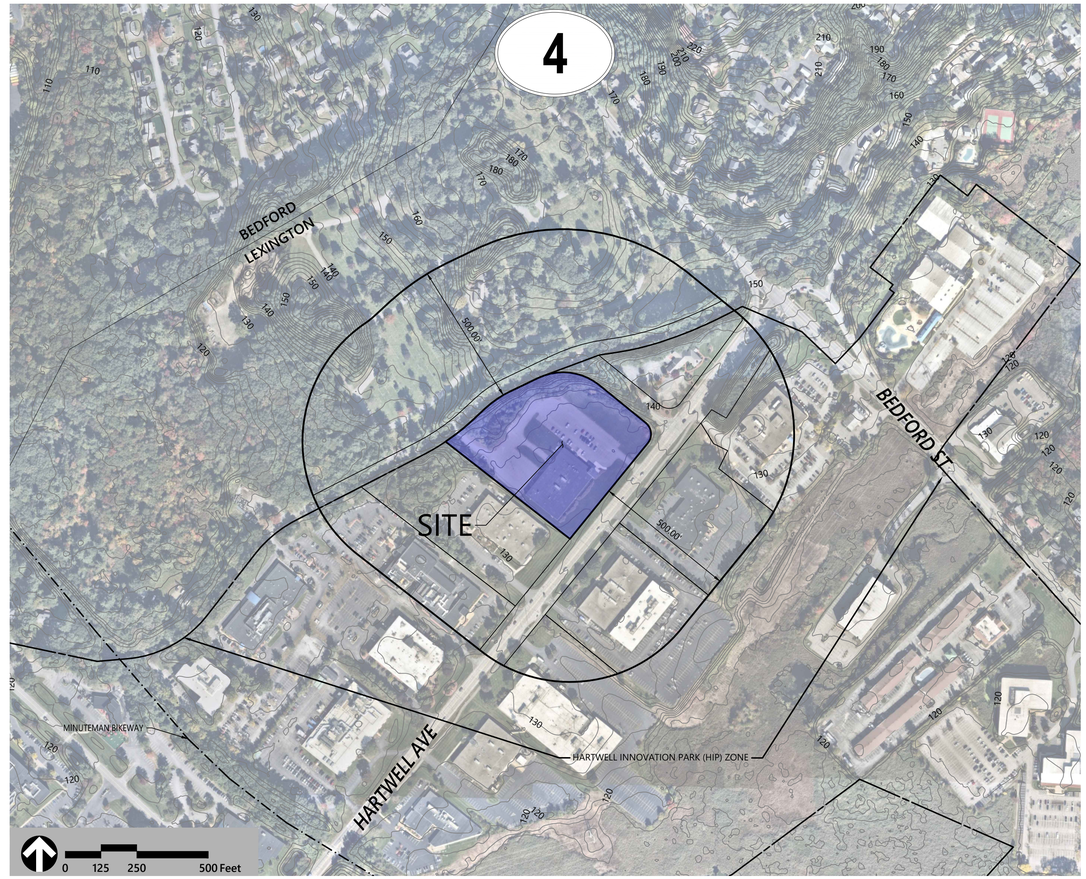

vhb.com

101 Walnut Street
PO Box 9151
Watertown, MA 02471
617.924.1770

Owner

BP 17 Hartwell LLC
C/O Boston Properties, Inc.
800 Boylston Street, Suite 1900
Boston, MA, 02199-8103

Applicant

BP 17 Hartwell LLC
800 Boylston Street, Suite 1900
Boston, MA, 02199-8103

Assessor's Map: 84
Lot: 80A

No.	Drawing Title	Latest Issue
C1.01	Legend and General Notes	April 29, 2022
C2.01	Site Analysis Map	April 29, 2022
C3.01	Abutters Plan	April 29, 2022
C4.01	Property Rights and Dimensional Standards	April 29, 2022
C5.01	Key Plan	April 29, 2022
C5.02	Plan Sheet	April 29, 2022
C6.01	Street Layout and Profiles	April 29, 2022
C7.01	Landscape Plan	April 29, 2022
C8.01	Construction Details	April 29, 2022

I DECLARE, TO THE BEST OF MY PROFESSIONAL KNOWLEDGE, INFORMATION, AND BELIEF, THAT THIS PLAN WAS PREPARED IN ACCORDANCE WITH THE RULES AND REGULATIONS OF THE REGISTERS OF DEEDS.

_____ DATE

I, _____, CLERK OF THE TOWN OF LEXINGTON, MASSACHUSETTS HEREBY CERTIFY THAT THE NOTICE OF APPROVAL OF THIS PLAN BY THE LEXINGTON PLANNING BOARD HAS BEEN RECEIVED AND RECORDED AT THIS OFFICE AND NO NOTICE OF APPEAL WAS RECEIVED DURING THE TWENTY DAYS NEXT AFTER SUCH RECEIPT AND RECORDING OF SAID NOTICE.

TOWN CLERK _____ DATE

APPROVED BY:
LEXINGTON PLANNING BOARD

RESERVED FOR REGISTRY USE ONLY

COMMONWEALTH OF MASSACHUSETTS
NICHOLAS J. SKOLY
CIVIL
No. 52677
REGISTERED PROFESSIONAL ENGINEER

VHB Project : 15463.00 17 Hartwell Ave
Issued for : Review April 29, 2022

\\VHB\GBL\PROJ\WAT-LDV\15463.00 LEXINGTON SUBDIVISIONS\CAD\LD\PLANSET\DEFINITIVE SUBDIVISION\17 HARTWELL\15463-00-COV 30
June 2022

Legend

Exist.	Prop.	
		PROPERTY LINE
		PROJECT LIMIT LINE
		RIGHT-OF-WAY/PROPERTY LINE
		EASEMENT
		BUILDING SETBACK
		PARKING SETBACK
10+00	10+00	BASELINE
		CONSTRUCTION LAYOUT
		ZONING LINE
		TOWN LINE
		LIMIT OF DISTURBANCE
		WETLAND LINE WITH FLAG
		FLOODPLAIN
BLSF		BORDERING LAND SUBJECT TO FLOODING
BZ		WETLAND BUFFER ZONE
NDZ		NO DISTURB ZONE
200'RA		200' RIVERFRONT AREA
		GRAVEL ROAD
EOP	EOP	EDGE OF PAVEMENT
BB	BB	BITUMINOUS BERM
BC	BC	BITUMINOUS CURB
CC	CC	CONCRETE CURB
	CG	CURB AND GUTTER
CC	ECC	EXTRUDED CONCRETE CURB
CC	MCC	MONOLITHIC CONCRETE CURB
CC	PCC	PRECAST CONC. CURB
SGE	SGE	SLOPED GRAN. EDGING
VGC	VGC	VERT. GRAN. CURB
		LIMIT OF CURB TYPE
		SAWCUT
		BUILDING
	EN	BUILDING ENTRANCE
	LD	LOADING DOCK
		BOLLARD
D	D	DUMPSTER PAD
		SIGN
		DOUBLE SIGN
		STEEL GUARDRAIL
		WOOD GUARDRAIL
		PATH
		TREE LINE
		WIRE FENCE
		FENCE
		STOCKADE FENCE
		STONE WALL
		RETAINING WALL
		STREAM / POND / WATER COURSE
		DETENTION BASIN
		HAY BALES
		SILT FENCE
		SILT SOCK / STRAW WATTLE
4	4	MINOR CONTOUR
20	20	MAJOR CONTOUR
10	10	PARKING COUNT
	C10	COMPACT PARKING STALLS
DYL	DYL	DOUBLE YELLOW LINE
SL	SL	STOP LINE
		CROSSWALK
		ACCESSIBLE CURB RAMP
		ACCESSIBLE PARKING
VAN	VAN	VAN-ACCESSIBLE PARKING

Exist.	Prop.	
		CONCRETE
		HEAVY DUTY PAVEMENT
		BUILDINGS
		RIPRAP
		CONSTRUCTION EXIT
27.35 TC×	27.35 TC×	TOP OF CURB ELEVATION
26.85 BC×	26.85 BC×	BOTTOM OF CURB ELEVATION
132.75 ×	132.75 ×	SPOT ELEVATION
45.0 TW× 38.5 BW	45.0 TW× 38.5 BW	TOP & BOTTOM OF WALL ELEVATION
		BORING LOCATION
		TEST PIT LOCATION
MW	MW	MONITORING WELL
UD	UD	UNDERDRAIN
12"D	12"D	DRAIN
6"RD	6"RD	ROOF DRAIN
12"S	12"S	SEWER
FM	FM	FORCE MAIN
OHW	OHW	OVERHEAD WIRE
6"W	6"W	WATER
4"FP	4"FP	FIRE PROTECTION
	2"DW	DOMESTIC WATER
3"G	G	GAS
E	E	ELECTRIC
STM	STM	STEAM
T	T	TELEPHONE
FA	FA	FIRE ALARM
CATV	CATV	CABLE TV
		CATCH BASIN CONCENTRIC
		CATCH BASIN ECCENTRIC
		DOUBLE CATCH BASIN CONCENTRIC
		DOUBLE CATCH BASIN ECCENTRIC
		GUTTER INLET
		DRAIN MANHOLE CONCENTRIC
		DRAIN MANHOLE ECCENTRIC
TD		TRENCH DRAIN
E	E	PLUG OR CAP
CO	CO	CLEANOUT
		FLARED END SECTION
		HEADWALL
S	S	SEWER MANHOLE CONCENTRIC
S	S	SEWER MANHOLE ECCENTRIC
CS	CS	CURB STOP & BOX
WV	WV	WATER VALVE & BOX
TSV	TSV	TAPPING SLEEVE, VALVE & BOX
		FIRE DEPARTMENT CONNECTION
HYD	HYD	FIRE HYDRANT
WM	WM	WATER METER
PIV	PIV	POST INDICATOR VALVE
W	W	WATER WELL
GC	GC	GAS GATE
GM	GM	GAS METER
E	EMH	ELECTRIC MANHOLE
EM	EM	ELECTRIC METER
		LIGHT POLE
T	TMH	TELEPHONE MANHOLE
T	T	TRANSFORMER PAD
		UTILITY POLE
		GUY POLE
		GUY WIRE & ANCHOR
HH	HH	HAND HOLE
PB	PB	PULL BOX
		MATCHLINE

Abbreviations

General

ABAN	ABANDON
ACR	ACCESSIBLE CURB RAMP
ADJ	ADJUST
APPROX	APPROXIMATE
BIT	BITUMINOUS
BS	BOTTOM OF SLOPE
BWLL	BROKEN WHITE LANE LINE
CONC	CONCRETE
DYCL	DOUBLE YELLOW CENTER LINE
EL	ELEVATION
ELEV	ELEVATION
EX	EXISTING
FDN	FOUNDATION
FFE	FIRST FLOOR ELEVATION
GRAN	GRANITE
GTD	GRADE TO DRAIN
LA	LANDSCAPE AREA
LOD	LIMIT OF DISTURBANCE
MAX	MAXIMUM
MIN	MINIMUM
NIC	NOT IN CONTRACT
NTS	NOT TO SCALE
PERF	PERFORATED
PROP	PROPOSED
REM	REMOVE
RET	RETAIN
R&D	REMOVE AND DISPOSE
R&R	REMOVE AND RESET
SWEL	SOLID WHITE EDGE LINE
SWLL	SOLID WHITE LANE LINE
TS	TOP OF SLOPE
TYP	TYPICAL

Utility

CB	CATCH BASIN
CMP	CORRUGATED METAL PIPE
CO	CLEANOUT
DCB	DOUBLE CATCH BASIN
DMH	DRAIN MANHOLE
CIP	CAST IRON PIPE
COND	CONDUIT
DIP	DUCTILE IRON PIPE
FES	FLARED END SECTION
FM	FORCE MAIN
F&G	FRAME AND GRATE
F&C	FRAME AND COVER
GI	GUTTER INLET
GT	GREASE TRAP
HDPE	HIGH DENSITY POLYETHYLENE PIPE
HH	HANDHOLE
HW	HEADWALL
HYD	HYDRANT
INV	INVERT ELEVATION
I=	INVERT ELEVATION
LP	LIGHT POLE
MES	METAL END SECTION
PIV	POST INDICATOR VALVE
PWW	PAVED WATER WAY
PVC	POLYVINYLCHLORIDE PIPE
RCP	REINFORCED CONCRETE PIPE
R=	RIM ELEVATION
RIM=	RIM ELEVATION
SMH	SEWER MANHOLE
TSV	TAPPING SLEEVE, VALVE AND BOX
UG	UNDERGROUND
UP	UTILITY POLE

Notes

General

1. CONTRACTOR SHALL NOTIFY "DIG-SAFE" (1-888-344-7233) AT LEAST 72 HOURS BEFORE EXCAVATING.
2. CONTRACTOR SHALL BE RESPONSIBLE FOR SITE SECURITY AND JOB SAFETY. CONSTRUCTION ACTIVITIES SHALL BE IN ACCORDANCE WITH OSHA STANDARDS AND LOCAL REQUIREMENTS.
3. ACCESSIBLE ROUTES, PARKING SPACES, RAMPS, SIDEWALKS AND WALKWAYS SHALL BE CONSTRUCTED IN CONFORMANCE WITH THE FEDERAL AMERICANS WITH DISABILITIES ACT AND WITH STATE AND LOCAL LAWS AND REGULATIONS (WHICHEVER ARE MORE STRINGENT).
4. AREAS DISTURBED DURING CONSTRUCTION AND NOT RESTORED WITH IMPERVIOUS SURFACES (BUILDINGS, PAVEMENTS, WALKS, ETC.) SHALL RECEIVE 6 INCHES LOAM AND SEED.
5. WITHIN THE LIMITS OF THE BUILDING FOOTPRINT, THE SITE CONTRACTOR SHALL PERFORM EARTHWORK OPERATIONS REQUIRED UP TO SUBGRADE ELEVATIONS.
6. WORK WITHIN THE LOCAL RIGHTS-OF-WAY SHALL CONFORM TO LOCAL MUNICIPAL STANDARDS. WORK WITHIN STATE RIGHTS-OF-WAY SHALL CONFORM TO THE LATEST EDITION OF THE STATE HIGHWAY DEPARTMENTS STANDARD SPECIFICATIONS FOR HIGHWAYS AND BRIDGES.
7. UPON AWARD OF CONTRACT, CONTRACTOR SHALL MAKE NECESSARY CONSTRUCTION NOTIFICATIONS AND APPLY FOR AND OBTAIN NECESSARY PERMITS, PAY FEES, AND POST BONDS ASSOCIATED WITH THE WORK INDICATED ON THE DRAWINGS, IN THE SPECIFICATIONS, AND IN THE CONTRACT DOCUMENTS. DO NOT CLOSE OR OBSTRUCT ROADWAYS, SIDEWALKS, AND FIRE HYDRANTS, WITHOUT APPROPRIATE PERMITS.
8. TRAFFIC SIGNAGE AND PAVEMENT MARKINGS SHALL CONFORM TO THE MANUAL ON UNIFORM TRAFFIC CONTROL DEVICES.
9. AREAS OUTSIDE THE LIMITS OF PROPOSED WORK DISTURBED BY THE CONTRACTOR'S OPERATIONS SHALL BE RESTORED BY THE CONTRACTOR TO THEIR ORIGINAL CONDITION AT THE CONTRACTOR'S EXPENSE.
10. IN THE EVENT THAT SUSPECTED CONTAMINATED SOIL, GROUNDWATER, AND OTHER MEDIA ARE ENCOUNTERED DURING EXCAVATION AND CONSTRUCTION ACTIVITIES BASED ON VISUAL, OLFACTORY, OR OTHER EVIDENCE, THE CONTRACTOR SHALL STOP WORK IN THE VICINITY OF THE SUSPECT MATERIAL TO AVOID FURTHER SPREADING OF THE MATERIAL, AND SHALL NOTIFY THE OWNER IMMEDIATELY SO THAT THE APPROPRIATE TESTING AND SUBSEQUENT ACTION CAN BE TAKEN.
11. CONTRACTOR SHALL PREVENT DUST, SEDIMENT, AND DEBRIS FROM EXITING THE SITE AND SHALL BE RESPONSIBLE FOR CLEANUP, REPAIRS AND CORRECTIVE ACTION IF SUCH OCCURS.
12. DAMAGE RESULTING FROM CONSTRUCTION LOADS SHALL BE REPAIRED BY THE CONTRACTOR AT NO ADDITIONAL COST TO OWNER.
13. CONTRACTOR SHALL CONTROL STORMWATER RUNOFF DURING CONSTRUCTION TO PREVENT ADVERSE IMPACTS TO OFF SITE AREAS, AND SHALL BE RESPONSIBLE TO REPAIR RESULTING DAMAGES, IF ANY, AT NO COST TO OWNER.

Utilities

1. THE LOCATIONS, SIZES, AND TYPES OF EXISTING UTILITIES ARE SHOWN AS AN APPROXIMATE REPRESENTATION ONLY. THE OWNER OR ITS REPRESENTATIVE(S) HAVE NOT INDEPENDENTLY VERIFIED THIS INFORMATION AS SHOWN ON THE PLANS. THE UTILITY INFORMATION SHOWN DOES NOT GUARANTEE THE ACTUAL EXISTENCE, SERVICEABILITY, OR OTHER DATA CONCERNING THE UTILITIES, NOR DOES IT GUARANTEE AGAINST THE POSSIBILITY THAT ADDITIONAL UTILITIES MAY BE PRESENT THAT ARE NOT SHOWN ON THE PLANS. PRIOR TO ORDERING MATERIALS AND BEGINNING CONSTRUCTION, THE CONTRACTOR SHALL VERIFY AND DETERMINE THE EXACT LOCATIONS, SIZES, AND ELEVATIONS OF THE POINTS OF CONNECTIONS TO EXISTING UTILITIES AND, SHALL CONFIRM THAT THERE ARE NO INTERFERENCES WITH EXISTING UTILITIES AND THE PROPOSED UTILITY ROUTES, INCLUDING ROUTES WITHIN THE PUBLIC RIGHTS OF WAY.
2. WHERE AN EXISTING UTILITY IS FOUND TO CONFLICT WITH THE PROPOSED WORK, OR EXISTING CONDITIONS DIFFER FROM THOSE SHOWN SUCH THAT THE WORK CANNOT BE COMPLETED AS INTENDED, THE LOCATION, ELEVATION, AND SIZE OF THE UTILITY SHALL BE ACCURATELY DETERMINED WITHOUT DELAY BY THE CONTRACTOR, AND THE INFORMATION FURNISHED IN WRITING TO THE OWNER'S REPRESENTATIVE FOR THE RESOLUTION OF THE CONFLICT AND CONTRACTOR'S FAILURE TO NOTIFY PRIOR TO PERFORMING ADDITIONAL WORK RELEASES OWNER FROM OBLIGATIONS FOR ADDITIONAL PAYMENTS WHICH OTHERWISE MAY BE WARRANTED TO RESOLVE THE CONFLICT.
3. SET CATCH BASIN RIMS, AND INVERTS OF SEWERS, DRAINS, AND DITCHES IN ACCORDANCE WITH ELEVATIONS ON THE GRADING AND UTILITY PLANS.
4. RIM ELEVATIONS FOR DRAIN AND SEWER MANHOLES, WATER VALVE COVERS, GAS GATES, ELECTRIC AND TELEPHONE PULL BOXES, AND MANHOLES, AND OTHER SUCH ITEMS, ARE APPROXIMATE AND SHALL BE SET/RESET AS FOLLOWS:
   - A. PAVEMENTS AND CONCRETE SURFACES: FLUSH
   - B. ALL SURFACES ALONG ACCESSIBLE ROUTES: FLUSH
   - C. LANDSCAPE, LOAM AND SEED, AND OTHER EARTH SURFACE AREAS: ONE INCH ABOVE SURROUNDING AREA AND TAPER EARTH TO THE RIM ELEVATION.
5. THE LOCATION, SIZE, DEPTH, AND SPECIFICATIONS FOR CONSTRUCTION OF PROPOSED PRIVATE UTILITY SERVICES SHALL BE INSTALLED ACCORDING TO THE REQUIREMENTS PROVIDED BY, AND APPROVED BY, THE RESPECTIVE UTILITY COMPANY (GAS, TELEPHONE, ELECTRIC, FIRE ALARM, ETC.). FINAL DESIGN LOADS AND LOCATIONS TO BE COORDINATED WITH OWNER AND ARCHITECT.
6. CONTRACTOR SHALL MAKE ARRANGEMENTS FOR AND SHALL BE RESPONSIBLE FOR PAYING FEES FOR POLE RELOCATIONS AND FOR THE ALTERATION AND ADJUSTMENT OF GAS, ELECTRIC, TELEPHONE, FIRE ALARM, AND ANY OTHER PRIVATE UTILITIES, WHETHER WORK IS PERFORMED BY CONTRACTOR OR BY THE UTILITIES COMPANY.
7. UTILITY PIPE MATERIALS SHALL BE AS FOLLOWS, UNLESS OTHERWISE NOTED ON THE PLAN:
   - A. WATER PIPES SHALL BE CEMENT LINED DUCTILE IRON PIPE (DIP)
   - B. SANITARY SEWER PIPES SHALL BE POLYVINYL CHLORIDE (PVC) SEWER PIPE
   - C. STORM DRAINAGE PIPES SHALL BE HIGH DENSITY POLYETHYLENE (HDPE)
   - D. PIPE INSTALLATION AND MATERIALS SHALL COMPLY WITH THE STATE PLUMBING CODE WHERE APPLICABLE. CONTRACTOR SHALL COORDINATE WITH LOCAL PLUMBING INSPECTOR PRIOR TO BEGINNING WORK.
8. CONTRACTOR SHALL COORDINATE WITH ELECTRICAL CONTRACTOR AND SHALL FURNISH EXCAVATION, INSTALLATION, AND BACKFILL OF ELECTRICAL FURNISHED SITEWORK RELATED ITEMS SUCH AS PULL BOXES, CONDUITS, DUCT BANKS, LIGHT POLE BASES, AND CONCRETE PADS. SITE CONTRACTOR SHALL FURNISH CONCRETE ENCASEMENT OF DUCT BANKS IF REQUIRED BY THE UTILITY COMPANY AND AS INDICATED ON THE DRAWINGS.
9. CONTRACTOR SHALL EXCAVATE AND BACKFILL TRENCHES FOR GAS IN ACCORDANCE WITH GAS COMPANY'S REQUIREMENTS.
10. ALL DRAINAGE AND SANITARY STRUCTURE INTERIOR DIAMETERS (4' MIN.) SHALL BE DETERMINED BY THE MANUFACTURER BASED ON THE PIPE CONFIGURATIONS SHOWN ON THESE PLANS AND LOCAL MUNICIPAL STANDARDS. FOR MANHOLES THAT ARE 20 FEET IN DEPTH AND GREATER, THE MINIMUM DIAMETER SHALL BE 5 FEET.

Layout and Materials

1. DIMENSIONS ARE FROM THE FACE OF CURB, FACE OF BUILDING, FACE OF WALL, AND CENTER LINE OF PAVEMENT MARKINGS, UNLESS OTHERWISE NOTED.
2. CURB RADII ARE 3 FEET UNLESS OTHERWISE NOTED.
3. CURBING SHALL BE VERTICAL GRANITE CURB WITHIN THE SITE UNLESS OTHERWISE INDICATED ON THE PLANS.
4. SEE ARCHITECTURAL DRAWINGS FOR EXACT BUILDING DIMENSIONS AND DETAILS CONTIGUOUS TO THE BUILDING, INCLUDING SIDEWALKS, RAMPS, BUILDING ENTRANCES, STAIRWAYS, UTILITY PENETRATIONS, CONCRETE DOOR PADS, COMPACTOR PAD, LOADING DOCKS, BOLLARDS, ETC.
5. PROPOSED BOUNDS AND ANY EXISTING PROPERTY LINE MONUMENTATION DISTURBED DURING CONSTRUCTION SHALL BE SET OR RESET BY A PROFESSIONAL LAND SURVEYOR.
6. PRIOR TO START OF CONSTRUCTION, CONTRACTOR SHALL VERIFY EXISTING PAVEMENT ELEVATIONS AT INTERFACE WITH PROPOSED PAVEMENTS, AND EXISTING GROUND ELEVATIONS ADJACENT TO DRAINAGE OUTLETS TO ASSURE PROPER TRANSITIONS BETWEEN EXISTING AND PROPOSED FACILITIES.

Demolition

1. CONTRACTOR SHALL REMOVE AND DISPOSE OF EXISTING MANMADE SURFACE FEATURES WITHIN THE LIMIT OF WORK INCLUDING BUILDINGS, STRUCTURES, PAVEMENTS, SLABS, CURBING, FENCES, UTILITY POLES, SIGNS, ETC. UNLESS INDICATED OTHERWISE ON THE DRAWINGS. REMOVE AND DISPOSE OF EXISTING UTILITIES, FOUNDATIONS AND UNSUITABLE MATERIAL BENEATH AND FOR A DISTANCE OF 10 FEET BEYOND THE PROPOSED BUILDING FOOTPRINT INCLUDING EXTERIOR COLUMNS.
2. EXISTING UTILITIES SHALL BE TERMINATED, UNLESS OTHERWISE NOTED, IN CONFORMANCE WITH LOCAL, STATE AND INDIVIDUAL UTILITY COMPANY STANDARD SPECIFICATIONS AND DETAILS. THE CONTRACTOR SHALL COORDINATE UTILITY SERVICE DISCONNECTS WITH THE UTILITY REPRESENTATIVES.
3. CONTRACTOR SHALL DISPOSE OF DEMOLITION DEBRIS IN ACCORDANCE WITH APPLICABLE FEDERAL, STATE AND LOCAL REGULATIONS, ORDINANCES AND STATUTES.
4 THE DEMOLITION LIMITS DEPICTED IN THE PLANS IS INTENDED TO AID THE CONTRACTOR DURING THE BIDDING AND CONSTRUCTION PROCESS AND IS NOT INTENDED TO DEPICT EACH AND EVERY ELEMENT OF DEMOLITION. THE CONTRACTOR IS RESPONSIBLE FOR IDENTIFYING THE DETAILED SCOPE OF DEMOLITION BEFORE SUBMITTING ITS BID/PROPOSAL TO PERFORM THE WORK AND SHALL MAKE NO CLAIMS AND SEEK NO ADDITIONAL COMPENSATION FOR CHANGED CONDITIONS OR UNFORESEEN OR LATENT SITE CONDITIONS RELATED TO ANY CONDITIONS DISCOVERED DURING EXECUTION OF THE WORK.
5. UNLESS OTHERWISE SPECIFICALLY PROVIDED ON THE PLANS OR IN THE SPECIFICATIONS, THE ENGINEER HAS NOT PREPARED DESIGNS FOR AND SHALL HAVE NO RESPONSIBILITY FOR THE PRESENCE, DISCOVERY, REMOVAL, ABATEMENT OR DISPOSAL OF HAZARDOUS MATERIALS, TOXIC WASTES OR POLLUTANTS AT THE PROJECT SITE. THE ENGINEER SHALL NOT BE RESPONSIBLE FOR ANY CLAIMS OF LOSS, DAMAGE, EXPENSE, DELAY, INJURY OR DEATH ARISING FROM THE PRESENCE OF HAZARDOUS MATERIAL AND CONTRACTOR SHALL INDEMNIFY AND HOLD HARMLESS THE ENGINEER FROM ANY CLAIMS MADE IN CONNECTION THEREWITH. MOREOVER, THE ENGINEER SHALL HAVE NO ADMINISTRATIVE OBLIGATIONS OF ANY TYPE WITH REGARD TO ANY CONTRACTOR AMENDMENT INVOLVING THE ISSUES OF PRESENCE, DISCOVERY, REMOVAL, ABATEMENT OR DISPOSAL OF ASBESTOS OR OTHER HAZARDOUS MATERIALS.

Erosion Control

1. PRIOR TO STARTING ANY OTHER WORK ON THE SITE, THE CONTRACTOR SHALL NOTIFY APPROPRIATE AGENCIES AND SHALL INSTALL EROSION CONTROL MEASURES AS SHOWN ON THE PLANS AND AS IDENTIFIED IN FEDERAL, STATE, AND LOCAL APPROVAL DOCUMENTS PERTAINING TO THIS PROJECT.
2. CONTRACTOR SHALL INSPECT AND MAINTAIN EROSION CONTROL MEASURES ON A WEEKLY BASIS (MINIMUM) OR AS REQUIRED PER THE STORMWATER POLLUTION PREVENTION PLAN (SWPPP). THE CONTRACTOR SHALL ADDRESS DEFICIENCIES AND MAINTENANCE ITEMS WITHIN TWENTY-FOUR HOURS OF INSPECTION. CONTRACTOR SHALL PROPERLY DISPOSE OF SEDIMENT SUCH THAT IT DOES NOT ENCUMBER OTHER DRAINAGE STRUCTURES AND PROTECTED AREAS.
3. CONTRACTOR SHALL BE FULLY RESPONSIBLE TO CONTROL CONSTRUCTION SUCH THAT SEDIMENTATION SHALL NOT AFFECT REGULATORY PROTECTED AREAS, WHETHER SUCH SEDIMENTATION IS CAUSED BY WATER, WIND, OR DIRECT DEPOSIT.
4. CONTRACTOR SHALL PERFORM CONSTRUCTION SEQUENCING SUCH THAT EARTH MATERIALS ARE EXPOSED FOR A MINIMUM OF TIME BEFORE THEY ARE COVERED, SEEDED, OR OTHERWISE STABILIZED TO PREVENT EROSION.
5. UPON COMPLETION OF CONSTRUCTION AND ESTABLISHMENT OF PERMANENT GROUND COVER, CONTRACTOR SHALL REMOVE AND DISPOSE OF EROSION CONTROL MEASURES AND CLEAN SEDIMENT AND DEBRIS FROM ENTIRE DRAINAGE AND SEWER SYSTEMS.

Existing Conditions Information

BASE PLAN: THE PROPERTY LINES SHOWN WERE DETERMINED FROM A PLAN SET PREPARED BY MERIDIAN ASSOCIATES ON MARCH 4, 2016 FOR BP HARTWELL LLC AND FROM PLANS OF RECORD. THE TOPOGRAPHY AND PHYSICAL FEATURES ARE BASED ON THE SAME PLAN SET PREPARED BY MERIDAN ASSOCIATES ON MARCH 4, 2016 FOR HARTWELL LLC.

2. TOPOGRAPHY: ELEVATIONS ARE BASED ON THE TOWN OF LEXINGTON SEWER DATUM; NATIONAL GEODETIC VERTICAL DATUM OF 1929 (NGVD29).

Document Use

1. THESE PLANS AND CORRESPONDING CADD DOCUMENTS ARE INSTRUMENTS OF PROFESSIONAL SERVICE. AND SHALL NOT BE USED, IN WHOLE OR IN PART, FOR ANY PURPOSE OTHER THAN FOR WHICH IT WAS CREATED WITHOUT THE EXPRESSED, WRITTEN CONSENT OF VHB. ANY UNAUTHORIZED USE, REUSE, MODIFICATION OR ALTERATION, INCLUDING AUTOMATED CONVERSION OF THIS DOCUMENT SHALL BE AT THE USER'S SOLE RISK WITHOUT LIABILITY OR LEGAL EXPOSURE TO VHB.
2. CONTRACTOR SHALL NOT RELY SOLELY ON ELECTRONIC VERSIONS OF PLANS, SPECIFICATIONS, AND DATA FILES THAT ARE OBTAINED FROM THE DESIGNERS, BUT SHALL VERIFY LOCATION OF PROJECT FEATURES IN ACCORDANCE WITH THE PAPER COPIES OF THE PLANS AND SPECIFICATIONS THAT ARE SUPPLIED AS PART OF THE CONTRACT DOCUMENTS.
3. SYMBOLS AND LEGENDS OF PROJECT FEATURES ARE GRAPHIC REPRESENTATIONS AND ARE NOT NECESSARILY SCALED TO THEIR ACTUAL DIMENSIONS OR LOCATIONS ON THE DRAWINGS. THE CONTRACTOR SHALL REFER TO THE DETAIL SHEET DIMENSIONS, MANUFACTURERS' LITERATURE, SHOP DRAWINGS AND FIELD MEASUREMENTS OF SUPPLIED PRODUCTS FOR LAYOUT OF THE PROJECT FEATURES.

vhb.com

101 Walnut Street
PO Box 9151
Watertown, MA 02471
617.924.1770

Owner

BP 17 Hartwell LLC
C/O Boston Properties, Inc.
800 Boylston Street, Suite 1900
Boston, MA, 02199-8103

Applicant

BP 17 Hartwell LLC
800 Boylston Street, Suite 1900
Boston, MA, 02199-8103

17 Hartwell Avenue

17 Hartwell Ave
Lexington, MA

No.	Revision	Date	Appvd.

Designed by | Checked by

Issued for | Date

April 29, 2022

Not Approved for Construction

Drawing Title

Legend and General Notes

Drawing Number

C1.01

Sheet 2 of 10

Project Number 15463.00

COMMONWEALTH OF MASSACHUSETTS
NICHOLAS J. SKOLY
CIVIL
No. 52677
REGISTERED PROFESSIONAL ENGINEER

I DECLARE, TO THE BEST OF MY PROFESSIONAL KNOWLEDGE, INFORMATION, AND BELIEF, THAT THIS PLAN WAS PREPARED IN ACCORDANCE WITH THE RULES AND REGULATIONS OF THE REGISTERS OF DEEDS.

_____ DATE

I, _____, CLERK OF THE TOWN OF LEXINGTON, MASSACHUSETTS HEREBY CERTIFY THAT THE NOTICE OF APPROVAL OF THIS PLAN BY THE LEXINGTON PLANNING BOARD HAS BEEN RECEIVED AND RECORDED AT THIS OFFICE AND NO NOTICE OF APPEAL WAS RECEIVED DURING THE TWENTY DAYS NEXT AFTER SUCH RECEIPT AND RECORDING OF SAID NOTICE.

TOWN CLERK _____ DATE

APPROVED BY:
LEXINGTON PLANNING BOARD

RESERVED FOR REGISTRY USE ONLY

Saved Monday, December 27, 2021 4:43:45 PM SMORTON Plotted Thursday, June 30, 2022 4:05:47 PM Sarah Morton

Notes

General

1. THE PROPERTY LINES SHOWN ON THIS PLAN ARE BASED UPON AN ACTUAL FIELD SURVEY CONDUCTED BY VHB, INC. BETWEEN NOVEMBER, 2021 AND FEBRUARY, 2022 AND FROM DEEDS AND PLANS OF RECORD.
2. THE EXISTING CONDITIONS SHOWN ON THIS PLAN ARE BASED UPON AN ACTUAL ON-THE-GROUND INSTRUMENT SURVEY PERFORMED BY VHB, INC. BETWEEN NOVEMBER, 2021 AND FEBRUARY, 2022.
3. THE LOCATIONS OF EXISTING UNDERGROUND UTILITIES SHOWN ON THIS PLAN ARE BASED ON INFORMATION OF RECORD. THEY ARE NOT WARRANTED TO BE EXACTLY LOCATED NOR IS IT WARRANTED THAT ALL UNDERGROUND UTILITIES OR OTHER STRUCTURES ARE SHOWN ON THIS PLAN.
4. HORIZONTAL DATUM IS BASED ON MASS. GRID SYSTEM, NAD 1983. ELEVATIONS SHOWN ON THIS PLAN REFER TO NAVD OF 1988.
5. THE LOT LIES ENTIRELY WITHIN ZONE X (UNSHADED) (AREAS TO BE OUTSIDE THE 0.2% ANNUAL CHANCE FLOODPLAIN) AS SHOWN ON THE FLOOD INSURANCE RATE MAP FOR MIDDLESEX COUNTY, MASSACHUSETTS, MAP NUMBER 25017C0382F, EFFECTIVE DATE JULY 6, 2016.
6. THE SITE LIES WITHIN THE HARTWELL INNOVATION PARK DISTRICT (C-HIP) AND HARTWELL AVENUE AREA TRANSPORTATION MANAGEMENT OVERLAY DISTRICT AS SHOWN ON THE "2019 ZONING MAP OF THE TOWN OF LEXINGTON", DATED AUGUST 30, 2019 AND "ARTICLE 45 - AMEND ZONING BYLAW & ZONING MAP – HARTWELL INNOVATION PARK", DATED MARCH 16, 2021. DIMENSIONAL REQUIREMENTS FOR A (C-HIP) ARE:

	CM
MINIMUM LOT AREA	20,000 SF
MINIMUM FRONTAGE	125 FEET
MINIMUM FRONT YARD SETBACK	10 FEET
MINIMUM SIDE YARD SETBACK	15 FEET
MINIMUM REAR YARD SETBACK	15 FEET
MAXIMUM BUILDING HEIGHT	115 FEET

7. THE SURVEY WAS PREPARED WITHOUT THE BENEFIT OF A CURRENT TITLE REPORT AND MAY BE SUBJECT TO ADDITIONAL INFORMATION DISCLOSED IN SUCH.
8. WITHIN THE LIMITS OF WORK THERE ARE NO TREES.
9. GEOTECH INFORMATION
10. BORING LB-01 AND TEST PIT TP-01 WERE PERFORMED BY GEOLOGIC EARTH EXPLORATION, INC. ON APRIL 14, 2022 UNDER THE FULL-TIME OBSERVATION OF A LANGAN ENGINEERING AND ENVIRONMENTAL SERVICES, INC. FIELD ENGINEER. ALL EXPLORATION LOCATIONS ARE APPROXIMATE AND BASED ON A "EXPLORATION LOCATION PLAN" BY LANGAN DATED APRIL, 2022. INFORMATION FROM THE BORING AND TEST PIT IS PROVIDED IN THE GEOTECHNICAL ENGINEERING DATA REPORT BY LANGAN DATED APRIL 21, 2022.

Legend

- 15-25% SLOPES
- 25-40% SLOPES
- >40% SLOPES

0 20 40 80 Feet

vhb.com
101 Walnut Street
PO Box 9151
Watertown, MA 02471
617.924.1770

Owner
BP 17 Hartwell LLC
C/O Boston Properties, Inc.
800 Boylston Street, Suite 1900
Boston, MA, 02199-8103

Applicant
BP 17 Hartwell LLC
800 Boylston Street, Suite 1900
Boston, MA, 02199-8103

17 Hartwell Avenue

17 Hartwell Ave
Lexington, MA

No.	Revision	Date	Appvd.

Designed by | Checked by
Issued for | Date
April 29, 2022

Not Approved for Construction

Drawing Title
Site Analysis Map

Drawing Number
C2.01

Sheet 3 of 10

Project Number
15463.00

COMMONWEALTH OF MASSACHUSETTS
NICHOLAS J. SKOLY
CIVIL
No. 52677
REGISTERED PROFESSIONAL ENGINEER

I DECLARE, TO THE BEST OF MY PROFESSIONAL KNOWLEDGE, INFORMATION, AND BELIEF, THAT THIS PLAN WAS PREPARED IN ACCORDANCE WITH THE RULES AND REGULATIONS OF THE REGISTERS OF DEEDS.

DATE

I, _____, CLERK OF THE TOWN OF LEXINGTON, MASSACHUSETTS HEREBY CERTIFY THAT THE NOTICE OF APPROVAL OF THIS PLAN BY THE LEXINGTON PLANNING BOARD HAS BEEN RECEIVED AND RECORDED AT THIS OFFICE AND NO NOTICE OF APPEAL WAS RECEIVED DURING THE TWENTY DAYS NEXT AFTER SUCH RECEIPT AND RECORDING OF SAID NOTICE.

TOWN CLERK DATE

APPROVED BY:
LEXINGTON PLANNING BOARD

RESERVED FOR REGISTRY USE ONLY

Saved Thursday, June 30, 2022 9:17:42 AM SMORTON Plotted Thursday, June 30, 2022 4:06:36 PM Sarah Morton

vhb.com

101 Walnut Street
PO Box 9151
Watertown, MA 02471
617.924.1770

84-70A
482 BEDFORD ST
TRUST FOR THE BENEFIT OF THE BETH
ISRAEL HOSPITAL ASSOCIATION AND THE
CHILDREN'S HOSPITAL CORPORATION
482 BEDFORD ST
LEXINGTON, MA 02420

84-70C
12-18 HARTWELL AVE
JOSCO REALTY TRUST
24 HARTWELL AVE
LEXINGTON, MA 02421

84-70E
24 HARTWELL AVE
COLANGELO STEVEN TRUSTEE
24 HARTWELL AVE
LEXINGTON, MA 02421

84-80B
25 HARTWELL AVE
DUFFY HARTWELL LLC
DUFFY BROS MANAGEMENT CO INC
465 WAVERLY OAKS RD STE 500
WALTHAM, MA 02452

84-81
7 HARTWELL AVE
7 HARTWELL LLC
200 WELLS AVE
NEWTON, MA 02459

84-82
520 BEDFORD ST
TOWN OF LEXINGTON
1625 MASS AVE
LEXINGTON, MA 02420

84-83B
32 HARTWELL AVE
ZUCKERMAN MORTIMER B
TRS MBZ-LEX TRUST
800 BOYLSTON ST STE 1900
BOSTON, MA 02199

Owner
BP 17 Hartwell LLC
C/O Boston Properties, Inc.
800 Boylston Street, Suite 1900
Boston, MA, 02199-8103

Applicant
BP 17 Hartwell LLC
800 Boylston Street, Suite 1900
Boston, MA, 02199-8103

0 75 150 300 Feet

17 Hartwell Avenue

17 Hartwell Ave
Lexington, MA

No.	Revision	Date	Appvd.

Designed by | Checked by
Issued for | Date
April 29, 2022

Not Approved for Construction

Drawing Title
Abutters Plan

Drawing Number
C3.01

Sheet 4 of 10

Project Number
15463.00

COMMONWEALTH OF MASSACHUSETTS
NICHOLAS J. SKOLY
CIVIL
No. 52677
REGISTERED PROFESSIONAL ENGINEER

I DECLARE, TO THE BEST OF MY PROFESSIONAL KNOWLEDGE, INFORMATION, AND BELIEF, THAT THIS PLAN WAS PREPARED IN ACCORDANCE WITH THE RULES AND REGULATIONS OF THE REGISTERS OF DEEDS.

_____ DATE

I, _____, CLERK OF THE TOWN OF LEXINGTON, MASSACHUSETTS HEREBY CERTIFY THAT THE NOTICE OF APPROVAL OF THIS PLAN BY THE LEXINGTON PLANNING BOARD HAS BEEN RECEIVED AND RECORDED AT THIS OFFICE AND NO NOTICE OF APPEAL WAS RECEIVED DURING THE TWENTY DAYS NEXT AFTER SUCH RECEIPT AND RECORDING OF SAID NOTICE.

TOWN CLERK _____ DATE

APPROVED BY:
LEXINGTON PLANNING BOARD

RESERVED FOR REGISTRY USE ONLY

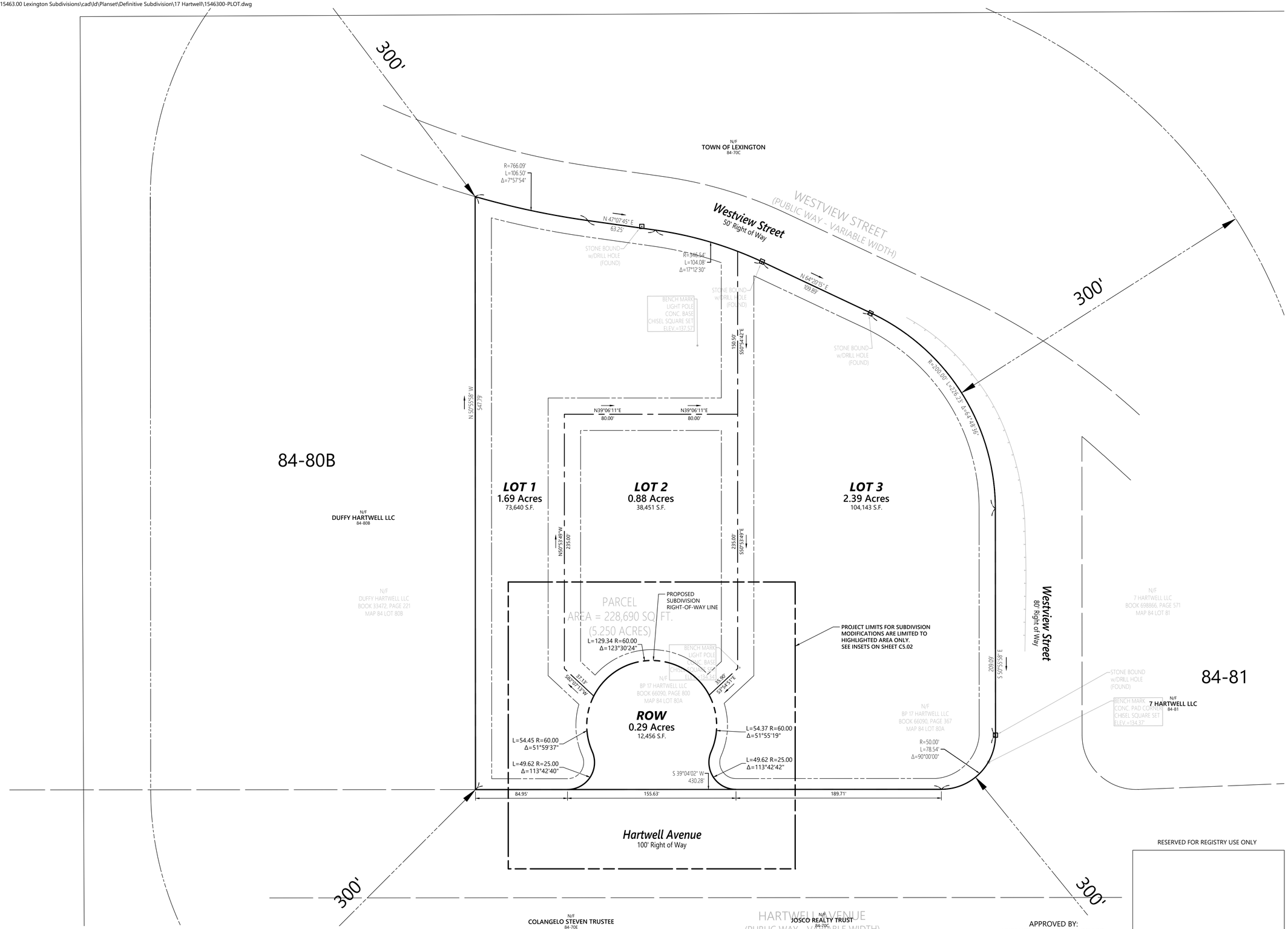

I DECLARE, TO THE BEST OF MY PROFESSIONAL KNOWLEDGE, INFORMATION, AND BELIEF, THAT THIS PLAN WAS PREPARED IN ACCORDANCE WITH THE RULES AND REGULATIONS OF THE REGISTERS OF DEEDS.

_____ DATE

I, _____, CLERK OF THE TOWN OF LEXINGTON, MASSACHUSETTS HEREBY CERTIFY THAT THE NOTICE OF APPROVAL OF THIS PLAN BY THE LEXINGTON PLANNING BOARD HAS BEEN RECEIVED AND RECORDED AT THIS OFFICE AND NO NOTICE OF APPEAL WAS RECEIVED DURING THE TWENTY DAYS NEXT AFTER SUCH RECEIPT AND RECORDING OF SAID NOTICE.

TOWN CLERK _____ DATE

APPROVED BY:
LEXINGTON PLANNING BOARD

RESERVED FOR REGISTRY USE ONLY

vhb.com

101 Walnut Street
PO Box 9151
Watertown, MA 02471
617.924.1770

Owner
BP 17 Hartwell LLC
C/O Boston Properties, Inc.
800 Boylston Street, Suite 1900
Boston, MA, 02199-8103

Applicant
BP 17 Hartwell LLC
800 Boylston Street, Suite 1900
Boston, MA, 02199-8103

0 20 40 80 Feet

17 Hartwell Avenue

17 Hartwell Ave
Lexington, MA

No.	Revision	Date	Appvd.

Designed by | Checked by

Issued for | Date
April 29, 2022

Not Approved for Construction

Drawing Title
Property Rights and Dimensional Standards

COMMONWEALTH OF MASSACHUSETTS
NICHOLAS J. SKOLY
CIVIL
No. 52877
REGISTERED PROFESSIONAL ENGINEER

Drawing Number
C4.01

Sheet 5 of 10

Project Number
15463.00

Notes

General

1. HORIZONTAL DATUM IS BASED ON MASS. GRID SYSTEM, NAD 1983. ELEVATIONS SHOWN ON THIS PLAN REFER TO NAVD OF 1929.

Zoning Summary Chart

Zoning District(S):	C-HIP - Hartwell Innovation Park District (formerly CM - Manufacturing District)
Overlay District(S):	Transportation Management

Zoning Regulation Requirements	Existing	Required*	Provided Lot 1	Provided Lot 2	Provided Lot 3	Proposed Subdivision Road
MINIMUM LOT AREA	228,690 SF (5.25 Acres)	20,000 SF (0.46 Acres)	73,640 SF (1.69 Acres)	38,451 SF (0.88 Acres)	104,143 SF (2.39 Acres)	12,456 SF (0.29 Acres)
FRONTAGE [1]	469.5 Feet	125.0 Feet	187.6 Feet	131.3 Feet	332.4 Feet	N/A
FRONT YARD SETBACK [2 3]	75 Feet	10 Feet	N/A [5]	N/A [5]	N/A [5]	N/A
SIDE YARD SETBACK [3]	25 Feet	15 Feet	N/A [5]	N/A [5]	N/A [5]	N/A
REAR YARD SETBACK [3]	282 Feet	15 Feet	N/A [5]	N/A [5]	N/A [5]	N/A
MAXIMUM FLOOR AREA RATIO	0.13	NR	N/A [5]	N/A [5]	N/A [5]	NR
MAXIMUM BUILDING HEIGHT [3 4]	14 Feet	115 Feet	N/A [5]	N/A [5]	N/A [5]	N/A
MAXIMUM BUILDING COVERAGE	13.4 %	NR	N/A [5]	N/A [5]	N/A [5]	NR
DEVELOPABLE SITE AREA	228,690 SF (5.25 Acres)	NR	73,640 SF (1.69 Acres)	38,451 SF (0.88 Acres)	104,143 SF (2.39 Acres)	NR
IMPERVIOUS SURFACE	103,900 SF (2.39 Acres)	NR	N/A [5]	N/A [5]	N/A [5]	NR
IMPERVIOUS SURFACE RATIO	0.45	NR	N/A [5]	N/A [5]	N/A [5]	NR

* Zoning regulation requirements as specified in Town of Lexington Zoning Code, Section 4.0 Dimensional Controls and Section 7.5 C-HIP District.

[1] As specified in Town of Lexington Zoning Code, Section 4.1.1, Table 2: Schedule of Dimensional Controls, Note J: "Required lot frontage may be decreased to a minimum of fifty (50) feet when a property is accessed by a drive alley, shared curb cut, or shared driveway, provided it has been designed to accommodate the Lexington Fire Department's largest fire apparatus."

[2] As specified in Town of Lexington Zoning Code, Section 4.1.1, Table 2: Schedule of Dimensional Controls, Note B: "...For uses located in the CM and CRO Districts, the minimum front yard facing all streets shall be the same as that for the frontage street."

[3] As specified in Town of Lexington Zoning Code, Section 4.1.1, Table 2: Schedule of Dimensional Controls, Note F: "This limit may be waived by special permit."

[4] As specified in Town of Lexington Zoning Code, Section 5.4.1, "a. The difference between the upper elevation of each segment of a building or structure and the centerline grade of any street or bikeway shall be no greater than the distance from that segment to the centerline of a street multiplied by 1.0 or to the centerline of the Minuteman Bikeway multiplied by 2.0. .c. Buildings that are not designed to meet the requirements to demonstrate certifiability at the Silver level using the LEED v4 for Building Design and Construction: Core and Shell checklist, as outlined by the U. S. Green Building Council, are limited to sixty-five (65) feet in height. d. Buildings utilizing on-site combustion for HVAC system operation are limited to six (6) stories.

[5] Existing building and parking to be removed.

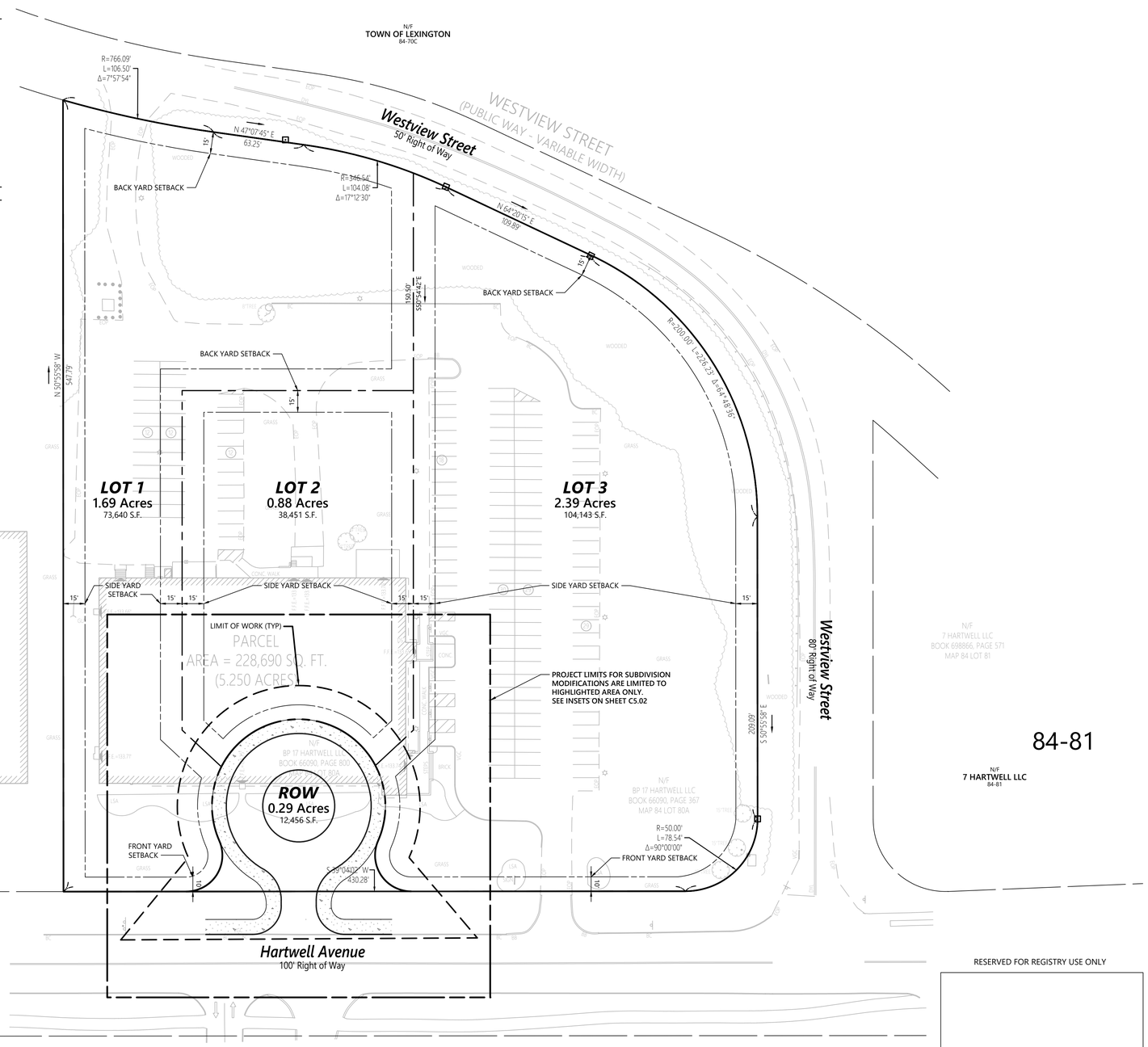

I DECLARE, TO THE BEST OF MY PROFESSIONAL KNOWLEDGE, INFORMATION, AND BELIEF, THAT THIS PLAN WAS PREPARED IN ACCORDANCE WITH THE RULES AND REGULATIONS OF THE REGISTERS OF DEEDS.

DATE

I, _____, CLERK OF THE TOWN OF LEXINGTON, MASSACHUSETTS HEREBY CERTIFY THAT THE NOTICE OF APPROVAL OF THIS PLAN BY THE LEXINGTON PLANNING BOARD HAS BEEN RECEIVED AND RECORDED AT THIS OFFICE AND NO NOTICE OF APPEAL WAS RECEIVED DURING THE TWENTY DAYS NEXT AFTER SUCH RECEIPT AND RECORDING OF SAID NOTICE.

TOWN CLERK

DATE

APPROVED BY:
LEXINGTON PLANNING BOARD

RESERVED FOR REGISTRY USE ONLY

vhb.com

101 Walnut Street
PO Box 9151
Watertown, MA 02471
617.924.1770

Owner

BP 17 Hartwell LLC
C/O Boston Properties, Inc.
800 Boylston Street, Suite 1900
Boston, MA, 02199-8103

Applicant

BP 17 Hartwell LLC
800 Boylston Street, Suite 1900
Boston, MA, 02199-8103

0 20 40 80 Feet

17 Hartwell Avenue

17 Hartwell Ave
Lexington, MA

No.	Revision	Date	Appvd.

Designed by | Checked by
Issued for | Date
April 29, 2022

Not Approved for Construction

Drawing Title
Key Plan

COMMONWEALTH OF MASSACHUSETTS
NICHOLAS J. SKOLY
CIVIL
No. 52677
REGISTERED PROFESSIONAL ENGINEER

Drawing Number
C5.01

Sheet 6 of 10

Project Number
15463.00

Notes

General

1. HORIZONTAL DATUM IS BASED ON MASS. GRID SYSTEM, NAD 1983. ELEVATIONS SHOWN ON THIS PLAN REFER TO NAVD OF 1988.

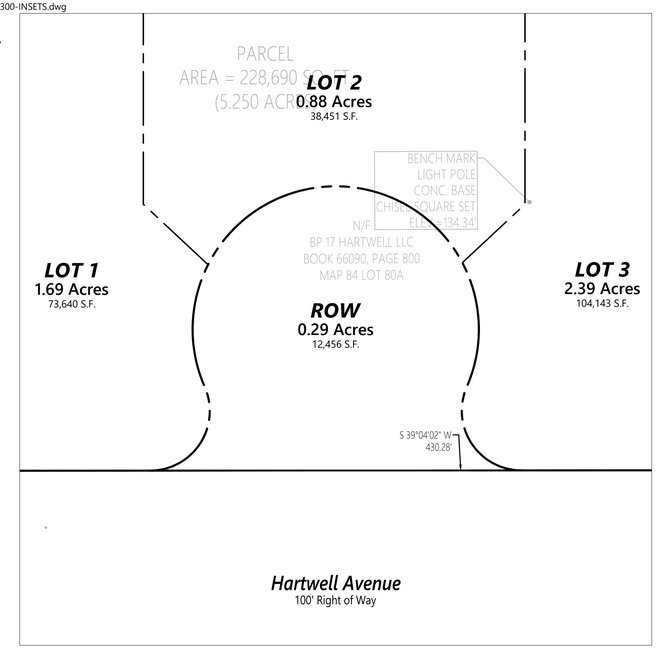

LOTTING PLAN

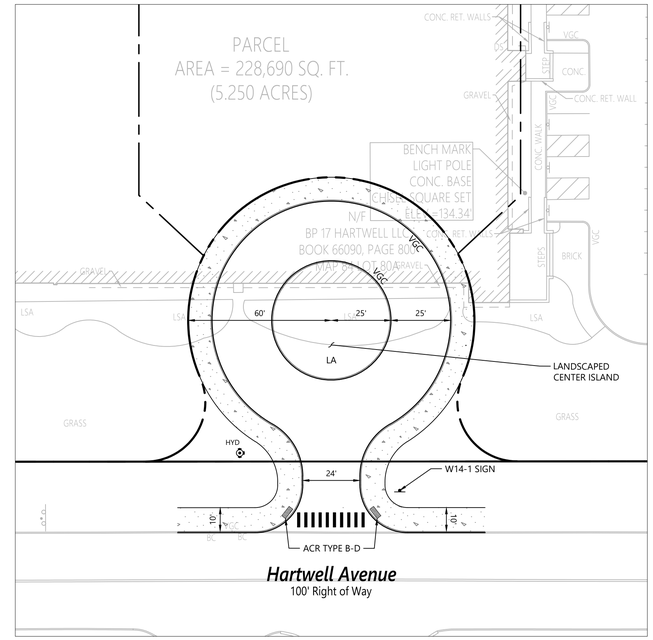

LAYOUT AND MATERIALS

vhb.com

101 Walnut Street
PO Box 9151
Watertown, MA 02471
617.924.1770

Owner

BP 17 Hartwell LLC
C/O Boston Properties, Inc.
800 Boylston Street, Suite 1900
Boston, MA, 02199-8103

Applicant

BP 17 Hartwell LLC
800 Boylston Street, Suite 1900
Boston, MA, 02199-8103

Sign Summary

M.U.T.C.D. Number	Specification Width	Specification Height	Desc.
W14-1	30"	30"	DEAD END

Cut/Fill Calculations

CUT	± 280 CY
FILL	± 250 CY
NET (FILL)	± 30 CY

Notes

General

1. REMOVAL OF EXISTING UNDERGROUND UTILITIES OR OBSTRUCTIONS IS NOT INCLUDED IN THE CALCULATIONS, NOR IS THE INSTALLATION OF PROPOSED UTILITIES.
2. NO ASSUMPTIONS ARE MADE REGARDING OVER-EXCAVATION THAT MAY BE REQUIRED DUE TO UNSUITABLE MATERIAL.
3. NO SHRINK/SWELL FACTORS ARE APPLIED.

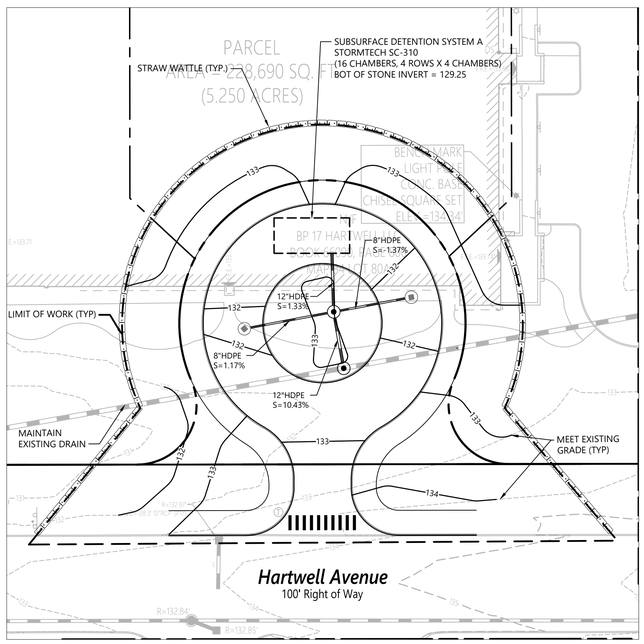

GRADING AND DRAINAGE

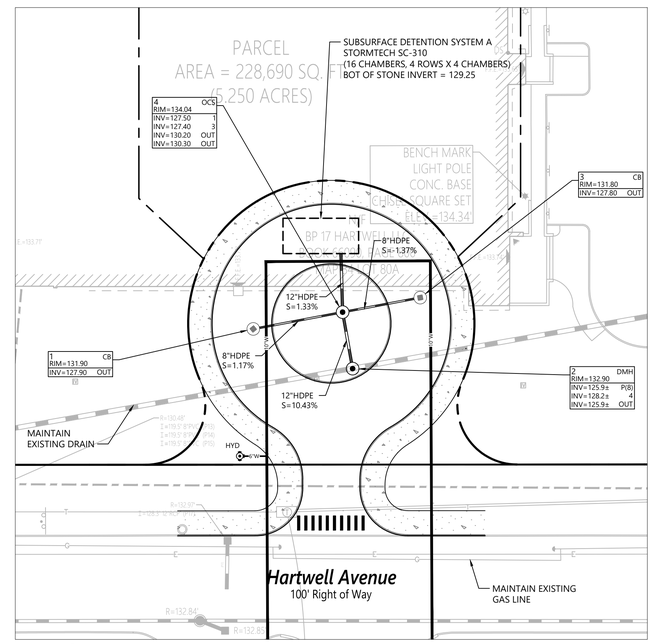

UTILITIES

0 15 30 60 Feet

17 Hartwell Avenue

17 Hartwell Ave
Lexington, MA

No.	Revision	Date	Appvd.

Designed by | Checked by

Issued for | Date

April 29, 2022

Not Approved for Construction

Drawing Title

Plan Sheet

Drawing Number

C5.02

Sheet 7 of 10

Project Number

15463.00

I DECLARE, TO THE BEST OF MY PROFESSIONAL KNOWLEDGE, INFORMATION, AND BELIEF, THAT THIS PLAN WAS PREPARED IN ACCORDANCE WITH THE RULES AND REGULATIONS OF THE REGISTERS OF DEEDS.

DATE

I, _____, CLERK OF THE TOWN OF LEXINGTON, MASSACHUSETTS HEREBY CERTIFY THAT THE NOTICE OF APPROVAL OF THIS PLAN BY THE LEXINGTON PLANNING BOARD HAS BEEN RECEIVED AND RECORDED AT THIS OFFICE AND NO NOTICE OF APPEAL WAS RECEIVED DURING THE TWENTY DAYS NEXT AFTER SUCH RECEIPT AND RECORDING OF SAID NOTICE.

TOWN CLERK | DATE

APPROVED BY:
LEXINGTON PLANNING BOARD

RESERVED FOR REGISTRY USE ONLY

Saved Thursday, June 30, 2022 3:49:49 PM SMORTON Plotted Thursday, June 30, 2022 4:09:02 PM Sarah Morton

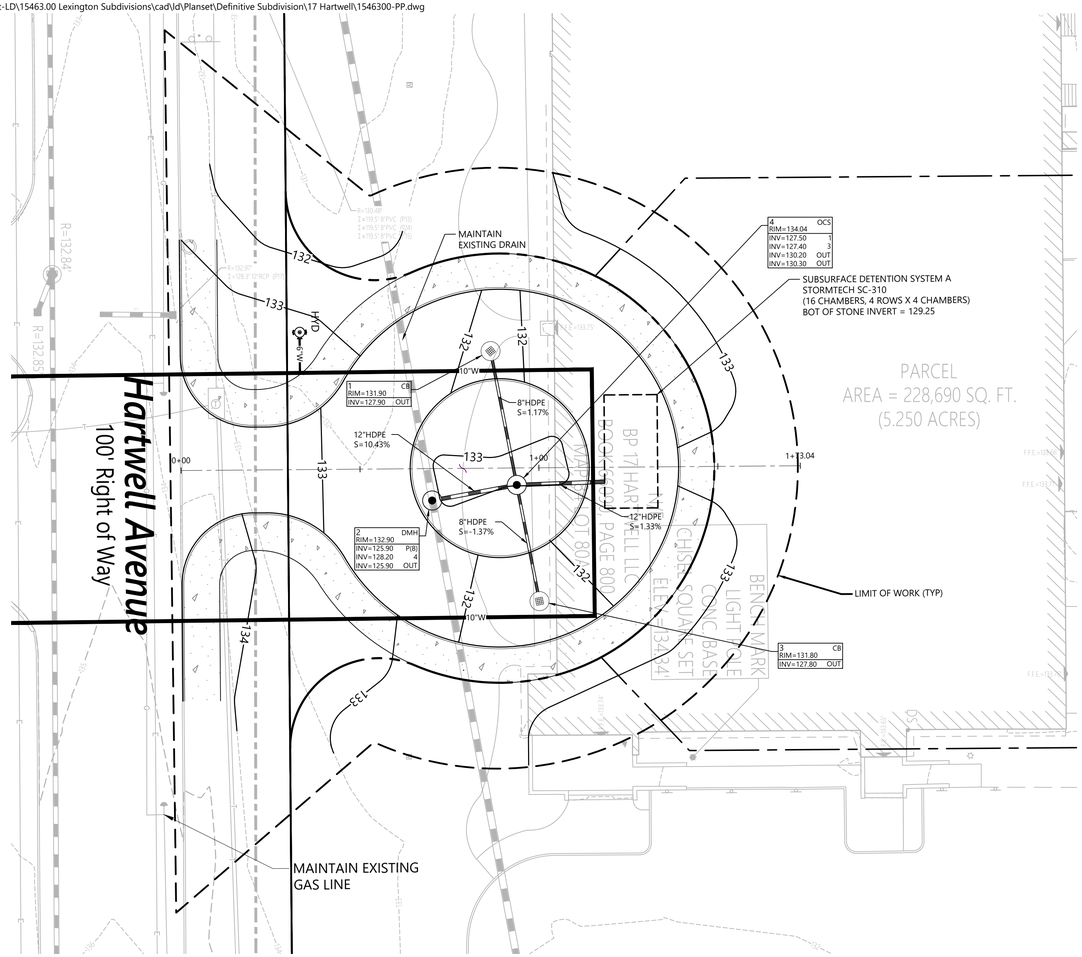

Notes

General

1. INFORMATION ON MATERIAL, CLASS/STRENGTH, SIZE, AND GRADE OF SEWERS AND DRAINS PROVIDED ON C1.01 AND C5.02. INFORMATION ON DRAINAGE STRUCTURES PROVIDED ON C8.01.
2. NO VERTICAL CURVES OCCUR ALONG ROAD A.

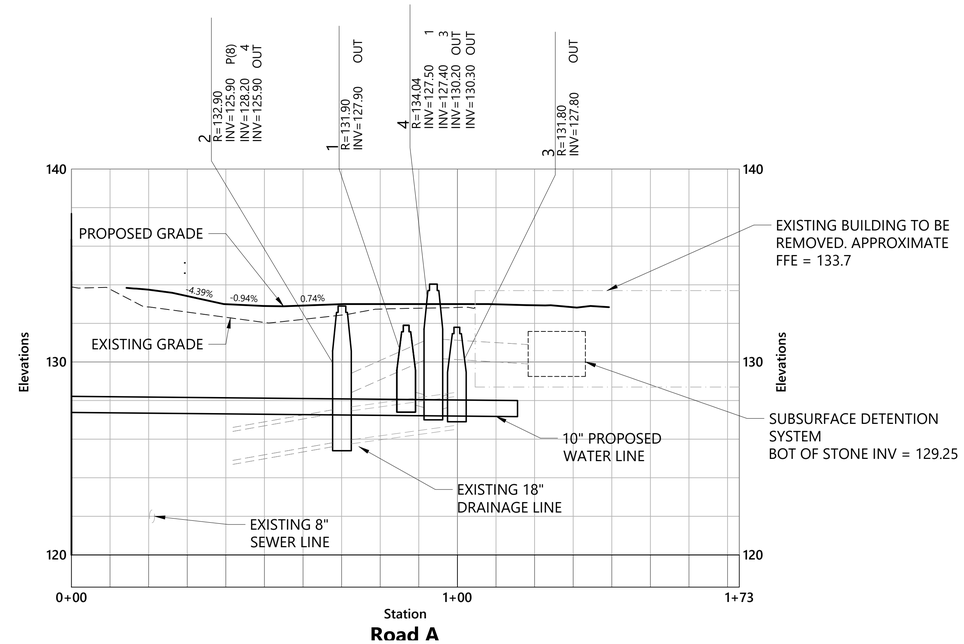

vhb.com
101 Walnut Street
PO Box 9151
Watertown, MA 02471
617.924.1770

Owner
BP 17 Hartwell LLC
C/O Boston Properties, Inc.
800 Boylston Street, Suite 1900
Boston, MA, 02199-8103

Applicant
BP 17 Hartwell LLC
800 Boylston Street, Suite 1900
Boston, MA, 02199-8103

0 10 20 40 Feet

17 Hartwell Avenue

17 Hartwell Ave
Lexington, MA

No.	Revision	Date	Appvd.

Designed by | Checked by
Issued for | Date
April 29, 2022

Not Approved for Construction

Drawing Title
Street Layout and Profiles

Drawing Number
C6.01

Sheet 8 of 10

Project Number
15463.00

COMMONWEALTH OF MASSACHUSETTS
NICHOLAS J. SKOLY
CIVIL
No. 52677
REGISTERED PROFESSIONAL ENGINEER

I DECLARE, TO THE BEST OF MY PROFESSIONAL KNOWLEDGE, INFORMATION, AND BELIEF, THAT THIS PLAN WAS PREPARED IN ACCORDANCE WITH THE RULES AND REGULATIONS OF THE REGISTERS OF DEEDS.

DATE

I, _____, CLERK OF THE TOWN OF LEXINGTON, MASSACHUSETTS HEREBY CERTIFY THAT THE NOTICE OF APPROVAL OF THIS PLAN BY THE LEXINGTON PLANNING BOARD HAS BEEN RECEIVED AND RECORDED AT THIS OFFICE AND NO NOTICE OF APPEAL WAS RECEIVED DURING THE TWENTY DAYS NEXT AFTER SUCH RECEIPT AND RECORDING OF SAID NOTICE.

TOWN CLERK DATE

APPROVED BY:
LEXINGTON PLANNING BOARD

RESERVED FOR REGISTRY USE ONLY

Saved Thursday, June 30, 2022 3:54:15 PM SMORTON Plotted Thursday, June 30, 2022 4:09:44 PM Sarah Morton

Planting Notes

1. ALL PROPOSED PLANTING LOCATIONS SHALL BE STAKED AS SHOWN ON THE PLANS FOR FIELD REVIEW AND APPROVAL BY THE LANDSCAPE ARCHITECT PRIOR TO INSTALLATION.
2. CONTRACTOR SHALL VERIFY LOCATIONS OF ALL BELOW GRADE AND ABOVE GROUND UTILITIES AND NOTIFY OWNERS REPRESENTATIVE OF CONFLICTS.
3. NO PLANT MATERIALS SHALL BE INSTALLED UNTIL ALL GRADING AND CONSTRUCTION HAS BEEN COMPLETED IN THE IMMEDIATE AREA. CONTRACTOR SHALL NOTIFY OWNER'S REPRESENTATIVE OF ANY CONFLICT.
4. A 3-INCH DEEP MULCH PER SPECIFICATION SHALL BE INSTALLED UNDER ALL TREES AND SHRUBS, AND IN ALL PLANTING BEDS, UNLESS OTHERWISE INDICATED ON THE PLANS, OR AS DIRECTED BY OWNER'S REPRESENTATIVE.
5. ALL TREES SHALL BE BALLED AND BURLAPPED, UNLESS OTHERWISE NOTED IN THE DRAWINGS OR SPECIFICATION, OR APPROVED BY THE OWNER'S REPRESENTATIVE.
6. FINAL QUANTITY FOR EACH PLANT TYPE SHALL BE AS GRAPHICALLY SHOWN ON THE PLAN. THIS NUMBER SHALL TAKE PRECEDENCE IN CASE OF ANY DISCREPANCY BETWEEN QUANTITIES SHOWN ON THE PLANT LIST AND ON THE PLAN. THE CONTRACTOR SHALL REPORT ANY DISCREPANCIES BETWEEN THE NUMBER OF PLANTS SHOWN ON THE PLANT LIST AND PLANT LABELS PRIOR TO BIDDING.
7. ANY PROPOSED PLANT SUBSTITUTIONS MUST BE REVIEWED BY LANDSCAPE ARCHITECT AND APPROVED IN WRITING BY THE OWNER'S REPRESENTATIVE.
8. ALL PLANT MATERIALS INSTALLED SHALL MEET THE SPECIFICATIONS OF THE "AMERICAN STANDARDS FOR NURSERY STOCK" BY THE AMERICAN ASSOCIATION OF NURSERYMEN AND CONTRACT DOCUMENTS.
9. ALL PLANT MATERIALS SHALL BE GUARANTEED FOR ONE YEAR FOLLOWING DATE OF FINAL ACCEPTANCE.
10. AREAS DESIGNATED "LOAM & SEED" SHALL RECEIVE MINIMUM 6" OF LOAM AND SPECIFIED SEED MIX. LAWNS OVER 2:1 SLOPE SHALL BE PROTECTED WITH EROSION CONTROL FABRIC.
11. ALL DISTURBED AREAS NOT OTHERWISE NOTED ON CONTRACT DOCUMENTS SHALL BE LOAM AND SEEDED OR MULCHED AS DIRECTED BY OWNER'S REPRESENTATIVE.
12. THIS PLAN IS INTENDED FOR PLANTING PURPOSES. REFER TO SITE / CIVIL DRAWINGS FOR ALL OTHER SITE CONSTRUCTION INFORMATION.
13. NO EXISTING TREES ARE BEING REMOVED, RETAINED, OR TRANSPLANTED WITHIN THE LIMIT OF WORK.

Tree Protection

1. EXISTING TREES TO REMAIN SHALL BE PROTECTED WITH TEMPORARY CONSTRUCTION FENCE. ERECT FENCE AT EDGE OF THE TREE DRIPLINE PRIOR TO START OF CONSTRUCTION.
2. CONTRACTOR SHALL NOT OPERATE VEHICLES WITHIN THE TREE PROTECTION AREA. CONTRACTOR SHALL NOT STORE VEHICLES OR MATERIALS, OR DISPOSE OF ANY WASTE MATERIALS, WITHIN THE TREE PROTECTION AREA.
3. DAMAGE TO EXISTING TREES CAUSED BY THE CONTRACTOR SHALL BE REPAIRED BY A CERTIFIED ARBORIST AT THE CONTRACTOR'S EXPENSE.

Plant Maintenance Notes

1. CONTRACTOR SHALL PROVIDE COMPLETE MAINTENANCE OF THE LAWNS AND PLANTINGS. NO IRRIGATION IS PROPOSED FOR THIS SITE. THE CONTRACTOR SHALL SUPPLY SUPPLEMENTAL WATERING FOR NEW LAWNS AND PLANTINGS DURING THE ONE YEAR PLANT GUARANTEE PERIOD.
2. CONTRACTOR SHALL PROVIDE ALL MATERIALS, LABOR, AND EQUIPMENT FOR THE COMPLETE LANDSCAPE MAINTENANCE WORK. WATER SHALL BE PROVIDED BY THE CONTRACTOR.
3. WATERING SHALL BE REQUIRED DURING THE GROWING SEASON, WHEN NATURAL RAINFALL IS BELOW ONE INCH PER WEEK.
4. WATER SHALL BE APPLIED IN SUFFICIENT QUANTITY TO THOROUGHLY SATURATE THE SOIL IN THE ROOT ZONE OF EACH PLANT.
5. CONTRACTOR SHALL REPLACE DEAD OR DYING PLANTS AT THE END OF THE ONE YEAR GUARANTEE PERIOD. CONTRACTOR SHALL TURN OVER MAINTENANCE TO THE FACILITY MAINTENANCE STAFF AT THAT TIME.

PLANT SCHEDULE

DECIDUOUS TREES	QTY	BOTANICAL NAME	COMMON NAME	SIZE	RATE OF GROWTH	MATURE SIZE
CO	5	Celtis occidentalis	Common Hackberry	3 - 3 1/2" CAL.	Fast	40-60'H X 40-60'W
NS	5	Nyssa sylvatica	Black Tupelo	3 - 3 1/2" CAL.	Medium	30-50'H X 20-30'W
TA	5	Tilia americana	American Linden	3 - 3 1/2" CAL.	Medium	50-80'H X 30-50'W

FLOWERING TREES	QTY	BOTANICAL NAME	COMMON NAME	SIZE	RATE OF GROWTH	MATURE SIZE
ACS	3	Amelanchier canadensis	Shadblow Serviceberry	8 - 10` HT./Multi-Stem	Medium	25-30'H X 15-20'W

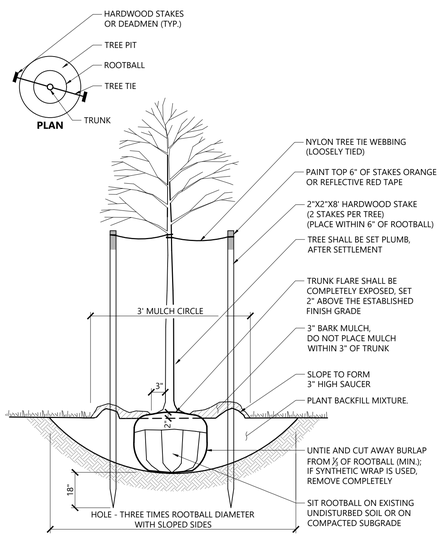

Tree Planting (For Trees Under 4" Caliper) 9/21

N.T.S. Source: VHB LD_602

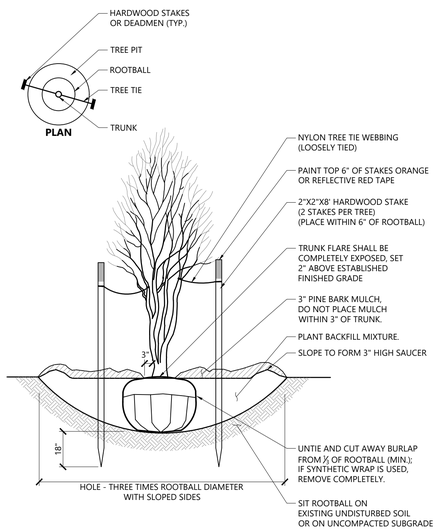

Multistem Tree Planting 9/21

N.T.S. Source: VHB LD_606

I DECLARE, TO THE BEST OF MY PROFESSIONAL KNOWLEDGE, INFORMATION, AND BELIEF, THAT THIS PLAN WAS PREPARED IN ACCORDANCE WITH THE RULES AND REGULATIONS OF THE REGISTERS OF DEEDS.

_____ _____
DATE

I, _____, CLERK OF THE TOWN OF LEXINGTON, MASSACHUSETTS HEREBY CERTIFY THAT THE NOTICE OF APPROVAL OF THIS PLAN BY THE LEXINGTON PLANNING BOARD HAS BEEN RECEIVED AND RECORDED AT THIS OFFICE AND NO NOTICE OF APPEAL WAS RECEIVED DURING THE TWENTY DAYS NEXT AFTER SUCH RECEIPT AND RECORDING OF SAID NOTICE.

_____ _____
TOWN CLERK DATE

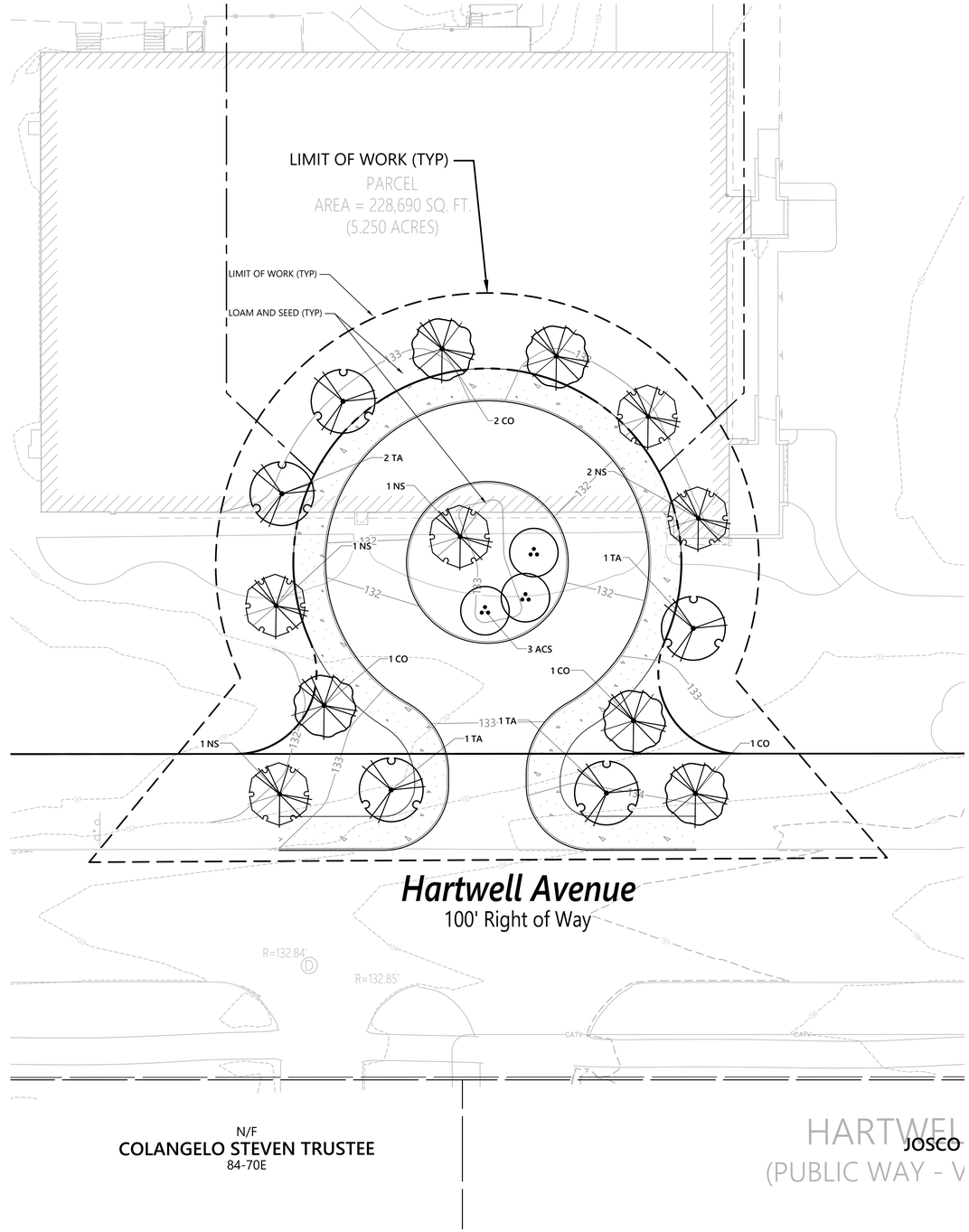

0 10 20 40 Feet

vhb.com
101 Walnut Street
PO Box 9151
Watertown, MA 02471
617.924.1770

Owner
BP 17 Hartwell LLC
C/O Boston Properties, Inc.
800 Boylston Street, Suite 1900
Boston, MA, 02199-8103

Applicant
BP 17 Hartwell LLC
800 Boylston Street, Suite 1900
Boston, MA, 02199-8103

17 Hartwell Avenue
17 Hartwell Ave
Lexington, MA

No.	Revision	Date	Appvd.

Designed by | Checked by
Issued for | Date
April 29, 2022

Not Approved for Construction

Drawing Title
Landscape Plan

RESERVED FOR REGISTRY USE ONLY

APPROVED BY:
LEXINGTON PLANNING BOARD

MASSACHUSETTS RICHARD A. KUCHMAN NO. 1513 REGISTERED LANDSCAPE ARCHITECT
4/29/2022

Drawing Number
C7.01

Sheet 9 of 10

Project Number
15463.00

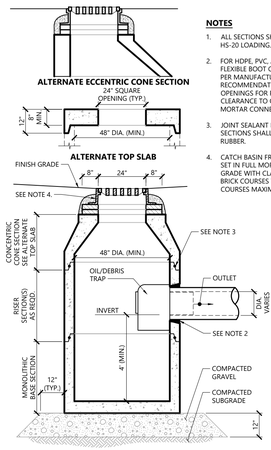

NOTES

1. ALL SECTIONS SHALL BE DESIGNED FOR HS-20 LOADING.
2. FOR HDPE, PVC, AND DI PIPE, PROVIDE FLEXIBLE BOOT CONNECTION INSTALLED PER MANUFACTURER'S RECOMMENDATIONS. FOR RCP, PROVIDE OPENINGS FOR PIPES WITH 2" MAX. CLEARANCE TO OUTSIDE OF PIPE AND MORTAR CONNECTIONS.
3. JOINT SEALANT BETWEEN PRECAST SECTIONS SHALL BE PREFORMED BUTYL RUBBER.
4. CATCH BASIN FRAME AND GRATE SHALL BE SET IN FULL MORTAR BED. ADJUST TO GRADE WITH CLAY BRICK AND MORTAR (2 BRICK COURSES TYPICALLY, 5 BRICK COURSES MAXIMUM).

Catch Basin (CB) With Oil/Debris Trap

3/21

N.T.S. Source: VHB LD_101

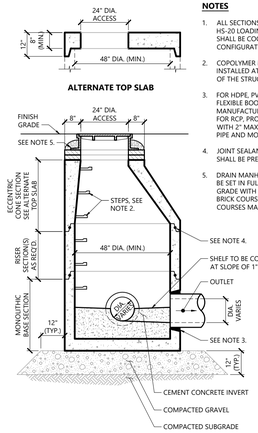

NOTES

1. ALL SECTIONS SHALL BE DESIGNED FOR HS-20 LOADING. DIAMETER OF STRUCTURES SHALL BE COORDINATED WITH PIPE CONFIGURATIONS.
2. COPOLYMER MANHOLE STEPS SHALL BE INSTALLED AT 12" O.C. FOR THE FULL DEPTH OF THE STRUCTURE.
3. FOR HDPE, PVC, AND DI PIPE, PROVIDE FLEXIBLE BOOT CONNECTION INSTALLED PER MANUFACTURER'S RECOMMENDATIONS. FOR RCP, PROVIDE OPENINGS FOR PIPES WITH 2" MAX. CLEARANCE TO OUTSIDE OF PIPE AND MORTAR CONNECTIONS.
4. JOINT SEALANT BETWEEN PRECAST SECTIONS SHALL BE PREFORMED BUTYL RUBBER.
5. DRAIN MANHOLE FRAME AND COVER SHALL BE SET IN FULL MORTAR BED. ADJUST TO GRADE WITH CLAY BRICK AND MORTAR (2 BRICK COURSES TYPICALLY, 5 BRICK COURSES MAXIMUM)

Drain Manhole (DMH)

11/19

N.T.S. Source: VHB LD_115

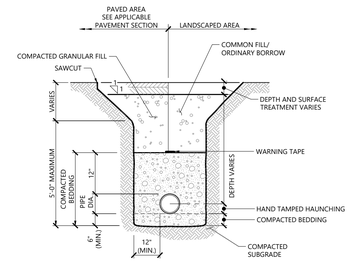

NOTES

1. WHERE UTILITY TRENCHES ARE CONSTRUCTED THROUGH DETENTION BASIN BERMS OR OTHER SUCH SPECIAL SECTIONS, PLACE TRENCH BACKFILL WITH MATERIALS SIMILAR TO THE SPECIAL SECTION REQUIREMENTS.
2. USE METALLIC TRACING/WARNING TAPE OVER ALL PIPES.
3. COMPACTED GRANULAR FILL MAY CONSIST OF GRAVEL, CRUSHED STONE, SAND, OR OTHER MATERIAL AS APPROVED BY ENGINEER.

Utility Trench

11/19

N.T.S. Source: VHB LD_300

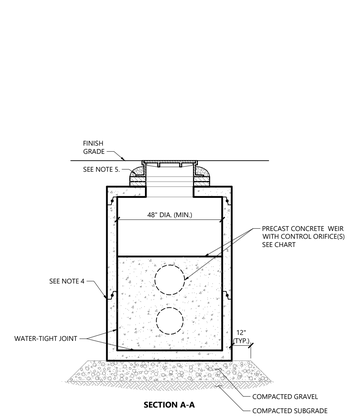

NOTES

1. ALL SECTIONS SHALL BE DESIGNED FOR HS-20 LOADING. DIAMETER OF STRUCTURES SHALL BE COORDINATED WITH PIPE CONFIGURATIONS.
2. COPOLYMER MANHOLE STEPS SHALL BE INSTALLED AT 12" O.C. FOR THE FULL DEPTH OF THE STRUCTURE.
3. FOR HDPE, PVC, AND DI PIPE, PROVIDE FLEXIBLE BOOT CONNECTION INSTALLED PER MANUFACTURER'S RECOMMENDATIONS. FOR RCP, PROVIDE OPENINGS FOR PIPES WITH 2" MAX. CLEARANCE TO OUTSIDE OF PIPE AND MORTAR CONNECTIONS.
4. JOINT SEALANT BETWEEN PRECAST SECTIONS SHALL BE PREFORMED BUTYL RUBBER.
5. DRAIN MANHOLE FRAME AND COVER SHALL BE SET IN FULL MORTAR BED. ADJUST TO GRADE WITH CLAY BRICK AND MORTAR (2 BRICK COURSES TYPICALLY, 5 BRICK COURSES MAXIMUM)

Outlet Control Structure with Weir (OCS)

3/20

N.T.S. Source: VHB REV LD_16ZA

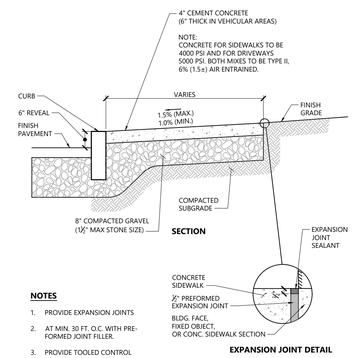

NOTES

1. PROVIDE EXPANSION JOINTS
2. AT MIN. 30 FT. O.C. WITH PRE-FORMED JOINT FILLER.
3. PROVIDE TOOLED CONTROL JOINTS AT 6' O.C.
4. PROVIDE BROOM FINISH IN DIRECTION PERPENDICULAR TO CURB.

Concrete Sidewalk

1/16

N.T.S. Source: VHB LD_420

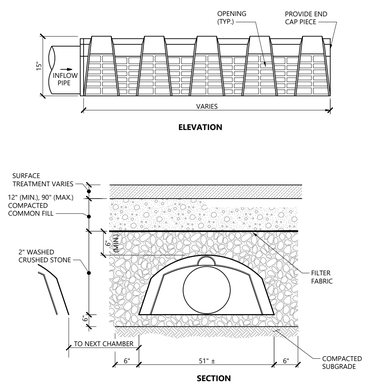

NOTES

ALL DIMENSIONS AND INSTALLATION PROCEDURES MUST BE IN CONFORMANCE WITH MANUFACTURER'S RECOMMENDATIONS AND AS APPROVED BY ENGINEER.

Recharge Chamber

1/16

N.T.S. Source: VHB LD_182

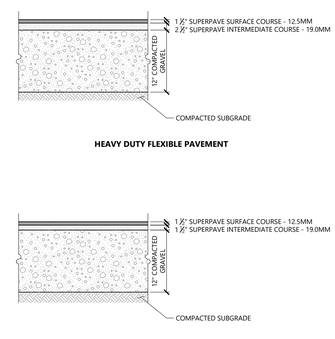

NOTES

PAVEMENT SECTIONS ARE SUBJECT TO CHANGE AND WILL BE BASED ON THE RESULTS OF FURTHER GEOTECHNICAL INVESTIGATIONS.

Bituminous Concrete Pavement Sections

11/19

N.T.S. Source: VHB LD_430

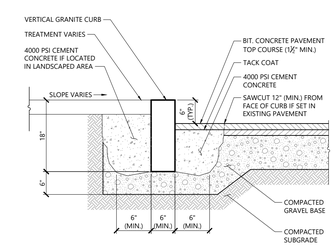

Vertical Granite Curb (VGC)

3/20

N.T.S. Source: VHB LD_402

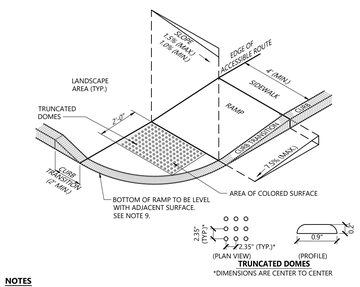

NOTES

1. THE MAXIMUM ALLOWABLE SIDEWALK AND CURB RAMP CROSS SLOPES SHALL BE 1.5 (1% MIN.).
2. THE MAXIMUM ALLOWABLE SLOPE OF ACCESSIBLE ROUTE EXCLUDING CURB RAMPS SHALL BE 5%.
3. THE MAXIMUM ALLOWABLE SLOPE OF ACCESSIBLE ROUTE AT CURB RAMPS SHALL BE 7.5%.
4. A MINIMUM OF 3 FEET CLEAR SHALL BE MAINTAINED AT ANY PERMANENT OBSTACLE IN ACCESSIBLE ROUTE (I.E., HYDRANTS, UTILITY POLES, TREE WELLS, SIGNS, ETC.).
5. CURB TREATMENT VARIES, SEE PLANS FOR CURB TYPE.
6. RAMP, CURB AND ADJACENT PAVEMENTS SHALL BE GRADED TO PREVENT PONDING.
7. SEE TYPICAL SIDEWALK SECTION FOR RAMP CONSTRUCTION.
8. WHERE ACCESSIBLE ROUTES ARE LESS THAN 5' IN WIDTH (EXCLUDING CURBING) A 5' x 5' PASSING AREA SHALL BE PROVIDED AT INTERVALS NOT TO EXCEED 200 FEET.
9. ELIMINATE CURBING AT RAMP WHERE IT ABUTS ROADWAY, EXCEPT WHERE VERTICAL CURBING IS INDICATED ON THE DRAWINGS TO BE INSTALLED AND SET FLUSH.
10. DETECTABLE WARNINGS SHALL CONTRAST VISUALLY WITH ADJOINING SURFACES.
11. DETECTABLE WARNINGS SHALL BE INSTALLED PERPENDICULAR TO THE ACCESSIBLE ROUTE.
12. CONTRACTOR TO SUBMIT R.F.I. FOR THIS TYPE OF ACCESSIBLE CURB RAMP FOR APEX ROADWAY CROSSINGS.

Accessible Curb Ramp (ACR) - Type 'B-D'

12/20

N.T.S. Source: VHB LD_501

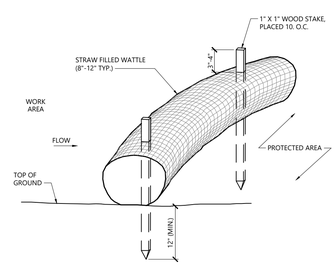

NOTES

1. STRAW WATTLE SHALL BE AS MANUFACTURED BY EARTHSAVER OR APPROVED EQUAL.
2. STRAW WATTLES SHALL OVERLAP A MINIMUM OF 12 INCHES.
3. STRAW WATTLE SHALL BE INSPECTED PERIODICALLY AND AFTER ALL STORM EVENTS, AND REPAIR OR REPLACEMENT SHALL BE PERFORMED PROMPTLY AS NEEDED.
4. TEMPORARY STRAW WATTLES TO BE REMOVED BY CONTRACTOR. ALL OTHERS TO REMAIN IN PLACE UNLESS DIRECTED OTHERWISE BY ENGINEER.
5. IF NON BIODEGRADABLE NETTING IS USED THE NETTING SHALL BE COLLECTED AND DISPOSED OF OFFSITE.

Straw Wattle - Erosion Control Barrier

1/20

N.T.S. Source: VHB LD_659

I DECLARE, TO THE BEST OF MY PROFESSIONAL KNOWLEDGE, INFORMATION, AND BELIEF, THAT THIS PLAN WAS PREPARED IN ACCORDANCE WITH THE RULES AND REGULATIONS OF THE REGISTERS OF DEEDS.

_____ _____
DATE

I, _____, CLERK OF THE TOWN OF LEXINGTON, MASSACHUSETTS HEREBY CERTIFY THAT THE NOTICE OF APPROVAL OF THIS PLAN BY THE LEXINGTON PLANNING BOARD HAS BEEN RECEIVED AND RECORDED AT THIS OFFICE AND NO NOTICE OF APPEAL WAS RECEIVED DURING THE TWENTY DAYS NEXT AFTER SUCH RECEIPT AND RECORDING OF SAID NOTICE.

_____ _____
TOWN CLERK DATE

APPROVED BY:
LEXINGTON PLANNING BOARD

RESERVED FOR REGISTRY USE ONLY

vhb.com

101 Walnut Street
PO Box 9151
Watertown, MA 02471
617.924.1770

Owner

BP 17 Hartwell LLC
C/O Boston Properties, Inc.
800 Boylston Street, Suite 1900
Boston, MA, 02199-8103

Applicant

BP 17 Hartwell LLC
800 Boylston Street, Suite 1900
Boston, MA, 02199-8103

17 Hartwell Avenue

17 Hartwell Ave
Lexington, MA

No.	Revision	Date	Appvd.

Designed by | Checked by
Issued for | Date
April 29, 2022

Not Approved for Construction

Drawing Title
Construction Details

Drawing Number
C8.01

COMMONWEALTH OF MASSACHUSETTS
NICHOLAS J. SKOLY
CIVIL
No. 52677
REGISTERED PROFESSIONAL ENGINEER

Sheet 10 of 10

Project Number
15463.00

Saved Thursday, March 24, 2022 8:29:30 AM SMORTON Plotted Thursday, June 30, 2022 4:10:49 PM Sarah Morton

COVENANT

BP 17 HARTWELL LLC (herein called the "Developer" or the "Owner") submitted an application dated May 6, 2022, to the Planning Board of the Town of Lexington, a municipal corporation situated in Middlesex County, Massachusetts (herein called the "Planning Board" or "Town"), for the approval of a definitive plan of a certain subdivision entitled "17 Hartwell Avenue, Lexington, Mass" by VHB dated April 29, 2022. _____ ; and

WHEREAS, the Developer has requested the Planning Board to approve such definitive plan without requiring a performance bond or other surety;

NOW THEREFORE, in consideration of the Planning Board approving the definitive plan without requiring a performance bond or other surety, and in consideration of one dollar in hand paid, receipt whereof is hereby acknowledged, the Developer represents, covenants and agrees with the Town pursuant to Massachusetts General Laws, Chapter 81, Section 81U, as amended, as follows:

1. The Developer is the owner in fee simple of all the land included in the aforesaid subdivision and there are no mortgages of record or otherwise on any of said land.

2. This Covenant shall run with the land included in the aforesaid subdivision and shall operate as a restriction upon said land.

3. The ways and municipal services required to serve the lots in said subdivision shall be installed and constructed as shown on the definitive plan and in accordance with the Rules and Regulations of the Planning Board of the Town, with such modifications or conditions, if any, as have been imposed by the Planning Board or Board of Health of the Town, such modifications or conditions being set forth in a Certificate of Action dated June 29, 2022 and submitted to the Town Clerk on July 11, 2022 to be recorded herewith, before such lots may be built upon or conveyed other than by a mortgage deed; provided that a mortgagee who acquires title to the mortgaged premises by foreclosure or otherwise and any succeeding owner of such premises or part thereof may sell any such lots subject to the limitation that no lots shall be built upon until such ways and services have been provided to serve such lots; and provided further that nothing herein shall be deemed to prohibit a conveyance by a single deed, subject to this Covenant, of either the entire parcel of land shown on the definitive plan or of all lots shown on the definitive plan not previously released by the Planning Board.

4. Reference to this Covenant shall be entered upon the definitive plan and this Covenant shall be recorded when the definitive plan is recorded.

5. Lots within the subdivision may be released from the foregoing conditions only upon the recording of a written release executed by a majority of the Planning Board and specifically enumerating the lots to be released thereunder.

6. This Covenant shall be binding upon the executors, administrators, devisees, heirs, successors and assigns of the Developer.

Executed as a sealed instrument this ____ day of _____ 2022.

WITNESS

_____

OWNER

BP 17 HARTWELL LLC

BY: BOSTON PROPERTIES LIMITED PARTNERSHIP, a Delaware limited partnership, its member and manager

BY: BOSTON PROPERTIES, INC., a Delaware corporation, its general partner

BY: _____
Name:
Title:

COMMONWEALTH OF MASSACHUSETTS

County of _____, SS

On this _____ day of _____ 2022, before me, the undersigned notary public, personally appeared _____, the _____ of Boston Properties, Inc., being the General Partner of Boston Properties Limited Partnership, it being the Sole Member and Manager of BP 17 Hartwell LLC, proved to me through personal knowledge to be the person whose name is signed on the preceding or attached document, and acknowledged to me that he signed it voluntarily for its stated purpose.

_____
Frederick J. DeAngelis,
Notary Public
My commission expires:

Executed under seal as of the_____day of_____, 2022

Signature of Planning Board Members

_____
Board Member's Name Printed

_____
Signature of Planning Board Member

_____
Board Member's Name Printed

_____
Signature of Planning Board Member

_____
Board Member's Name Printed

_____
Signature of Planning Board Member

_____
Board Member's Name Printed

_____
Signature of Planning Board Member

_____
Board Member's Name Printed

Signatures of a Majority of the Members of the Planning Board of the Town of Lexington

COMMONWEALTH OF MASSACHUSETTS

MIDDLESEX COUNTY, ss

On this ____ day of_____20___ , before me, the undersigned notary public,

personally, appeared the Lexington Planning Board member Robert D. Peters proved to me through satisfactory evidence of identification, which were known to be the persons whose names are signed on the proceeding or attached document, and acknowledgement tome that (he) (she}signed it voluntarily for its stated purpose.

_____

Abigail McCabe, Notary Public
My Commission Expires _ _ _ _

COMMONWEALTH OF MASSACHUSETTS

MIDDLESEX COUNTY, ss

On this ____ day of_____20___ , before me, the undersigned notary public,

personally, appeared the Lexington Planning Board member Robert Creech proved to me through satisfactory evidence of identification, which were known to be the persons whose names are signed on the proceeding or attached document, and acknowledgement tome that (he) (she}signed it voluntarily for its stated purpose.

_____

Abigail McCabe, Notary Public
My Commission Expires _ _ _ _

COMMONWEALTH OF MASSACHUSETTS

MIDDLESEX COUNTY, ss

On this ____ day of_____20___ , before me, the undersigned notary public, personally appeared the Lexington Planning Board member Charles Hornig proved to me through satisfactory evidence of identification, which were _____ to be the persons whose names are signed on the proceeding or attached document, and acknowledgement tome that (he) (she}signed it voluntarily for its stated purpose.

_____

Abigail McCabe, Notary Public

My Commission Expires ____

AGENDA ITEM SUMMARY

LEXINGTON PLANNING BOARD

AGENDA ITEM TITLE:

Staff Updates

PRESENTER:

Board & Staff

ITEM NUMBER:

SUMMARY:

Staff Updates – Review Draft Planning Board Annual Report – Photograph
DHCD has issued final guidelines for MBTA Communities, attached are the final guidelines.

SUGGESTED MOTION:

FOLLOW-UP:

DATE AND APPROXIMATE TIME ON AGENDA:

8/17/2022

ATTACHMENTS:

	Description	Type
1	Final DHCD Guidelines for MBTA Communities	Exhibit

Commonwealth of Massachusetts
DEPARTMENT OF HOUSING & COMMUNITY DEVELOPMENT
Charles D. Baker, Governor ◆ Karyn E. Polito, Lt. Governor ◆ Jennifer D. Maddox, Undersecretary

Issue Date: August 10, 2022

Compliance Guidelines for Multi-family Zoning Districts Under Section 3A of the Zoning Act

1. Overview of Section 3A of the Zoning Act

Section 3A of the Zoning Act provides: *An MBTA community shall have a zoning ordinance or by-law that provides for at least 1 district of reasonable size in which multi-family housing is permitted as of right; provided, however, that such multi-family housing shall be without age restrictions and shall be suitable for families with children. For the purposes of this section, a district of reasonable size shall: (i) have a minimum gross density of 15 units per acre, subject to any further limitations imposed by section 40 of chapter 131 and title 5 of the state environmental code established pursuant to section 13 of chapter 21A; and (ii) be located not more than 0.5 miles from a commuter rail station, subway station, ferry terminal or bus station, if applicable.*

The purpose of Section 3A is to encourage the production of multi-family housing by requiring MBTA communities to adopt zoning districts where multi-family housing is allowed as of right, and that meet other requirements set forth in the statute.

The Department of Housing and Community Development, in consultation with the Massachusetts Bay Transportation Authority and the Massachusetts Department of Transportation, is required to promulgate guidelines to determine if an MBTA community is in compliance with Section 3A. DHCD promulgated preliminary guidance on January 29, 2021. DHCD updated that preliminary guidance on December 15, 2021, and on that same date issued draft guidelines for public comment. These final guidelines supersede all prior guidance and set forth how MBTA communities may achieve compliance with Section 3A.

2. Definitions

"Adjacent community" means an MBTA community that (i) has within its boundaries less than 100 acres of developable station area, and (ii) is not an adjacent small town.

"Adjacent small town" means an MBTA community that (i) has within its boundaries less than 100 acres of developable station area, and (ii) either has a population density of less than 500 persons per square mile, or a population of not more than 7,000 year-round residents as determined in the most recently published United States Decennial Census of Population and Housing.

“Affordable unit” means a multi-family housing unit that is subject to an affordable housing restriction with a term of no less than 30 years and eligible for inclusion on DHCD’s Subsidized Housing Inventory.

“Age-restricted housing” means any housing unit encumbered by a title restriction requiring a minimum age for some or all occupants.

“As of right” means development that may proceed under a zoning ordinance or by-law without the need for a special permit, variance, zoning amendment, waiver, or other discretionary zoning approval.

“Bus station” means a location with a passenger platform and other fixed infrastructure serving as a point of embarkation for the MBTA Silver Line. Upon the request of an MBTA community, DHCD, in consultation with the MBTA, may determine that other locations qualify as a bus station if (i) such location has a sheltered platform or other fixed infrastructure serving a point of embarkation for a high-capacity MBTA bus line, and (ii) the area around such fixed infrastructure is highly suitable for multi-family housing.

“Commuter rail community” means an MBTA community that (i) does not meet the criteria for a rapid transit community, and (ii) has within its borders at least 100 acres of developable station area associated with one or more commuter rail stations.

“Commuter rail station” means any MBTA commuter rail station with year-round, rather than intermittent, seasonal, or event-based, service, including stations under construction and scheduled to being service before the end of 2023, but not including existing stations at which service will be terminated, or reduced below regular year-round service, before the end of 2023.

“Compliance model” means the model created by DHCD to determine compliance with Section 3A’s reasonable size, gross density, and location requirements. The compliance model is described in further detail in Appendix 2.

“Determination of compliance” means a determination made by DHCD as to whether an MBTA community has a multi-family zoning district that complies with the requirements of Section 3A. A determination of compliance may be determination of interim compliance or a determination of district compliance, as described in section 9.

“Developable land” means land on which multi-family housing can be permitted and constructed. For purposes of these guidelines, developable land consists of: (i) all privately-owned land except lots or portions of lots that meet the definition of excluded land, and (ii) developable public land.

“Developable public land” means any publicly-owned land that (i) is used by a local housing authority; (ii) has been identified as a site for housing development in a housing production plan approved by DHCD; or (iii) has been designated by the public owner for disposition and redevelopment. Other publicly-owned land may qualify as developable public land if DHCD determines, at the request of an MBTA community and after consultation with the public owner, that such land is the location of obsolete structures or uses, or otherwise is suitable for conversion to

multi-family housing, and will be converted to or made available for multi-family housing within a reasonable period of time.

"Developable station area" means developable land that is within 0.5 miles of a transit station.

"DHCD" means the Department of Housing and Community Development.

"EOHED" means the Executive Office of Housing and Economic Development.

"Excluded land" means land areas on which it is not possible or practical to construct multi-family housing. For purposes of these guidelines, excluded land is defined by reference to the ownership, use codes, use restrictions, and hydrological characteristics in MassGIS and consists of the following:

(i) All publicly-owned land, except for lots or portions of lots determined to be developable public land.
(ii) All rivers, streams, lakes, ponds and other surface waterbodies.
(iii) All wetland resource areas, together with a buffer zone around wetlands and waterbodies equivalent to the minimum setback required by title 5 of the state environmental code.
(iv) Protected open space and recreational land that is legally protected in perpetuity (for example, land owned by a local land trust or subject to a conservation restriction), or that is likely to remain undeveloped due to functional or traditional use (for example, cemeteries).
(v) All public rights-of-way and private rights-of-way.
(vi) Privately-owned land on which development is prohibited to protect private or public water supplies, including, but not limited to, Zone I wellhead protection areas and Zone A surface water supply protection areas.
(vii) Privately-owned land used for educational or institutional uses such as a hospital, prison, electric, water, wastewater or other utility, museum, or private school, college or university.

"Ferry terminal" means the location where passengers embark and disembark from regular, year-round MBTA ferry service.

"Gross density" means a units-per-acre density measurement that includes land occupied by public rights-of-way and any recreational, civic, commercial, and other nonresidential uses.

"Housing suitable for families" means housing comprised of residential dwelling units that are not age-restricted housing, and for which there are no zoning restriction on the number of bedrooms, the size of bedrooms, or the number of occupants.

"Listed funding sources" means (i) the Housing Choice Initiative as described by the governor in a message to the general court dated December 11, 2017; (ii) the Local Capital Projects Fund established in section 2EEEE of chapter 29; and (iii) the MassWorks infrastructure program established in section 63 of chapter 23A.

“Lot” means an area of land with definite boundaries that is used or available for use as the site of a building or buildings.

“MassGIS data” means the comprehensive, statewide database of geospatial information and mapping functions maintained by the Commonwealth's Bureau of Geographic Information, within the Executive Office of Technology Services and Security, including the lot boundaries and use codes provided by municipalities.

“MBTA” means the Massachusetts Bay Transportation Authority.

“MBTA community” means a city or town that is: (i) one of the 51 cities and towns as defined in section 1 of chapter 161A; (ii) one of the 14 cities and towns as defined in said section 1 of said chapter 161A; (iii) other served communities as defined in said section 1 of said chapter 161A; or (iv) a municipality that has been added to the Massachusetts Bay Transportation Authority under section 6 of chapter 161A or in accordance with any special law relative to the area constituting the authority.

“Multi-family housing” means a building with 3 or more residential dwelling units or 2 or more buildings on the same lot with more than 1 residential dwelling unit in each building.

“Multi-family unit capacity” means an estimate of the total number of multi-family housing units that can be developed as of right within a multi-family zoning district, made in accordance with the requirements of section 5.b below.

“Multi-family zoning district” means a zoning district, including a base district or an overlay district, in which multi-family housing is allowed as of right; provided that the district shall be in a fixed location or locations, and shown on a map that is part of the zoning ordinance or by-law.

“One Stop Application” means the single application portal for the Community One Stop for Growth through which (i) the Executive Office of Housing and Economic Development considers requests for funding from the MassWorks infrastructure program; (ii) DHCD considers requests for funding from the Housing Choice Initiative, (iii) EOHED, DHCD and other state agencies consider requests for funding from other discretionary grant programs.

“Private rights-of-way” means land area within which private streets, roads and other ways have been laid out and maintained, to the extent such land areas can be reasonably identified by examination of available tax parcel data.

“Publicly-owned land” means (i) any land owned by the United States or a federal agency or authority; (ii) any land owned by the Commonwealth of Massachusetts or a state agency or authority; and (iii) any land owned by a municipality or municipal board or authority.

“Public rights-of-way” means land area within which public streets, roads and other ways have been laid out and maintained, to the extent such land areas can be reasonably identified by examination of available tax parcel data.

"Rapid transit community" means an MBTA community that has within its borders at least 100 acres of developable station area associated with one or more subway stations, or MBTA Silver Line bus rapid transit stations.

"Residential dwelling unit" means a single unit providing complete, independent living facilities for one or more persons, including permanent provisions for living, sleeping, eating, cooking and sanitation.

"Section 3A" means section 3A of the Zoning Act.

"Sensitive land" means developable land that, due to its soils, slope, hydrology, or other physical characteristics, has significant conservation values that could be impaired, or vulnerabilities that could be exacerbated, by the development of multi-family housing. It also includes locations where multi-family housing would be at increased risk of damage caused by flooding. Sensitive land includes, but is not limited to, wetland buffer zones extending beyond the title 5 setback area; land subject to flooding that is not a wetland resource area; priority habitat for rare or threatened species; DEP-approved wellhead protection areas in which development may be restricted, but is not prohibited (Zone II and interim wellhead protection areas); and land areas with prime agricultural soils that are in active agricultural use.

"Site plan review" means a process established by local ordinance or by-law by which a local board reviews, and potentially imposes conditions on, the appearance and layout of a specific project prior to the issuance of a building permit.

"Subway station" means any of the stops along the MBTA Red Line, Green Line, Orange Line, or Blue Line, including any extensions to such lines now under construction and scheduled to begin service before the end of 2023.

"Transit station" means an MBTA subway station, commuter rail station, ferry terminal or bus station.

"Transit station area" means the land area within 0.5 miles of a transit station.

"Zoning Act" means chapter 40A of the Massachusetts General Laws.

3. General Principles of Compliance

These compliance guidelines describe how an MBTA community can comply with the requirements of Section 3A. The guidelines specifically address:

- What it means to allow multi-family housing "as of right."
- The metrics that determine if a multi-family zoning district is "of reasonable size."
- How to determine if a multi-family zoning district has a minimum gross density of 15 units per acre, subject to any further limitations imposed by section 40 of chapter 131 and title 5 of the state environmental code.

- The meaning of Section 3A's mandate that "such multi-family housing shall be without age restrictions and shall be suitable for families with children."

- The extent to which MBTA communities have flexibility to choose the location of a multi-family zoning district.

The following general principles have informed the more specific compliance criteria that follow:

- MBTA communities with subway stations, commuter rail stations and other transit stations benefit from having these assets located within their boundaries and should provide opportunity for multi-family housing development around these assets. MBTA communities with no transit stations within their boundaries benefit from proximity to transit stations in nearby communities.

- The multi-family zoning districts required by Section 3A should encourage the development of multi-family housing projects of a scale, density and aesthetic that are compatible with existing surrounding uses, and minimize impacts to sensitive land.

- "Reasonable size" is a relative rather than an absolute determination. Because of the diversity of MBTA communities, a multi-family zoning district that is "reasonable" in one city or town may not be reasonable in another city or town.

- When possible, multi-family zoning districts should be in areas that have safe, accessible, and convenient access to transit stations for pedestrians and bicyclists.

4. <u>Allowing Multi-Family Housing "As of Right"</u>

To comply with Section 3A, a multi-family zoning district must allow multi-family housing "as of right," meaning that the construction and occupancy of multi-family housing is allowed in that district without the need for a special permit, variance, zoning amendment, waiver, or other discretionary approval. DHCD will determine whether zoning provisions allow for multi-family housing as of right consistent with the following guidelines.

a. Site plan review

The Zoning Act does not establish nor recognize site plan review as an independent method of regulating land use. However, the Massachusetts courts have recognized site plan review as a permissible regulatory tool, including for uses that are permitted as of right. The court decisions establish that when site plan review is required for a use permitted as of right, site plan review involves the regulation of a use and not its outright prohibition. The scope of review is therefore limited to imposing reasonable terms and conditions on the proposed use, consistent with applicable case law.[1] These guidelines similarly recognize that site plan review may be required for multi-

[1] *See, e.g., Y.D. Dugout, Inc. v. Board of Appeals of Canton*, 357 Mass. 25 (1970); *Prudential Insurance Co. of America v. Board of Appeals of Westwood*, 23 Mass. App. Ct. 278 (1986); *Osberg v. Planning Bd. of Sturbridge*, 44 Mass. App. Ct. 56, 59 (1997) (Planning Board "may impose reasonable terms and conditions on the proposed use, but it does not have discretionary power to deny the use").

family housing projects that are allowed as of right, within the parameters established by the applicable case law. Site plan approval may regulate matters such as vehicular access and circulation on a site, architectural design of a building, and screening of adjacent properties. Site plan review should not unreasonably delay a project nor impose conditions that make it infeasible or impractical to proceed with a project that is allowed as of right and complies with applicable dimensional regulations.

b. Affordability requirements

Section 3A does not include any express requirement or authorization for an MBTA community to require affordable units in a multi-family housing project that is allowed as of right. It is a common practice in many cities and towns to require affordable units in a multi-family project that requires a special permit, or as a condition for building at greater densities than the zoning otherwise would allow. These inclusionary zoning requirements serve the policy goal of increasing affordable housing production. If affordability requirements are excessive, however, they can make it economically infeasible to construct new multi-family housing.

For purposes of making compliance determinations with Section 3A, DHCD will consider an affordability requirement to be consistent with as of right zoning as long as: (i) any affordable units required by the zoning are eligible to be listed on DHCD's Subsidized Housing Inventory; (ii) the zoning requires not more than 10 percent of the units in a project to be affordable units; and (iii) the cap on the income of families or individuals who are eligible to occupy the affordable units is not less than 80 percent of area median income. Notwithstanding the foregoing, the percentage of units required to be affordable units may be up to, but not more than, 20 percent of the units in a project, only if (i) the affordability requirement applicable in the multi-family zoning district pre-dates the enactment of Section 3A and the MBTA community demonstrates to DHCD that the affordability requirement has not made and will not make multi-family housing production infeasible, or (ii) the multi-family zoning district requires DHCD review and approval as a smart growth district under chapter 40R, or under another zoning incentive program administered by DHCD.

c. *Other requirements that do not apply uniformly in the multi-family zoning district*

Zoning will not be deemed compliant with Section 3A's requirement that multi-family housing be allowed as of right if the zoning imposes requirements on multi-family housing that are not generally applicable to other uses. The following are examples of requirements that would be deemed to be inconsistent with "as of right" use: (i) a requirement that multi-family housing meet higher energy efficiency standards than other uses; (ii) a requirement that a multi-family use achieve a third party certification that is not required for other uses in the district; and (iii) a requirement that multi-family use must be combined with commercial or other uses on the same lot or as part of a single project. Mixed use projects may be allowed as of right in a multi-family zoning district, as long as multi-family housing is separately allowed as of right.

5. <u>Determining "Reasonable Size"</u>

In making determinations of "reasonable size," DHCD will take into consideration both the land area of the multi-family zoning district, and the multi-family zoning district's multi-family unit capacity.

a. *Minimum land area*

A zoning district is a specifically delineated land area with uniform regulations and requirements governing the use of land and the placement, spacing, and size of buildings. For purposes of compliance with Section 3A, a multi-family zoning district should be a neighborhood-scale district, not a single development site on which the municipality is willing to permit a particular multi-family project. DHCD will certify compliance with Section 3A only if an MBTA community's multi-family zoning district meets the minimum land area applicable to that MBTA community, if any, as set forth in Appendix 1. The minimum land area for each MBTA community has been determined as follows:

(i) In rapid transit communities, commuter rail communities, and adjacent communities, the minimum land area of the multi-family zoning district is 50 acres, or 1.5% of the developable land in an MBTA community, whichever is *less.* In certain cases, noted in Appendix 1, a smaller minimum land area applies.

(ii) In adjacent small towns, there is no minimum land area. In these communities, the multi-family zoning district may comprise as many or as few acres as the community determines is appropriate, as long as the district meets the applicable minimum multi-family unit capacity and the minimum gross density requirements.

In all cases, at least half of the multi-family zoning district land areas must comprise contiguous lots of land. No portion of the district that is less than 5 contiguous acres land will count toward the minimum size requirement. If the multi-family unit capacity and gross density requirements can be achieved in a district of fewer than 5 acres, then the district must consist entirely of contiguous lots.

b. *Minimum multi-family unit capacity*

A reasonably sized multi-family zoning district must also be able to accommodate a reasonable number of multi-family housing units as of right. For purposes of determinations of compliance with Section 3A, DHCD will consider a reasonable multi-family unit capacity for each MBTA community to be a specified percentage of the total number of housing units within the community, with the applicable percentage based on the type of transit service in the community, as shown on Table 1:

Table 1.

Category	**Percentage of total housing units**
Rapid transit community	25%
Commuter rail community	15%
Adjacent community	10%
Adjacent small town	5%

To be deemed in compliance with Section 3A, each MBTA community must have a multi-family zoning district with a multi-family unit capacity equal to or greater than the minimum unit capacity shown for it in Appendix 1. The minimum multi-family unit capacity for each MBTA community has been determined as follows:

(i) First, by multiplying the number of housing units in that community by 0.25, 0.15, 0.10, or .05 depending on the MBTA community category. For example, a rapid transit community with 7,500 housing units is required to have a multi-family zoning district with a multi-family unit capacity of 7,500 x 0.25 = 1,875 multi-family units. For purposes of these guidelines, the number of total housing units in each MBTA community has been established by reference to the most recently published United States Decennial Census of Population and Housing.

(ii) Second, when there is a minimum land area applicable to an MBTA community, by multiplying that minimum land area (up to 50 acres) by Section 3A's minimum gross density requirement of 15 units per acre. The product of that multiplication creates a floor on multi-family unit capacity. For example, an MBTA community with a minimum land area of 40 acres must have a district with a multi-family unit capacity of at least 600 (40 x 15) units.

(iii) The minimum unit capacity applicable to each MBTA community is *the greater of* the numbers resulting from steps (i) and (ii) above, but subject to the following limitation: In no case does the minimum multi-family unit capacity exceed 25% of the total housing units in that MBTA community.

Example: The minimum multi-family unit capacity for an adjacent community with 1,000 housing units and a minimum land area of 50 acres is determined as follows:(i) first, by multiplying 1,000 x .1 = 100 units; (ii) second, by multiplying 50 x 15 = 750 units;(iii) by taking the larger number, but adjusting that number down, if necessary, so that unit capacity is no more than 25% of 1,000 = 250 units. In this case, the adjustment in step (iii) results in a minimum unit capacity of 250 units.

c. *Methodology for determining a multi-family zoning district's multi-family unit capacity*

MBTA communities seeking a determination of compliance must use the DHCD compliance model to provide an estimate of the number of multi-family housing units that can be developed as of right within the multi-family zoning district. The multi-family unit capacity of an existing or proposed district shall be calculated using the unit capacity worksheet described in Appendix 2. This worksheet produces an estimate of a district's multi-family unit capacity using inputs such as the amount of developable land in the district, the dimensional requirements applicable to lots and buildings (including, for example, height limitations, lot coverage limitations, and maximum floor area ratio), and the parking space requirements applicable to multi-family uses.

Minimum unit capacity is a measure of whether a multi-family zoning district is of a reasonable size, not a requirement to produce housing units. Nothing in Section 3A or these guidelines should be interpreted as a mandate to construct a specified number of housing units, nor as a housing production target. Demonstrating compliance with the minimum multi-family unit capacity requires only that an MBTA community show that the zoning allows multi-family housing as of right and that a sufficient number of multi-family housing units could be added to or replace existing uses and structures over time—even though such additions or replacements may be unlikely to occur soon.

If an MBTA community has two or more zoning districts in which multi-family housing is allowed as of right, then two or more districts may be considered cumulatively to meet the minimum land area and minimum multi-family unit capacity requirements, as long as each district independently complies with Section 3A's other requirements.

d. *Water and wastewater infrastructure within the multi-family zoning district*

MBTA communities are encouraged to consider the availability of water and wastewater infrastructure when selecting the location of a new multi-family zoning district. But compliance with Section 3A does not require a municipality to install new water or wastewater infrastructure, or add to the capacity of existing infrastructure, to accommodate future multi-family housing production within the multi-family zoning district. In most cases, multi-family housing can be created using private septic and wastewater treatment systems that meet state environmental standards. Where public systems currently exist, but capacity is limited, private developers may be able to support the cost of necessary water and sewer extensions. While the zoning must allow for gross average density of at least 15 units per acre, there may be other legal or practical limitations, including lack of infrastructure or infrastructure capacity, that result in actual housing production at lower density than the zoning allows.

The multi-family unit capacity analysis does not need to take into consideration limitations on development resulting from existing water or wastewater infrastructure within the multi-family zoning district, or, in areas not served by public sewer, any applicable limitations under title 5 of the state environmental code. For purposes of the unit capacity analysis, it is assumed that housing developers will design projects that work within existing water and wastewater constraints, and that developers, the municipality, or the Commonwealth will provide funding for infrastructure upgrades as needed for individual projects.

6. <u>Minimum Gross Density</u>

Section 3A expressly requires that a multi-family zoning district—not just the individual lots of land within the district—must have a minimum gross density of 15 units per acre, subject to any further limitations imposed by section 40 of chapter 131 and title 5 of the state environmental code established pursuant to section 13 of chapter 21A. The Zoning Act defines "gross density" as "a units-per-acre density measurement that includes land occupied by public rights-of-way and any recreational, civic, commercial and other nonresidential uses."

a. *District-wide gross density*

To meet the district-wide gross density requirement, the dimensional restrictions and parking requirements for the multi-family zoning district must allow for a gross density of 15 units per acre of land within the district. By way of example, to meet that requirement for a 40-acre multi-family zoning district, the zoning must allow for at least 15 multi-family units per acre, or a total of at least 600 multi-family units.

For purposes of determining compliance with Section 3A's gross density requirement, the DHCD compliance model will not count in the denominator any excluded land located within the multi-family zoning district, except public rights-of-way, private rights-of-way, and publicly-owned land used for recreational, civic, commercial, and other nonresidential uses. This method of

calculating minimum gross density respects the Zoning Act's definition of gross density—"a units-per-acre density measurement that includes land occupied by public rights-of-way and any recreational, civic, commercial and other nonresidential uses"—while making it unnecessary to draw patchwork multi-family zoning districts that carve out wetlands and other types of excluded land that are not developed or developable.

b. *Achieving district-wide gross density by sub-districts*

Zoning ordinances and by-laws typically limit the unit density on individual lots. To comply with Section 3A's gross density requirement, an MBTA community may establish reasonable sub-districts within a multi-family zoning district, with different density limits for each sub-district, provided that the gross density for the district as a whole meets the statutory requirement of not less than 15 multi-family units per acre. DHCD will review sub-districts to ensure that the density allowed as of right in each sub-district is reasonable and not intended to frustrate the purpose of Section 3A by allowing projects of a such high density that they are not likely to be constructed.

c. *Wetland and septic considerations relating to density*

Section 3A provides that a district of reasonable size shall have a minimum gross density of 15 units per acre, "subject to any further limitations imposed by section 40 of chapter 131 and title 5 of the state environmental code established pursuant to section 13 of chapter 21A." This directive means that even though the zoning district must permit 15 units per acre as of right, any multi-family housing produced within the district is subject to, and must comply with, the state wetlands protection act and title 5 of the state environmental code—even if such compliance means a proposed project will be less dense than 15 units per acre.

7. <u>Determining Suitability for Families with Children</u>

Section 3A states that a compliant multi-family zoning district must allow multi-family housing as of right, and that "such multi-family housing shall be without age restrictions and shall be suitable for families with children." DHCD will deem a multi-family zoning district to comply with these requirements as long as the zoning does not require multi-family uses to include units with age restrictions, and does not limit or restrict the size of the units, cap the number of bedrooms, the size of bedrooms, or the number of occupants, or impose a minimum age of occupants. Limits, if any, on the size of units or number of bedrooms established by state law or regulation are not relevant to Section 3A or to determinations of compliance made pursuant to these guidelines.

8. <u>Location of Districts</u>

a. General rule for determining the applicability of Section 3A's location requirement

Section 3A states that a compliant multi-family zoning district shall "be located not more than 0.5 miles from a commuter rail station, subway station, ferry terminal or bus station, if applicable." When an MBTA community has only a small amount of transit station area within its boundaries, it may not be possible or practical to locate all of the multi-family zoning district within 0.5 miles of a transit station. Transit station area may not be a practical location for a multi-family zoning district if it does not include developable land where multi-family housing can actually be

constructed. Therefore, for purposes of determining compliance with Section 3A, DHCD will consider the statute's location requirement to be "applicable" to a particular MBTA community only if that community has within its borders at least 100 acres of developable station area. DHCD will require more or less of the multi-family zoning district to be located within transit station areas depending on how much total developable station area is in that community, as shown on Table 2:

Table 2.

Total developable station area within the MBTA community (acres)	**Portion of the multi-family zoning district that must be within a transit station area**
0-100	0%
101-250	20%
251-400	40%
401-600	50%
601-800	75%
801+	90%

The percentages specified in this table apply to both the minimum land area and the minimum multi-family unit capacity. For example, in an MBTA community that has a total of 500 acres of transit station area within its boundaries, a multi-family zoning district will comply with Section 3A's location requirement if at least 50 percent of the district's minimum land area is located within the transit station area, *and* at least 50 percent of the district's minimum multi-family unit capacity is located within the transit station area.

A community with transit station areas associated with more than one transit station may locate the multi-family zoning district in any of the transit station areas. For example, a rapid transit community with transit station area around a subway station in one part of town, and transit station area around a commuter rail station in another part of town, may locate its multi-family zoning district in either or both transit station areas.

b. MBTA communities with limited or no transit station area

When an MBTA community has less than 100 acres of developable station area within its boundaries, the MBTA community may locate the multi-family zoning district anywhere within its boundaries. To encourage transit-oriented multi-family housing consistent with the general intent of Section 3A, MBTA communities are encouraged to consider locating the multi-family zoning district in an area with reasonable access to a transit station based on existing street patterns, pedestrian connections, and bicycle lanes, or in an area that qualifies as an "eligible location" as defined in Chapter 40A—for example, near an existing downtown or village center, near a regional transit authority bus stop or line, or in a location with existing under-utilized facilities that can be redeveloped into new multi-family housing.

c. General guidance on district location applicable to all MBTA communities

When choosing the location of a new multi-family zoning district, every MBTA community should consider how much of a proposed district is sensitive land on which permitting requirements and other considerations could make it challenging or inadvisable to construct multi-family housing. For example, an MBTA community may want to avoid including in a multi-family zoning district

areas that are subject to flooding, or are known habitat for rare or threatened species, or have prime agricultural soils in active agricultural use.

9. Determinations of Compliance

Section 3A provides that any MBTA community that fails to comply with Section 3A's requirements will be ineligible for funding from any of the listed funding sources. DHCD will make determinations of compliance with Section 3A in accordance with these guidelines to inform state agency decisions on which MBTA communities are eligible to receive funding from the listed funding sources. Determinations of compliance also may inform funding decisions by EOHED, DHCD, the MBTA and other state agencies which consider local housing policies when evaluating applications for discretionary grant programs, or making other discretionary funding decisions.

DHCD interprets Section 3A as allowing every MBTA community a reasonable opportunity to enact zoning amendments as needed to come into compliance. Accordingly, DHCD will recognize both *interim* compliance, which means an MBTA community is taking active steps to enact a multi-family zoning district that complies with Section 3A, and *district* compliance, which is achieved when DHCD determines that an MBTA community has a multi-family zoning district that complies with Section 3A. The requirements for interim and district compliance are described in more detail below.

Table 3.

Transit Category (# of municipalities)	Deadline to Submit Action Plan	Deadline to Submit District Compliance Application
Rapid transit community (12)	January 31, 2023	December 31, 2023
Commuter rail community (71)	January 31, 2023	December 31, 2024
Adjacent community (58)	January 31, 2023	December 31, 2024
Adjacent small town (34)	January 31, 2023	December 31, 2025

a. Process to achieve interim compliance

Many MBTA communities do not currently have a multi-family zoning district of reasonable size that complies with the requirements of Section 3A. Prior to achieving district compliance (but no later than the deadlines set forth in Table 3), these MBTA communities can achieve interim compliance by taking the following affirmative steps towards the creation of a compliant multi-family zoning district.

i. *Creation and submission of an action plan.* An MBTA community seeking to achieve interim compliance must first submit an action plan on a form to be provided by DHCD. An MBTA community action plan must provide information about current zoning, past planning for multi-family housing, if any, and potential locations for a multi-family zoning district. The action plan also will require the MBTA community to establish a timeline for various actions needed to create a compliant multi-family zoning district.

ii. *DHCD approval of an action plan*. DHCD will review each submitted action plan for consistency with these guidelines, including but not limited to the timelines in

Table 3. If DHCD determines that the MBTA community's action plan is reasonable and will lead to district compliance in a timely manner, DHCD will issue a determination of interim compliance. DHCD may require modifications to a proposed action plan prior to approval.

iii. *Implementation of the action plan*. After DHCD approves an action plan and issues a determination of interim compliance, an MBTA community must diligently implement the action plan. DHCD may revoke a determination of interim compliance if an MBTA community has not made sufficient progress in implementing an approved action plan. DHCD and EOHED will review an MBTA community's progress in implementing its action plan prior to making an award of funds under the Housing Choice Initiative and Massworks infrastructure program.

iv. *Deadlines for submitting action plans*. To achieve interim compliance for grants made through the 2023 One Stop Application, action plans must be submitted by no later than January 31, 2023. An MBTA community that does not submit an action plan by that date may not receive a DHCD determination of interim compliance in time to receive an award of funds from the listed funding sources in 2023. An MBTA community that does not achieve interim compliance in time for the 2023 One Stop Application may submit an action plan to become eligible for a subsequent round of the One Stop Application, provided that an action plan must be submitted by no later than January 31 of the year in which the MBTA community seeks to establish grant eligibility; and provided further that no action plan may be submitted or approved after the applicable district compliance application deadline set forth in Table 3.

b. *Assistance for communities implementing an action plan.*

MBTA communities are encouraged to communicate as needed with DHCD staff throughout the process of implementing an action plan. DHCD will endeavor to respond to inquiries about whether a proposed multi-family zoning district complies with Section 3A prior to a vote by the municipal legislative body to create or modify such a district. Such requests shall be made on a form to be provided by DHCD and should be submitted at least 90 days prior to the vote of the legislative body.

c. Requests for determination of district compliance

When an MBTA community believes it has a multi-family zoning district that complies with Section 3A, it may request a determination of district compliance from DHCD. Such a request may be made for a multi-family zoning district that was in existence on the date that Section 3A became law, or for a multi-family zoning district that was created or amended after the enactment of Section 3A. In either case, such request shall be made on an application form required by DHCD and shall include, at a minimum, the following information. Municipalities will need to submit:

(i) A certified copy of the municipal zoning ordinance or by-law and zoning map, including all provisions that relate to uses and structures in the multi-family zoning district.

(ii) An estimate of multi-family unit capacity using the compliance model.

(iii) GIS shapefile for the multi-family zoning district.
(iv) In the case of a by-law enacted by a town, evidence that the clerk has submitted a copy of the adopted multi-family zoning district to the office of the Attorney General for approval as required by state law, or evidence of the Attorney General's approval.

After receipt of a request for determination of district compliance, DHCD will notify the requesting MBTA community within 30 days if additional information is required to process the request. Upon reviewing a complete application, DHCD will provide the MBTA community a written determination either stating that the existing multi-family zoning district complies with Section 3A, or identifying the reasons why the multi-family zoning district fails to comply with Section 3A and the steps that must be taken to achieve compliance. An MBTA community that has achieved interim compliance prior to requesting a determination of district compliance shall remain in interim compliance for the period during which a request for determination of district compliance, with all required information, is pending at DHCD.

10. Ongoing Obligations; Rescission of a Determination of Compliance

After receiving a determination of compliance, an MBTA community must notify DHCD in writing of any zoning amendment or proposed zoning amendment that affects the compliant multi-family zoning district, or any other by-law, ordinance, rule or regulation that limits the development of multi-family housing in the multi-family zoning district. DHCD may rescind a determination of district compliance, or require changes to a multi-family zoning district to remain in compliance, if DHCD determines that:

(i) The MBTA community submitted inaccurate information in its application for a determination of compliance;
(ii) The MBTA community failed to notify DHCD of a zoning amendment that affects the multi-family zoning district;
(iii) The MBTA community enacts or amends any by-law or ordinance, or other rule or regulation, that materially alters the minimum land area and/or the multi-family unit capacity in the multi-family zoning district;
(iv) A board, authority or official in the MBTA community does not issue permits, or otherwise acts or fails to act, to allow construction of a multi-family housing project that is allowed as of right in the multi-family zoning district;
(v) The MBTA community takes other action that causes the multi-family zoning district to no longer comply with Section 3A; or
(vi) An MBTA community with an approved multi-family zoning district has changed transit category as a result of a newly opened or decommissioned transit station, or the establishment of permanent, regular service at a transit station where there was formerly intermittent or event-based service.

11. Changes to MBTA Service

Section 3A applies to the 175 MBTA communities identified in section 1A of the Zoning Act and section 1 of chapter 161A of the General Laws. When MBTA service changes, the list of MBTA communities and/or the transit category assignments of those MBTA communities in Appendix 1 may change as well.

The transit category assignments identified in Appendix 1 of these guidelines reflect certain MBTA service changes that will result from new infrastructure now under construction in connection with the South Coast Rail and Green Line Extension projects. These service changes include the opening of new Green Line stations and commuter rail stations, as well as the elimination of regular commuter rail service at the Lakeville station. These changes are scheduled to take effect in all cases a year or more before any municipal district compliance deadline. Affected MBTA communities are noted in Appendix 1.

Municipalities that are not now identified as MBTA communities and may be identified as such in the future are not addressed in these guidelines or included in Appendix 1. New MBTA communities will be addressed with revisions to Appendix 1, and separate compliance timelines, in the future.

Future changes to Silver Line routes or stations may change district location requirements when expanded high-capacity service combined with new facilities creates a bus station where there was not one before. Changes to other bus routes, including the addition or elimination of bus stops or reductions or expansions of bus service levels, do not affect the transit categories assigned to MBTA communities and will not affect location requirements for multi-family zoning districts. Any future changes to MBTA transit service, transit routes and transit service levels are determined by the MBTA Board of Directors consistent with the MBTA's Service Delivery Policy.

List of Appendices:

Appendix 1: MBTA Community Categories and Requirements

Appendix 2: Compliance Methodology/Model

Appendix 1:

MBTA Community Categories and Requirements

Community	Community category	2020 Housing Units	Minimum multi-family unit capacity*	Minimum land area**	Developable station area***	% of district to be located in station area
Abington	Commuter Rail	6,811	1,022	50	307	40%
Acton	Commuter Rail	9,219	1,383	50	246	20%
Amesbury	Adjacent Community	7,889	789	50	-	0%
Andover	Commuter Rail	13,541	2,031	50	587	50%
Arlington	Adjacent Community	20,461	2,046	32	58	0%
Ashburnham	Adjacent Small Town	2,730	137	-	-	0%
Ashby	Adjacent Small Town	1,243	62	-	-	0%
Ashland	Commuter Rail	7,495	1,124	50	272	40%
Attleboro	Commuter Rail	19,097	2,865	50	467	50%
Auburn	Adjacent Community	6,999	750	50	-	0%
Ayer	Commuter Rail	3,807	750	50	284	40%
Bedford	Adjacent Community	5,444	750	50	-	0%
Bellingham	Adjacent Community	6,749	750	50	-	0%
Belmont	Commuter Rail	10,882	1,632	27	502	50%
Berkley	Adjacent Small Town	2,360	118	-	79	0%
Beverly	Commuter Rail	17,887	2,683	50	1,435	90%
Billerica	Commuter Rail	15,485	2,323	50	308	40%
Bourne	Adjacent Small Town	11,140	557	-	-	0%
Boxborough	Adjacent Small Town	2,362	118	-	-	0%
Boxford	Adjacent Small Town	2,818	141	-	-	0%
Braintree	Rapid Transit	15,077	3,769	50	485	50%
Bridgewater	Commuter Rail	9,342	1,401	50	181	20%
Brockton	Commuter Rail	37,304	5,596	50	995	90%
Brookline	Rapid Transit	27,961	6,990	41	1,349	90%

Community	Community category	2020 Housing Units	Minimum multi-family unit capacity*	Minimum land area**	Developable station area***	% of district to be located in station area
Burlington	Adjacent Community	10,431	1,043	50	-	0%
Cambridge	Rapid Transit	53,907	13,477	32	1,392	90%
Canton	Commuter Rail	9,930	1,490	50	451	50%
Carlisle	Adjacent Small Town	1,897	95	-	-	0%
Carver	Adjacent Small Town	4,701	235	-	-	0%
Chelmsford	Adjacent Community	14,769	1,477	50	-	0%
Chelsea	Rapid Transit	14,554	3,639	14	608	75%
Cohasset	Commuter Rail	3,341	638	43	241	20%
Concord	Commuter Rail	7,295	1,094	50	519	50%
Danvers	Adjacent Community	11,763	1,176	50	-	0%
Dedham	Commuter Rail	10,459	1,569	49	507	50%
Dover	Adjacent Small Town	2,046	102	-	-	0%
Dracut	Adjacent Community	12,325	1,233	50	-	0%
Duxbury	Adjacent Community	6,274	750	50	-	0%
East Bridgewater	Adjacent Community	5,211	750	50	-	0%
Easton	Adjacent Community	9,132	913	50	-	0%
Essex	Adjacent Small Town	1,662	83	-	-	0%
Everett	Rapid Transit	18,208	4,552	22	200	20%
Fitchburg	Commuter Rail	17,452	2,618	50	601	75%
Foxborough	Adjacent Community	7,682	768	50	-	0%
Framingham	Commuter Rail	29,033	4,355	50	270	40%
Franklin	Commuter Rail	12,551	1,883	50	643	75%
Freetown	Commuter Rail	3,485	750	50	346	40%
Georgetown	Adjacent Community	3,159	750	50	-	0%
Gloucester	Commuter Rail	15,133	2,270	50	430	50%
Grafton	Adjacent Community	7,760	776	50	82	0%
Groton	Adjacent Small Town	4,153	208	-	-	0%

Community	Community category	2020 Housing Units	Minimum multi-family unit capacity*	Minimum land area**	Developable station area***	% of district to be located in station area
Groveland	Adjacent Small Town	2,596	130	-	-	0%
Halifax	Commuter Rail	3,107	750	50	300	40%
Hamilton	Commuter Rail	2,925	731	49	184	20%
Hanover	Adjacent Community	5,268	750	50	-	0%
Hanson	Commuter Rail	3,960	750	50	218	20%
Harvard	Adjacent Small Town	2,251	113	-	-	0%
Haverhill	Commuter Rail	27,927	4,189	50	415	50%
Hingham	Commuter Rail	9,930	1,490	50	757	75%
Holbrook	Commuter Rail	4,414	662	41	170	20%
Holden	Adjacent Community	7,439	750	50	-	0%
Holliston	Adjacent Community	5,562	750	50	-	0%
Hopkinton	Adjacent Community	6,645	750	50	79	0%
Hull	Adjacent Community	5,856	586	7	34	0%
Ipswich	Commuter Rail	6,476	971	50	327	40%
Kingston	Commuter Rail	5,364	805	50	345	40%
Lakeville	Adjacent Small Town	4,624	231	-	30	0%
Lancaster	Adjacent Small Town	2,788	139	-	-	0%
Lawrence	Commuter Rail	30,008	4,501	39	271	40%
Leicester	Adjacent Small Town	4,371	219	-	-	0%
Leominster	Commuter Rail	18,732	2,810	50	340	40%
Lexington	Adjacent Community	12,310	1,231	50	-	0%
Lincoln	Commuter Rail	2,771	635	42	130	20%
Littleton	Commuter Rail	3,889	750	50	244	20%
Lowell	Commuter Rail	43,482	6,522	50	274	40%
Lunenburg	Adjacent Small Town	4,805	240	-	-	0%
Lynn	Commuter Rail	36,782	5,517	50	637	75%
Lynnfield	Adjacent Community	4,773	607	40	-	0%

Community	Community category	2020 Housing Units	Minimum multi-family unit capacity*	Minimum land area**	Developable station area***	% of district to be located in station area
Malden	Rapid Transit	27,721	6,930	31	484	50%
Manchester	Commuter Rail	2,433	559	37	305	40%
Mansfield	Commuter Rail	9,282	1,392	50	327	40%
Marblehead	Adjacent Community	8,965	897	27	-	0%
Marlborough	Adjacent Community	17,547	1,755	50	-	0%
Marshfield	Adjacent Community	11,575	1,158	50	-	0%
Maynard	Adjacent Community	4,741	474	21	-	0%
Medfield	Adjacent Community	4,450	750	50	-	0%
Medford	Rapid Transit	25,770	6,443	35	714	75%
Medway	Adjacent Community	4,826	750	50	-	0%
Melrose	Commuter Rail	12,614	1,892	25	774	75%
Merrimac	Adjacent Small Town	2,761	138	-	-	0%
Methuen	Adjacent Community	20,194	2,019	50	-	0%
Middleborough	Commuter Rail	9,808	1,471	50	260	40%
Middleton	Adjacent Community	3,359	750	50	-	0%
Millbury	Adjacent Community	5,987	750	50	-	0%
Millis	Adjacent Community	3,412	750	50	-	0%
Milton	Rapid Transit	9,844	2,461	50	404	50%
Nahant	Adjacent Small Town	1,680	84	-	-	0%
Natick	Commuter Rail	15,680	2,352	50	680	75%
Needham	Commuter Rail	11,891	1,784	50	1,223	90%
Newbury	Adjacent Small Town	3,072	154	-	69	0%
Newburyport	Commuter Rail	8,615	1,292	35	213	20%
Newton	Rapid Transit	33,320	8,330	50	2,833	90%
Norfolk	Commuter Rail	3,601	750	50	333	40%
North Andover	Adjacent Community	11,914	1,191	50	5	0%
North Attleborough	Adjacent Community	12,551	1,255	50	-	0%

Community	Community category	2020 Housing Units	Minimum multi-family unit capacity*	Minimum land area**	Developable station area***	% of district to be located in station area
North Reading	Adjacent Community	5,875	750	50	-	0%
Northborough	Adjacent Community	5,897	750	50	-	0%
Northbridge	Adjacent Community	6,691	750	50	-	0%
Norton	Adjacent Community	6,971	750	50	-	0%
Norwell	Adjacent Community	3,805	750	50	-	0%
Norwood	Commuter Rail	13,634	2,045	50	861	90%
Paxton	Adjacent Small Town	1,689	84	-	-	0%
Peabody	Adjacent Community	23,191	2,319	50	-	0%
Pembroke	Adjacent Community	7,007	750	50	-	0%
Plymouth	Adjacent Community	28,074	2,807	50	-	0%
Plympton	Adjacent Small Town	1,068	53	-	-	0%
Princeton	Adjacent Small Town	1,383	69	-	-	0%
Quincy	Rapid Transit	47,009	11,752	50	1,222	90%
Randolph	Commuter Rail	12,901	1,935	48	182	20%
Raynham	Adjacent Community	5,749	750	50	-	0%
Reading	Commuter Rail	9,952	1,493	43	343	40%
Rehoboth	Adjacent Small Town	4,611	231	-	-	0%
Revere	Rapid Transit	24,539	6,135	27	457	50%
Rochester	Adjacent Small Town	2,105	105	-	-	0%
Rockland	Adjacent Community	7,263	726	47	-	0%
Rockport	Commuter Rail	4,380	657	32	252	40%
Rowley	Commuter Rail	2,405	601	40	149	20%
Salem	Commuter Rail	20,349	3,052	41	266	40%
Salisbury	Adjacent Community	5,305	750	50	-	0%
Saugus	Adjacent Community	11,303	1,130	50	11	0%
Scituate	Commuter Rail	8,260	1,239	50	373	40%
Seekonk	Adjacent Community	6,057	750	50	-	0%

Community	Community category	2020 Housing Units	Minimum multi-family unit capacity*	Minimum land area**	Developable station area***	% of district to be located in station area
Sharon	Commuter Rail	6,581	987	50	261	40%
Sherborn	Adjacent Small Town	1,562	78	-	-	0%
Shirley	Commuter Rail	2,599	650	43	338	40%
Shrewsbury	Adjacent Community	14,966	1,497	50	52	0%
Somerville	Rapid Transit	36,269	9,067	24	1,314	90%
Southborough	Commuter Rail	3,763	750	50	167	20%
Sterling	Adjacent Small Town	3,117	156	-	-	0%
Stoneham	Adjacent Community	10,159	1,016	27	12	0%
Stoughton	Commuter Rail	11,739	1,761	50	317	40%
Stow	Adjacent Small Town	2,770	139	-	-	0%
Sudbury	Adjacent Community	6,556	750	50	-	0%
Sutton	Adjacent Small Town	3,612	181	-	-	0%
Swampscott	Commuter Rail	6,362	954	20	236	20%
Taunton	Commuter Rail	24,965	3,745	50	269	40%
Tewksbury	Adjacent Community	12,139	1,214	50	-	0%
Topsfield	Adjacent Small Town	2,358	118	-	-	0%
Townsend	Adjacent Small Town	3,566	178	-	-	0%
Tyngsborough	Adjacent Community	4,669	750	50	-	0%
Upton	Adjacent Small Town	2,995	150	-	-	0%
Wakefield	Commuter Rail	11,305	1,696	36	630	75%
Walpole	Commuter Rail	10,042	1,506	50	638	75%
Waltham	Commuter Rail	26,545	3,982	50	470	50%
Wareham	Adjacent Community	12,967	1,297	50	-	0%
Watertown	Adjacent Community	17,010	1,701	24	27	0%
Wayland	Adjacent Community	5,296	750	50	-	0%
Wellesley	Commuter Rail	9,282	1,392	50	921	90%
Wenham	Commuter Rail	1,460	365	24	111	20%

Community	Community category	2020 Housing Units	Minimum multi-family unit capacity*	Minimum land area**	Developable station area***	% of district to be located in station area
West Boylston	Adjacent Community	3,052	587	39	-	0%
West Bridgewater	Adjacent Small Town	2,898	145	-	-	0%
West Newbury	Adjacent Small Town	1,740	87	-	-	0%
Westborough	Commuter Rail	8,334	1,250	50	194	20%
Westford	Adjacent Community	9,237	924	50	-	0%
Westminster	Adjacent Small Town	3,301	165	-	30	0%
Weston	Commuter Rail	4,043	750	50	702	75%
Westwood	Commuter Rail	5,801	870	50	470	50%
Weymouth	Commuter Rail	25,419	3,813	50	713	75%
Whitman	Commuter Rail	5,984	898	37	242	20%
Wilmington	Commuter Rail	8,320	1,248	50	538	50%
Winchester	Commuter Rail	8,135	1,220	37	446	50%
Winthrop	Adjacent Community	8,821	882	12	14	0%
Woburn	Commuter Rail	17,540	2,631	50	702	75%
Worcester	Commuter Rail	84,281	12,642	50	290	40%
Wrentham	Adjacent Community	4,620	750	50	-	0%

* Minimum multi-family unit capacity for most communities will be based on the 2020 housing stock and the applicable percentage for that municipality's community type. In some cases, the minimum unit capacity is derived from an extrapolation of the required minimum land area multiplied by the statutory minimum gross density of 15 dwelling units per acre. In cases where the required unit capacity from these two methods would exceed 25% of the community's housing stock, the required unit capacity has instead been capped at that 25% level.

** Minimum land area is 50 acres for all communities in the rapid transit, commuter rail and adjacent community types. There is no minimum land area requirement for adjacent small towns. Where 50 acres exceeds 1.5% of the developable land area in a town, a cap has been instituted that sets minimum land area to 1.5% of developable land area in the town.

*** Developable station area is derived by taking the area of a half-mile circle around an MBTA commuter rail station, rapid transit station, or ferry terminal and removing any areas comprised of excluded land.

Appendix 2

Compliance Model Overview

The purpose of the compliance model is to ensure a consistent approach to measuring and evaluating multi-family zoning districts for compliance with Section 3A. The compliance model is intended to create a reasonable estimate of multi-family unit capacity of each multi-family zoning district. It is not intended to provide a precise determination of how many units may be developed on any individual lot or combination of lots.

The model uses geospatial tax parcel data from local assessors, compiled and hosted by MassGIS, to define lot boundaries and dimensions in each multi-family zoning district. The model also captures key dimensional and regulatory elements of the multi-family zoning district that impact multi-family unit capacity. The product of the compliance model is a Microsoft Excel workbook that must be submitted as part of a compliance application to DHCD. Consultant support is available at no cost to assist MBTA communities in meeting all the technical requirements of compliance.

The Compliance Modeling Process at a Glance:

1. **Step One**
   Download the compliance model (an Excel workbook), instructions, and Land Database GIS file from DHCD's mass.gov website

2. **Step Two**
   Each municipality will answer questions in a "Checklist" format answering questions and using information from the proposed zoning district (such as height, lot coverage, and other dimensional metrics).

3. **Step Three**
   Using a GIS map provided by DHCD, the community will draw zoning district boundaries so that individual lot level data can be exported into the workbook.

4. **Step Four**
   The compliance model's formulas then generate an estimate of: unit capacity on each lot in the district(s); unit capacity for the district(s) as a whole; total land area for the district(s) and resulting gross density. Municipalities then review the resulting lot data for accuracy.

5. **Step Five**
   Finally, the workbook results are compared to the requirements for the applying municipality as part of the district compliance determination process. The municipality submits the completed workbook as part of its application to DHCD when the results show a district and zoning is compliant with the requirements in Appendix 1.

Components of the Compliance Model

Land database

The compliance model includes geospatial parcel data for each MBTA community that identifies how much land area on each lot within a multi-family zoning district is developable land. Applicants will prepare this parcel data for the model's calculations by creating a shapefile for each district, measuring each district's land area, and exporting all lot records within the district's boundaries into an Excel or .csv file. These exported tables can then be pasted into the zoning review checklist and unit capacity estimator, described below.

Zoning review checklist and unit capacity estimator

To capture the data needed to estimate a district's multi-family unit capacity, municipalities will be required to complete a zoning review checklist. The checklist is of a series of questions and responses about allowed residential uses, parking requirements, dimensional restrictions (such as maximum building height and minimum open space), and other regulatory elements applicable in the district.

The unit capacity estimator uses the GIS exported lot information from the land database and the information entered into the zoning review checklist to calculate an estimate of the maximum number of multi-family residential units that could be constructed on each lot in each district as of right. It then aggregates the unit capacity estimates for each lot into an estimate of total unit capacity for each district. It also derives an estimate of the gross density for each district.

Case-Specific Refinements to the Compliance Model Inputs and Outputs

To ensure the integrity and reasonableness of each unit capacity estimate, DHCD may adjust the compliance model inputs and outputs as necessary to account for physical conditions or zoning restrictions not adequately captured by the compliance model. For example, DHCD may override the GIS data and change one or more lots from excluded land to developable land where a municipality demonstrates those lots meet the definition of developable land. DHCD may also adjust the unit capacity estimator's algorithm when it does not adequately account for an atypical zoning requirement or other local development restriction that will clearly impact unit capacity.

AGENDA ITEM SUMMARY

LEXINGTON PLANNING BOARD

AGENDA ITEM TITLE:

Board Member Updates

PRESENTER:

ITEM NUMBER:

SUMMARY:

SUGGESTED MOTION:

FOLLOW-UP:

DATE AND APPROXIMATE TIME ON AGENDA:

8/17/2022

AGENDA ITEM SUMMARY

LEXINGTON PLANNING BOARD

AGENDA ITEM TITLE:

Upcoming Meetings

PRESENTER:

ITEM NUMBER:

SUMMARY:

SUGGESTED MOTION:

FOLLOW-UP:

DATE AND APPROXIMATE TIME ON AGENDA:

8/17/2022

AGENDA ITEM SUMMARY

LEXINGTON PLANNING BOARD

AGENDA ITEM TITLE:

Review of Meeting Minutes (August 3, 2022 tentative)

PRESENTER:

ITEM NUMBER:

SUMMARY:

SUGGESTED MOTION:

FOLLOW-UP:

DATE AND APPROXIMATE TIME ON AGENDA:

8/17/2022