LINC COLE LANE
(69 PLEASANT STREET-ASSESSORS MAP 14 LOT 57)
SITE SENSITIVE DEVELOPMENT DEFINITIVE PLAN SET

LOCATED IN LEXINGTON, MA
MARCH 30, 2022
REVISED MAY 23, 2022; JULY 21, 2022; AUGUST 1, 2022, AUGUST 24,2022

(IN ACCORDANCE WITH SECTION 135-6.9-3 OF THE LEXINGTON ZONING BYLAW)

NOTES:

1. THE INFORMATION DEPICTED ON THIS PLAN HAS BEEN COMPILED FROM THE TOWN OF LEXINGTON GIS SYSTEM
2. LAND USE WITHIN 500 FEET OF THE SUBJECT PROPERTY IS PRIMARILY SINGLE FAMILY DWELLINGS WITH THE EXCEPTIONS OF BOWMAN PARK, MOON HILL POOL AND WILSON FARM

ABUTTERS

MAP-LOT	ADDRESS	OWNER NAME
14-87	MOON HILL RD	SIX MOON HILL INC
14-82	MOON HILL RD	SIX MOON HILL INC
8-31B	PLEASANT ST	TOWN OF LEXINGTON
14-83	10 MOON HILL RD	CHAUDHRY RAJIVE &
8-161	10 WHITE PINE LN	VAN DUINEN NIELS &
14-59C	10 LUONGO FARM LN	LUONGO EUGENE R &
14-94	11 MOON HILL RD	WARREN PETER G &
8-73	10 WATERTOWN ST	CHARLANTINI ROBERT &
14-59D	12 LUONGO FARM LN	RAMNATHAN VIJAY & VINITHA C
8-75	14 WATERTOWN ST	ANDRONACO FRANK J &
8-164	12 WHITE PINE LN	PARISH OF THE CHURCH OF OUR REDEEMER
8-74	12 WATERTOWN ST	DEVINENI RAGHU RAM &
14-84	12 MOON HILL RD	HAMILTON GEORGE C &
8-163B	13 WHITE PINE LN	PETERSON SARA BETH
8-165	14 WHITE PINE LN	LIAO ELIZABETH &
14-93	15 MOON HILL RD	TING SAMUEL CC & TING SUSAN C M TRUSTEES
14-91	21 MOON HILL RD	KEAVENY RICHARD I &
8-70	2 WATERTOWN ST	FINLAY JAMES R &
14-86A	16 MOON HILL RD	BHOWMIK NEELANJANA &
14-92	17 MOON HILL RD	BLUMENTHAL STEVEN &
14-149	23 MASON ST	SCARBROUGH WILL &
14-136	22 MASON ST	HEUCHLING DONNA A
14-88	24 MOON HILL RD	SIX MOON HILL INC
14-135	24 MASON ST	GUTH GIORA &
8-24	32 MOON HILL RD	BERKOWITZ LAWRENCE & COHN ELLEN TRUSTEES
14-146	29 MASON ST	FRANKEL JAMES LOWELL
14-134B	26 MASON ST	MENZIN,TR, JOSEPH H
8-23	28 MOON HILL RD	WHITNEY PATRICIO ALEXANDER &
8-68B	30 WATERTOWN ST	LONG TERM CENTERS OF LEXINGTON INC
14-89A	29 MOON HILL RD	SLACK JOSIAH & MELTAUS MARY A
14-133B	28 MASON ST	HACOBIAN AREMIN
14-148	25 MASON ST	WEAVER ANDREW T &
14-147	27 MASON ST	MORENO ENRIQUE &
14-52A	48 PLEASANT ST	GREKAS ELIZABETH &
14-60C	5 LUONGO FARM LN	BABCOCK HAZEN P &
14-131	5 WHITE PINE LN	EINSTEIN EILEEN B TRUSTEE
8-159	6 WHITE PINE LN	GILLESPIE KATHLEEN M
14-59A	6 LUONGO FARM LN	CHENG JOANNE T
8-22	81 PLEASANT ST	REYNOLDS SARAH ELIZABETH &
14-151	57 PLEASANT ST	MAJID, TR ATIF & ALI, TR HIFZA
8-72	6 WATERTOWN ST	YILDIZYAN ALEKSAN & JANELLE
14-51	50 PLEASANT ST	RAJARAMAN GANESH & PATEL VIHA TRUSTEES
8-69	66 PLEASANT ST	ASSORTATO FRANK P & ASSORTATO CATHERINE
14-56C	64 PLEASANT ST	WARREN WAYNE DOUGLAS & WARREN AUDREY
14-56B	60 PLEASANT ST	GOUDREAU PAUL JOSEPH TRS/PAUL JOSEPH GOU
14-132A	7 WHITE PINE LN	LINDSLEY JOY
14-100	4 BIRD HILL RD	MATTSON PHILIP ARNOLD TRS/PHILIP ARNOLD
8-71	4 WATERTOWN ST	CHERIAN SIJO P &
14-53	52 PLEASANT ST	PATTERSON ROBERT D &
14-60B	7 LUONGO FARM LN	BRAY WILLIAM J &
14-59B	8 LUONGO FARM LN	CHAUVIN ROBERT F & CHAUVIN DEBRA J TRS
8-21A	83 PLEASANT ST	GRUBER JONATHAN &
14-49A	8 PLEASANT ST	WILSON FARM INC
8-160	8 WHITE PINE LN	SACKTON JOHN T &
8-31A	82 PLEASANT ST	HUANG ALBERT C K & HUANG YUNG SHEN TRS
8-21C	85 PLEASANT ST	ANDRYAUSKAS FRANK W &
14-60A	9 LUONGO FARM LN	HOOLI BASAVARAJ
8-21D	85A PLEASANT ST	SILVERA ISAAC F & LILI J TRUSTEES
8-20	87 PLEASANT ST	SILVERA ISAAC F & SILVERA LILI J TRUSTEE
8-162A	9 WHITE PINE LN	AMORRORTU PEDRO ALVARO &
8-32	94 PLEASANT ST	CARPENTER ALDEN B & CARPENTER
8-67	WATERTOWN ST	TOWN OF LEXINGTON
15-3A	31 MOON HILL RD	FEE MICHALE &
8-163C	11 WHITE PINE LN	DAGGETT MATTHEW P &
14-152	55 PLEASANT ST	KALUS - BYSTRICKY IVA C &
14-85A	14 MOON HILL RD	YALE PHYLLIS R & TAFT TUCKER S
14-90	25 MOON HILL RD	SEGAL MARTHA FOX & GRAY ROLAND III TRS

LEXINGTON PLANNING BOARD

_____

_____

_____

_____

_____

_____

_____

_____

DATE:

I, _____ CLERK OF THE TOWN OF LEXINGTON, MASSACHUSETTS HEREBY CERTIFY THAT THE NOTICE OF APPROVAL OF THIS PLAN BY THE LEXINGTON PLANNING BOARD HAS BEEN RECEIVED AND RECORDED AT THE OFFICE AND NO NOTICE OF APPEAL WAS RECEIVED DURING TWENTY DAYS NEXT AFTER SUCH RECEIPT AND RECORDED OF SAID NOTICE.

_____ TOWN CLERK

_____ DATE

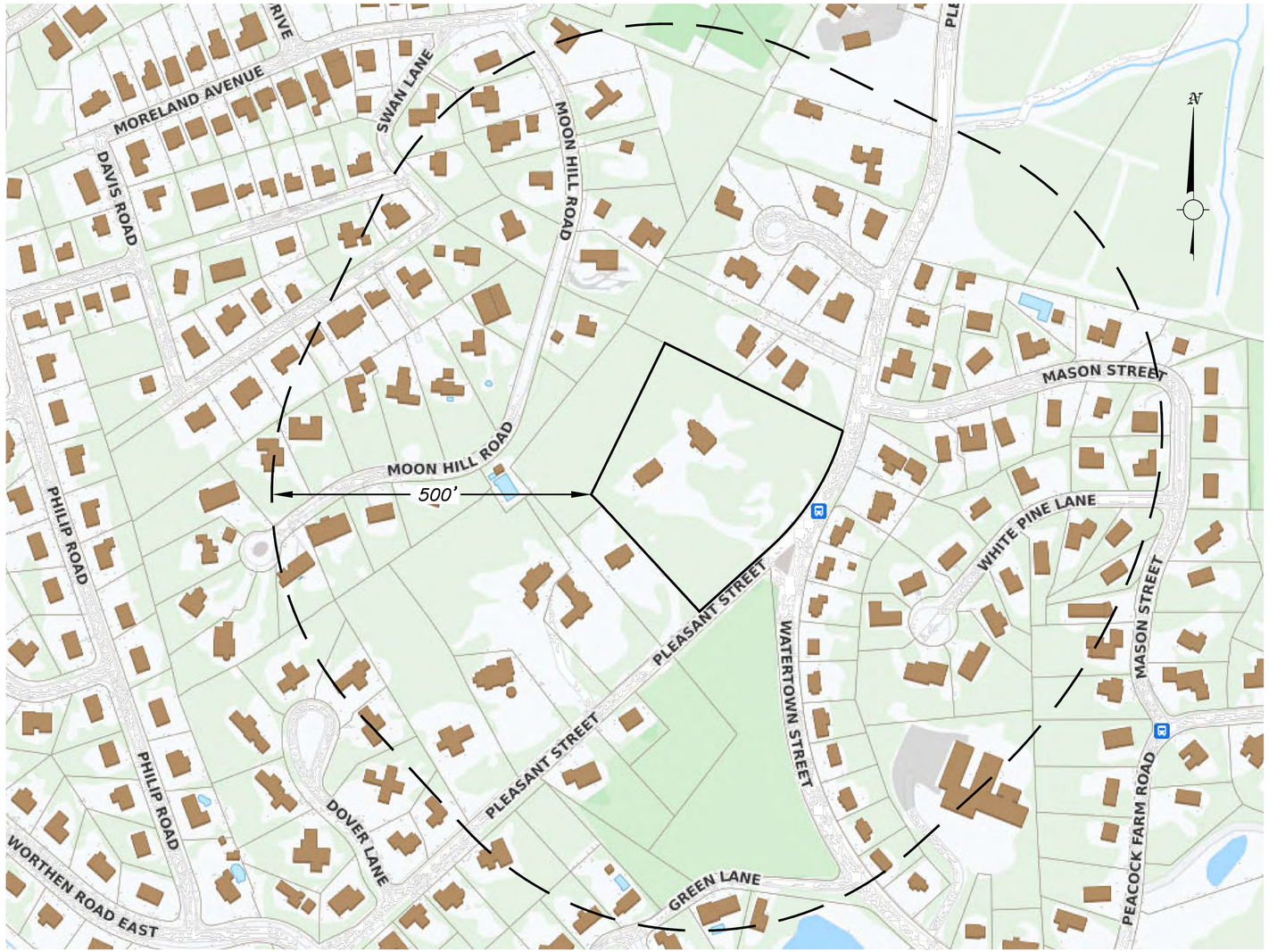

LOCUS CONTEXT MAP
(SCALE 1"=100')

RECORD OWNER:
STORER LEXINGTON LLC
16 CHESTERFORD ROAD
WINCHESTER, MA 01890

- DEED BOOK 72722 PAGE 50

APPLICANT:
SHELDON CORPORATION
121 MARRETT ROAD
LEXINGTON, MA 02420

PREPARED BY:
PATRIOT Engineering
35 BEDFORD STREET, SUITE 4
LEXINGTON, MASSACHUSETTS 02420
T: (978) 726-2654
www.patriot-eng.com

COMMONWEALTH OF MASSACHUSETTS
MICHAEL J. NOVAK
CIVIL
No. 50696
REGISTERED PROFESSIONAL ENGINEER

J THOMA LAND DESIGN STUDIOS
141 HAGGETTS POND ROAD
ANDOVER, MA 01810

MASSACHUSETTS
JEFFREY A. THOMA
No. 1377
REGISTERED LANDSCAPE ARCHITECT

SHEET INDEX

EXISTING CONDITIONS PLAN
IN
LEXINGTON, MASS.
(MIDDLESEX COUNTY)

SCALE: 1 IN. = 30 FT. MARCH 21, 2022

KEENAN SURVEY
8 WINCHESTER PLACE
WINCHESTER, MASS.
781-729-4213

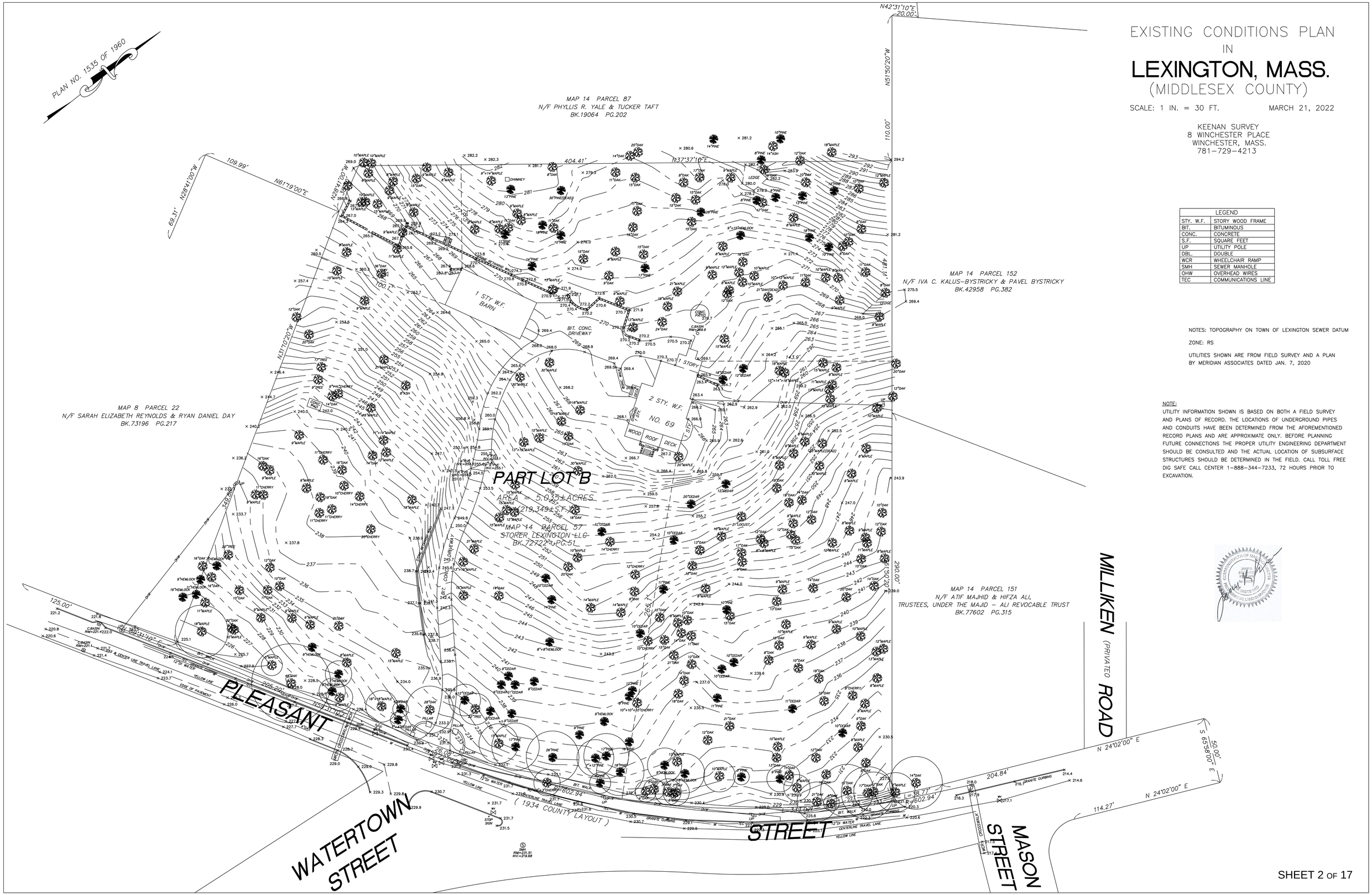

LEGEND	
STY. W.F.	STORY WOOD FRAME
BIT.	BITUMINOUS
CONC.	CONCRETE
S.F.	SQUARE FEET
UP	UTILITY POLE
DBL.	DOUBLE
WCR	WHEELCHAIR RAMP
SMH	SEWER MANHOLE
OHW	OVERHEAD WIRES
TEC	COMMUNICATIONS LINE

NOTES: TOPOGRAPHY ON TOWN OF LEXINGTON SEWER DATUM

ZONE: RS

UTILITIES SHOWN ARE FROM FIELD SURVEY AND A PLAN BY MERIDIAN ASSOCIATES DATED JAN. 7, 2020

NOTE:
UTILITY INFORMATION SHOWN IS BASED ON BOTH A FIELD SURVEY AND PLANS OF RECORD. THE LOCATIONS OF UNDERGROUND PIPES AND CONDUITS HAVE BEEN DETERMINED FROM THE AFOREMENTIONED RECORD PLANS AND ARE APPROXIMATE ONLY. BEFORE PLANNING FUTURE CONNECTIONS THE PROPER UTILITY ENGINEERING DEPARTMENT SHOULD BE CONSULTED AND THE ACTUAL LOCATION OF SUBSURFACE STRUCTURES SHOULD BE DETERMINED IN THE FIELD. CALL TOLL FREE DIG SAFE CALL CENTER 1-888-344-7233, 72 HOURS PRIOR TO EXCAVATION.

TEST PIT DATA

TEST PIT DATA AND LOCATIONS OBTAINED FROM A PLAN ENTITLED RECORD CONDITIONS PLAN OF LAND PREPARED BY MERIDIAN ASSOCIATES DATED JANUARY 7, 2020

TEST PIT TP–1
ELEV.=237.2±
ASSUMED E.S.H.G.W. ELEV.=231.2

0"–12" A HORIZON: SANDY LOAM
12"–17" B HORIZON: LOAMY SAND
17"–24" LAYER C_1: LOAMY SAND
24"–36" LAYER C_2: GRAVELLY LOAMY SAND
36"–46" LAYER C_3: FINE SAND
46"–72" LAYER C_4: GRAVELLY LOAMY SAND
72"+ REFUSAL

NO REDOX OBSERVED
NO WEEPING OBSERVED

TEST PIT TP–2
ELEV.=265.0±
ASSUMED E.S.H.G.W. ELEV.=262.3

0"–8" A HORIZON: SANDY LOAM
8"–14" B HORIZON: GRAVELLY SANDY LOAM WITH COBBLES
14"–32" LAYER C: GRAVELLY SANDY LOAM WITH COBBLES
32"+ REFUSAL

NO REDOX OBSERVED
NO WEEPING OBSERVED

TEST PIT TP–2
ELEV.=265.0±
ASSUMED E.S.H.G.W. ELEV.=262.3

0"–8" A HORIZON: SANDY LOAM
8"–14" B HORIZON: GRAVELLY SANDY LOAM WITH COBBLES
14"–32" LAYER C: GRAVELLY SANDY LOAM WITH COBBLES
32"+ REFUSAL

NO REDOX OBSERVED
NO WEEPING OBSERVED

TEST PIT TP–3
ELEV.=274.3±
ASSUMED E.S.H.G.W. ELEV.=269.6

0"–10" A HORIZON: SANDY LOAM
10"–14" B HORIZON: SANDY LOAM WITH COBBLES AND BOULDERS
14"–31" LAYER C_1: GRAVELLY LOAMY SAND WITH COBBLES
31"–56" LAYER C_2: GRAVELLY LOAMY SAND
56"+ REFUSAL

NO REDOX OBSERVED
NO WEEPING OBSERVED

TEST PIT TP–4
ELEV.=254.9±
ASSUMED E.S.H.G.W. ELEV.=253.6

0"–8" A HORIZON: SANDY LOAM
8"–16" B HORIZON: SANDY LOAM
16"+ REFUSAL

NO REDOX OBSERVED
NO WEEPING OBSERVED

TEST PIT TP–5
ELEV.=249.5±
ASSUMED E.S.H.G.W. ELEV.=243.2

0"–17" HTM
17"–28" A_B HORIZON: SANDY LOAM
28"–32" B HORIZON: SANDY LOAM
32"–40" LAYER C_1: GRAVELLY SANDY LOAM
40"–45" LAYER C_1/C_2: GRAVELLY LOAMY SAND WITH COBBLES
45"–76" LAYER C_2: GRAVELLY LOAMY SAND WITH COBBLES
76"+ REFUSAL

NO REDOX OBSERVED
NO WEEPING OBSERVED

TEST PIT TP–6
ELEV.=243.0±
ASSUMED E.S.H.G.W. ELEV.=239.2

0"–8" A HORIZON: SANDY LOAM
8"–12" B HORIZON: SANDY LOAM
12"–32" LAYER C_1: GRAVELLY SANDY LOAM WITH COBBLES
32"–46" LAYER C_2: GRAVELLY LOAMY SAND WITH COBBLES
46"+ REFUSAL

NO REDOX OBSERVED
NO WEEPING OBSERVED

TEST PIT TP–7
ELEV.=258.9±
ASSUMED E.S.H.G.W. ELEV.=255.9

0"–10" A HORIZON: SANDY LOAM
10"–14" B HORIZON: SANDY LOAM
14"–36" LAYER C: SANDY LOAM
36"+ REFUSAL

NO REDOX OBSERVED
NO WEEPING OBSERVED

NOTES:

1. THE TOPOGRAPHY, SITE DETAIL & SURFACE IMPROVEMENTS DEPICTED HEREON WERE OBTAINED FROM A PLAN PREPARED BY KEENAN SURVEY.
2. THE SOLE PURPOSE OF THIS PLAN SET IS TO COMPLY WITH SECTION 135-6.9.3 OF THE TOWN OF LEXINGTON ZONING BYLAW.
3. THE SUBJECT PROPERTY DEPICTED IS LOCATED WITHIN THE RS ZONING DISTRICT.
4. THE SUBJECT PROPERTY IS DEPICTED AS LOT 57 ON THE TOWN OF LEXINGTON ASSESSOR'S MAP 14
5. THE LOCATION OF ALL UNDERGROUND UTILITIES SHOWN ARE APPROXIMATE AND ARE BASED UPON A PARTIAL FIELD SURVEY AND PLANS OF RECORD. THIS PLAN DOES NOT GUARANTEE THE LOCATION OF UTILITIES DEPICTED. THE CONTRACTOR, PRIOR TO COMMENCEMENT OF CONSTRUCTION, SHALL VERIFY THE LOCATION OF ALL UTILITIES AND CONTACT DIG SAFE AT 1-888-344-7233.
6. THIS PLAN DOES NOT SHOW ANY UNRECORDED OR UNWRITTEN EASEMENTS WHICH MAY EXIST.

SOILS INFORMATION

SOILS INFORMATION DERIVED FROM THE USDA NATURAL RESOURCES CONSERVATION SERVICE SOIL SURVEY OF MIDDLESEX COUNTY, MASSACHUSETTS, URL: http: //websoilsurvey.nrcs.usda.gov.

SOIL TYPE	HYDROLOGIC SOIL GROUP	TYPICAL DEPTH TO ESHGW
104D HOLLIS-ROCK OUTCROP-CHARLTON COMPLEX, 15 TO 25 PERCENT SLOPES	GROUP D	MORE THAN 80"
302D MONTAUK FINE SANDY LOAM, 15 TO 35 PERCENT SLOPES, EXTREMELY STONY	GROUP C	18"-37"
422B CANTON FINE SANDY LOAM, 0 TO 8 PERCENT SLOPES, EXTREMELY STONY	GROUP B	MORE THAN 80"

LEGEND:

631C	SOIL TYPE
L.P	LOW POINT
H.P	HIGH POINT
	15-25% SLOPES
	25-40% SLOPES
	>40% SLOPES
ESHGW	ESTIMATED SEASONAL HIGH GROUNDWATER
TP–1	TEST PIT
	FLOW DIRECTION

LEXINGTON PLANNING BOARD

DATE:

I, _____ CLERK OF THE TOWN OF LEXINGTON, MASSACHUSETTS HEREBY CERTIFY THAT THE NOTICE OF APPROVAL OF THIS PLAN BY THE LEXINGTON PLANNING BOARD HAS BEEN RECEIVED AND RECORDED AT THE OFFICE AND NO NOTICE OF APPEAL WAS RECEIVED DURING TWENTY DAYS NEXT AFTER SUCH RECEIPT AND RECORDED OF SAID NOTICE.

TOWN CLERK DATE

RECORD OWNER:
STORER LEXINGTON LLC
16 CHESTERFORD ROAD
WINCHESTER, MA 01890

- DEED BOOK 72722 PAGE 50

APPLICANT:
SHELDON CORPORATION
121 MARRETT ROAD
LEXINGTON, MA 02420

ALL UNDERGROUND UTILITY DATA REPRESENTS RECORD INFORMATION WITHOUT SUBSURFACE VERIFICATION

LINC COLE LANE
69 PLEASANT STREET
LEXINGTON, MA

DRAWN BY:
DATE: 3-30-2022
CHECKED BY:
PROJECT No: 21-12

REVISIONS

DATE	BY	DESCRIPTION
5-23-2022		NO REVISIONS TO THIS SHEET
7-21-2022		NO REVISIONS TO THIS SHEET
8-1-2022		NO REVISIONS TO THIS SHEET

PATRIOT Engineering
35 BEDFORD STREET, SUITE 4
LEXINGTON, MASSACHUSETTS 02420
T: (978) 726-2654
www.patriot-eng.com

SITE ANALYSIS MAP
LOCATED IN
LEXINGTON, MA
(MIDDLESEX COUNTY)
PREPARED FOR
SHELDON CORP.

I DECLARE TO THE BEST OF MY PROFESSIONAL KNOWLEDGE, INFORMATION, AND BELIEF, THAT THIS PLAN WAS PREPARED IN ACCORDANCE WITH THE RULES AND REGULATIONS OF THE REGISTERS OF DEEDS.

FOR KEENAN SURVEY — DATE

FOR REGISTRY OF DEEDS USE ONLY

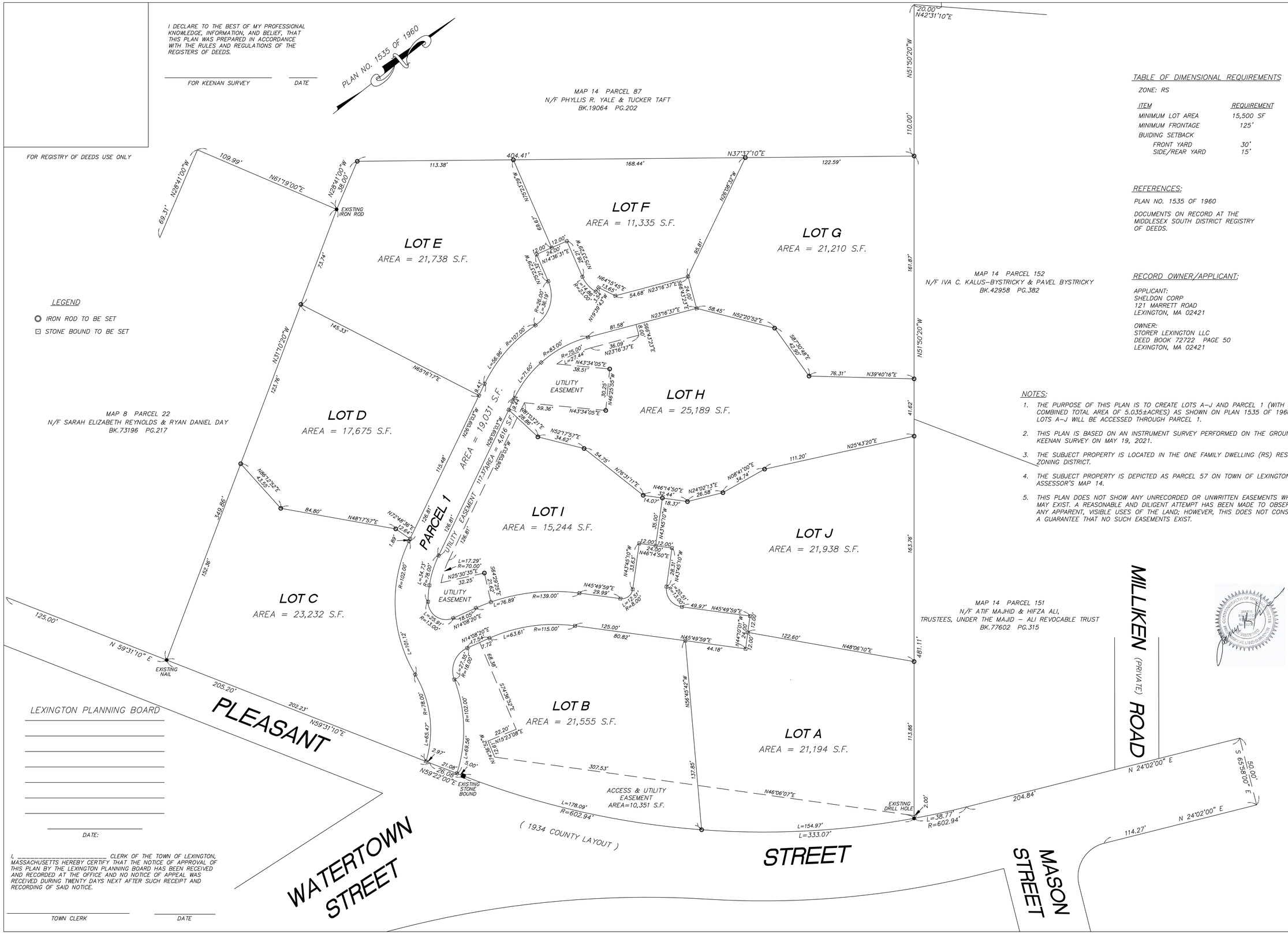

LEGEND

- IRON ROD TO BE SET
- STONE BOUND TO BE SET

I, _____ CLERK OF THE TOWN OF LEXINGTON, MASSACHUSETTS HEREBY CERTIFY THAT THE NOTICE OF APPROVAL OF THIS PLAN BY THE LEXINGTON PLANNING BOARD HAS BEEN RECEIVED AND RECORDED AT THE OFFICE AND NO NOTICE OF APPEAL WAS RECEIVED DURING TWENTY DAYS NEXT AFTER SUCH RECEIPT AND RECORDING OF SAID NOTICE.

TOWN CLERK — DATE

TABLE OF DIMENSIONAL REQUIREMENTS

ZONE: RS

ITEM	REQUIREMENT
MINIMUM LOT AREA	15,500 SF
MINIMUM FRONTAGE	125'
BUIDING SETBACK	
FRONT YARD	30'
SIDE/REAR YARD	15'

REFERENCES:

PLAN NO. 1535 OF 1960

DOCUMENTS ON RECORD AT THE MIDDLESEX SOUTH DISTRICT REGISTRY OF DEEDS.

RECORD OWNER/APPLICANT:

APPLICANT:
SHELDON CORP
121 MARRETT ROAD
LEXINGTON, MA 02421

OWNER:
STORER LEXINGTON LLC
DEED BOOK 72722 PAGE 50
LEXINGTON, MA 02421

NOTES:

1. THE PURPOSE OF THIS PLAN IS TO CREATE LOTS A–J AND PARCEL 1 (WITH A COMBINED TOTAL AREA OF 5.035±ACRES) AS SHOWN ON PLAN 1535 OF 1960. LOTS A–J WILL BE ACCESSED THROUGH PARCEL 1.
2. THIS PLAN IS BASED ON AN INSTRUMENT SURVEY PERFORMED ON THE GROUND BY KEENAN SURVEY ON MAY 19, 2021.
3. THE SUBJECT PROPERTY IS LOCATED IN THE ONE FAMILY DWELLING (RS) RESIDENTIAL ZONING DISTRICT.
4. THE SUBJECT PROPERTY IS DEPICTED AS PARCEL 57 ON TOWN OF LEXINGTON ASSESSOR'S MAP 14.
5. THIS PLAN DOES NOT SHOW ANY UNRECORDED OR UNWRITTEN EASEMENTS WHICH MAY EXIST. A REASONABLE AND DILIGENT ATTEMPT HAS BEEN MADE TO OBSERVE ANY APPARENT, VISIBLE USES OF THE LAND; HOWEVER, THIS DOES NOT CONSTITUTE A GUARANTEE THAT NO SUCH EASEMENTS EXIST.

REVISIONS

DATE	DESCRIPTION	BY

69 PLEASANT STREET

PROPERTY RIGHTS PLAN OF LAND
LOCATED IN
LEXINGTON, MASSACHUSETTS
(MIDDLESEX COUNTY)
PREPARED FOR
SHELDON CORP

KEENAN SURVEY
8 WINCHESTER PLACE
WINCHESTER, MASS.
781–729–4213

DESIGNED BY: — CHECKED BY:

DATE: JULY 20, 2022
SCALE: 1"=30'
SHEET NO. 4 OF 17
PROJECT NO.

FOR REGISTRY OF DEEDS USE ONLY

I DECLARE TO THE BEST OF MY PROFESSIONAL KNOWLEDGE, INFORMATION, AND BELIEF, THAT THIS PLAN WAS PREPARED IN ACCORDANCE WITH THE RULES AND REGULATIONS OF THE REGISTERS OF DEEDS.

FOR PATRIOT ENGINEERING *DATE*

LEXINGTON PLANNING BOARD

DATE:

I, _____ CLERK OF THE TOWN OF LEXINGTON, MASSACHUSETTS HEREBY CERTIFY THAT THE NOTICE OF APPROVAL OF THIS PLAN BY THE LEXINGTON PLANNING BOARD HAS BEEN RECEIVED AND RECORDED AT THE OFFICE AND NO NOTICE OF APPEAL WAS RECEIVED DURING TWENTY DAYS NEXT AFTER SUCH RECEIPT AND RECORDED OF SAID NOTICE.

TOWN CLERK *DATE*

30 0 15 30 60

GRAPHIC SCALE IN FEET

NOTES:

1. THE TOPOGRAPHY, SITE DETAIL & SURFACE IMPROVEMENTS DEPICTED HEREON WERE OBTAINED FROM A PLAN PREPARED BY KEENAN SURVEY.
2. THE SOLE PURPOSE OF THIS PLAN SET IS TO COMPLY WITH SECTION 135-6.9.3 OF THE TOWN OF LEXINGTON ZONING BYLAW.
3. THE SUBJECT PROPERTY DEPICTED IS LOCATED WITHIN THE RS ZONING DISTRICT.
4. THE SUBJECT PROPERTY IS DEPICTED AS LOT 57 ON THE TOWN OF LEXINGTON ASSESSOR'S MAP 14
5. THE LOCATION OF ALL UNDERGROUND UTILITIES SHOWN ARE APPROXIMATE AND ARE BASED UPON A PARTIAL FIELD SURVEY AND PLANS OF RECORD. THIS PLAN DOES NOT GUARANTEE THE LOCATION OF UTILITIES DEPICTED. THE CONTRACTOR, PRIOR TO COMMENCEMENT OF CONSTRUCTION, SHALL VERIFY THE LOCATION OF ALL UTILITIES AND CONTACT DIG SAFE AT 1-888-344-7233.
6. THIS PLAN DOES NOT SHOW ANY UNRECORDED OR UNWRITTEN EASEMENTS WHICH MAY EXIST.
7. THIS UNIT WILL BE DESIGNATED AS A MODERATE INCOME UNIT (150% AMI) EXACT FINISHED SQUARE FOOTAGE TO BE DETERMINED

TABLE OF DEVELOPMENTAL DATA

TOTAL ASSESSED LAND AREA OF DEVELOPMENT	5.04 ±AC (MAP 14, LOT 57)
TOTAL CALCULATED LAND AREA OF DEVELOPMENT	219,349 ±SF (MAP 14, LOT 57)
TOTAL ONSITE DEVELOPABLE SITE AREA	219,349 ±SF
TOTAL AREA WITH PROPOSED ROW	25,492 ±SF
TOTAL AREA OF IMPERVIOUS SURFACES WITHIN PROPOSED ROW	17,951 ± SF

(TOTAL AREA OF LOTS IN PROOF PLAN = TOTAL CALCULATED LAND AREA OF DEVELOPMENT - TOTAL AREA WITHIN PROPOSED ROW = (219,349 - 25,492) = 193,857 ±SF

193,857 SF * 0.20 = 38,771 SF

38,771 SF + (TOTAL IMPERVIOUS AREA WITHIN ROW PROOF PLAN) = (38,771 + 17,951) = 56,722 SF

TOTAL IMPERVIOUS SURFACE AREA ALLOWABLE IN A SITE SENSITIVE DEVELOPMENT (SSD) = 56,722 SF

SPECIAL PERMIT SUBDIVISION CALCULATIONS (FROM PROOF PLAN)

TYPE OF SPECIAL PERMIT RESIDENTIAL DEVELOPMENT	MAXIMUM GROSS FLOOR AREA (SF)	NO. OF DWELLINGS	MAXIMUM AMOUNT OF IMPERVIOUS SURFACES (SF)	MAXIMUM SITE COVERAGE (SF)	MINIMUM COMMON OPEN SPACE REQUIRED (SF)
SITE SENSITIVE	76,511	10	56,722	29,078	NOT REQUIRED
PROPOSED	< 76,511	10	61,350*	31,246*	NOT REQUIRED
			*WAIVER REQUESTED TO EXCEED IMPERVIOUS SURFACE LIMIT	*WAIVER REQUESTED TO EXCEED SITE COVERAGE LIMIT	

ADDITIONAL NOTES:

- ALL PATIOS AND WALKWAYS WILL BE POROUS.
- ALL STONES FROM EXISTING STONE WALLS TO BE REUSED ON SITE
- CONSTRUCTION FENCING TO BE INSTALLED AROUND PERIMETER OF PROPERTY
- PROPOSED FOUNDATIONS WILL BE USED FOR GRADING PURPOSES TO MINIMIZE RETAINING WALLS WHERE FEASIBLE

TABLE OF DIMENSIONAL REQUIREMENTS

ZONE: RS

ITEM	REQUIREMENT
MIN LOT AREA	15,500 SF
MIN FRONTAGE	125'
BUILDING SETBACKS	
FRONT YARD	30'
SIDE/REAR YARD	15'

LEGEND	DESCRIPTION
PEOP	PROPOSED EDGE OF PAVEMENT
PBB	PROPOSED BIT. BERM
●	PROPOSED AREA DRAIN (PAD)
■	PROPOSED CATCH BASIN (PCB)
244	PROPOSED CONTOUR
D	PROPOSED DRAIN MANHOLE (PDMH)
	PROPOSED FIRE HYDRANT
	PROPOSED FILTERMITT
	PROPOSED LIMIT OF WORK LINE
	RETAINING WALL
S	PROPOSED SEWER MANHOLE (PSMH)
x271	PROPOSED SPOT GRADE
	TREES TO BE REMOVED
	TREES TO BE PROTECTED
D	PROPOSED LOT
	PROPOSED TEMPORARY CONSTRUCTION PARKING

ALL UNDERGROUND UTILITY DATA REPRESENTS RECORD INFORMATION RECOVERED THROUGH RESEARCH WITHOUT SURFACE DEMARCATION NOR SUBSURFACE VERIFICATION.

LINC COLE LANE
69 PLEASANT STREET
LEXINGTON, MA

DATE: 3-30-2022
PROJECT No: 21-12
DRAWN BY:
CHECKED BY:

REVISIONS

DATE	BY	DESCRIPTION
5-23-2022	MJN	REVISIONS PER TOWN COMMENTS
7-21-2022	MJN	REVISIONS PER TOWN COMMENTS
8-1-2022	MJN	REVISIONS PER TOWN COMMENTS
8-24-2022	MJN	EXISTING HOUSE AND DRAINAGE

COMMONWEALTH OF MASSACHUSETTS MICHAEL J. NOWAK CIVIL No. 50696

PATRIOT Engineering
35 BEDFORD STREET, SUITE 4
LEXINGTON, MASSACHUSETTS 02420
T: (978) 726-2654
www.patriot-eng.com

SITE CONSTRUCTION PLAN
LOCATED IN
LEXINGTON, MA
(MIDDLESEX COUNTY)
PREPARED FOR
SHELDON CORP.

FOR REGISTRY OF DEEDS USE ONLY

I DECLARE TO THE BEST OF MY PROFESSIONAL KNOWLEDGE, INFORMATION, AND BELIEF, THAT THIS PLAN WAS PREPARED IN ACCORDANCE WITH THE RULES AND REGULATIONS OF THE REGISTERS OF DEEDS.

FOR PATRIOT ENGINEERING — DATE

LEXINGTON PLANNING BOARD

DATE:

I, _____ CLERK OF THE TOWN OF LEXINGTON, MASSACHUSETTS HEREBY CERTIFY THAT THE NOTICE OF APPROVAL OF THIS PLAN BY THE LEXINGTON PLANNING BOARD HAS BEEN RECEIVED AND RECORDED AT THE OFFICE AND NO NOTICE OF APPEAL WAS RECEIVED DURING TWENTY DAYS NEXT AFTER SUCH RECEIPT AND RECORDED OF SAID NOTICE.

TOWN CLERK — DATE

30 0 15 30 60

GRAPHIC SCALE IN FEET

NOTES:

1. THE TOPOGRAPHY, SITE DETAIL & SURFACE IMPROVEMENTS DEPICTED HEREON WERE OBTAINED FROM A PLAN PREPARED BY KEENAN SURVEY.
2. THE SOLE PURPOSE OF THIS PLAN SET IS TO COMPLY WITH SECTION 135-6.9.3 OF THE TOWN OF LEXINGTON ZONING BYLAW.
3. THE SUBJECT PROPERTY DEPICTED IS LOCATED WITHIN THE RS ZONING DISTRICT.
4. THE SUBJECT PROPERTY IS DEPICTED AS LOT 57 ON THE TOWN OF LEXINGTON ASSESSOR'S MAP 14
5. THE LOCATION OF ALL UNDERGROUND UTILITIES SHOWN ARE APPROXIMATE AND ARE BASED UPON A PARTIAL FIELD SURVEY AND PLANS OF RECORD. THIS PLAN DOES NOT GUARANTEE THE LOCATION OF UTILITIES DEPICTED. THE CONTRACTOR, PRIOR TO COMMENCEMENT OF CONSTRUCTION, SHALL VERIFY THE LOCATION OF ALL UTILITIES AND CONTACT DIG SAFE AT 1-888-344-7233.
6. THIS PLAN DOES NOT SHOW ANY UNRECORDED OR UNWRITTEN EASEMENTS WHICH MAY EXIST.

UTILITY NOTES:

1. ALL SEWER MAINS SHALL BE 8" SCH 40 PVC, UNLESS OTHERWISE NOTED.
2. ALL PROPOSED SEWER SERVICES SHALL BE 6" SCH 40 PVC AND AT A MINIMUM 2% SLOPE, UNLESS OTHERWISE NOTED.
3. ALL WATER MAINS SHALL BE 8" DI, UNLESS OTHERWISE NOTED.
4. ALL PROPOSED WATER SERVICES SHALL BE 1.5" COPPER, UNLESS OTHERWISE NOTED.
5. SEPARATION OF SEWER SERVICE BELOW WATER LINE SHALL BE 18 INCHES, IF THIS CANNOT BE ARCHIVED THE SEWER SHALL BE INCASED IN CONCRETE.
6. ALL STORM DRAIN MAINS AND LATERALS SHALL BE 12" PVC.

FINAL SIZE AND LOCATION OF EACH INDIVIDUAL LOT'S PSIS TO BE DETERMINED AT TIME OF BUILDING PERMIT SUBMITTAL.

LEGEND	DESCRIPTION
PEOP	PROPOSED EDGE OF PAVEMENT
PBB	PROPOSED BIT. BERM
●	PROPOSED AREA DRAIN (PAD)
	PROPOSED CATCH BASIN (PCB)
	PROPOSED DRAIN MANHOLE (PDMH)
PD	PROPOSED DRAIN LINE
	PROPOSED FIRE HYDRANT
	PROPOSED FILTERMITT
PG	PROPOSED GAS LINE
	PROPOSED LIMIT OF WORK LINE
	PLUG
	PROPOSED RETAINING WALL
PS	PROPOSED SEWER LINE
S	PROPOSED SEWER MANHOLE (PSMH)
PTEC	TELEPHONE CONDUIT
PW	PROPOSED WATER LINE

ALL UNDERGROUND UTILITY DATA REPRESENTS RECORD INFORMATION RECOVERED THROUGH RESEARCH WITHOUT SURFACE DEMARCATION NOR SUBSURFACE VERIFICATION.

LINC COLE LANE
69 PLEASANT STREET
LEXINGTON, MA

DRAWN BY:
CHECKED BY:
DATE: 3-30-2022
PROJECT No: 21-12

REVISIONS

DATE	BY	DESCRIPTION
5-23-2022	MJN	REVISIONS PER TOWN COMMENTS
7-21-2022	MJN	REVISIONS PER TOWN COMMENTS
8-1-2022	MJN	REVISIONS PER TOWN COMMENTS
8-24-2022	MJN	EXISTING HOUSE AND DRAINAGE

COMMONWEALTH OF MASSACHUSETTS MICHAEL J. NOVAK CIVIL No. 50696 REGISTERED PROFESSIONAL ENGINEER

PATRIOT Engineering
35 BEDFORD STREET, SUITE 4
LEXINGTON, MASSACHUSETTS 02420
T: (978) 726-2654
www.patriot-eng.com

SITE UTILITY PLAN
LOCATED IN
LEXINGTON, MA
(MIDDLESEX COUNTY)
PREPARED FOR
SHELDON CORP.

FOR REGISTRY OF DEEDS USE ONLY

I DECLARE TO THE BEST OF MY PROFESSIONAL KNOWLEDGE, INFORMATION, AND BELIEF, THAT THIS PLAN WAS PREPARED IN ACCORDANCE WITH THE RULES AND REGULATIONS OF THE REGISTERS OF DEEDS.

FOR PATRIOT ENGINEERING — DATE

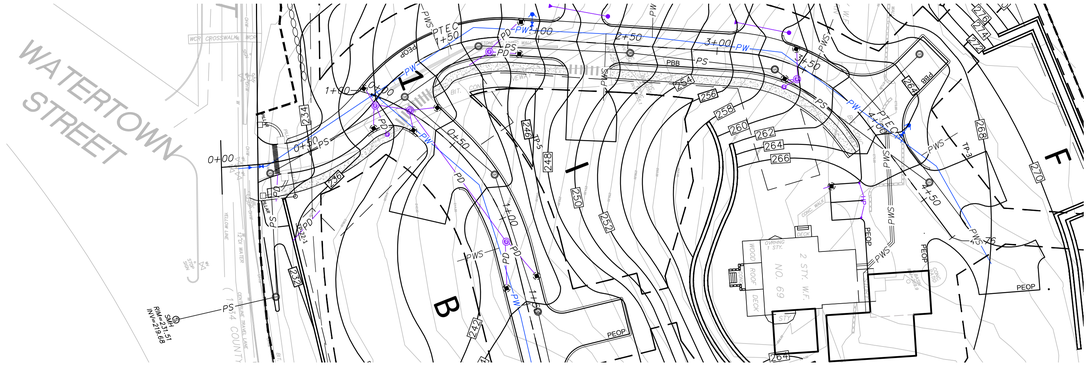

PLAN VIEW DRIVE-1
SCALE: 1"=40'

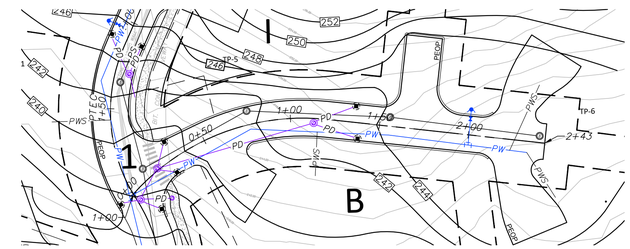

PLAN VIEW DRIVE-2
SCALE: 1"=40'

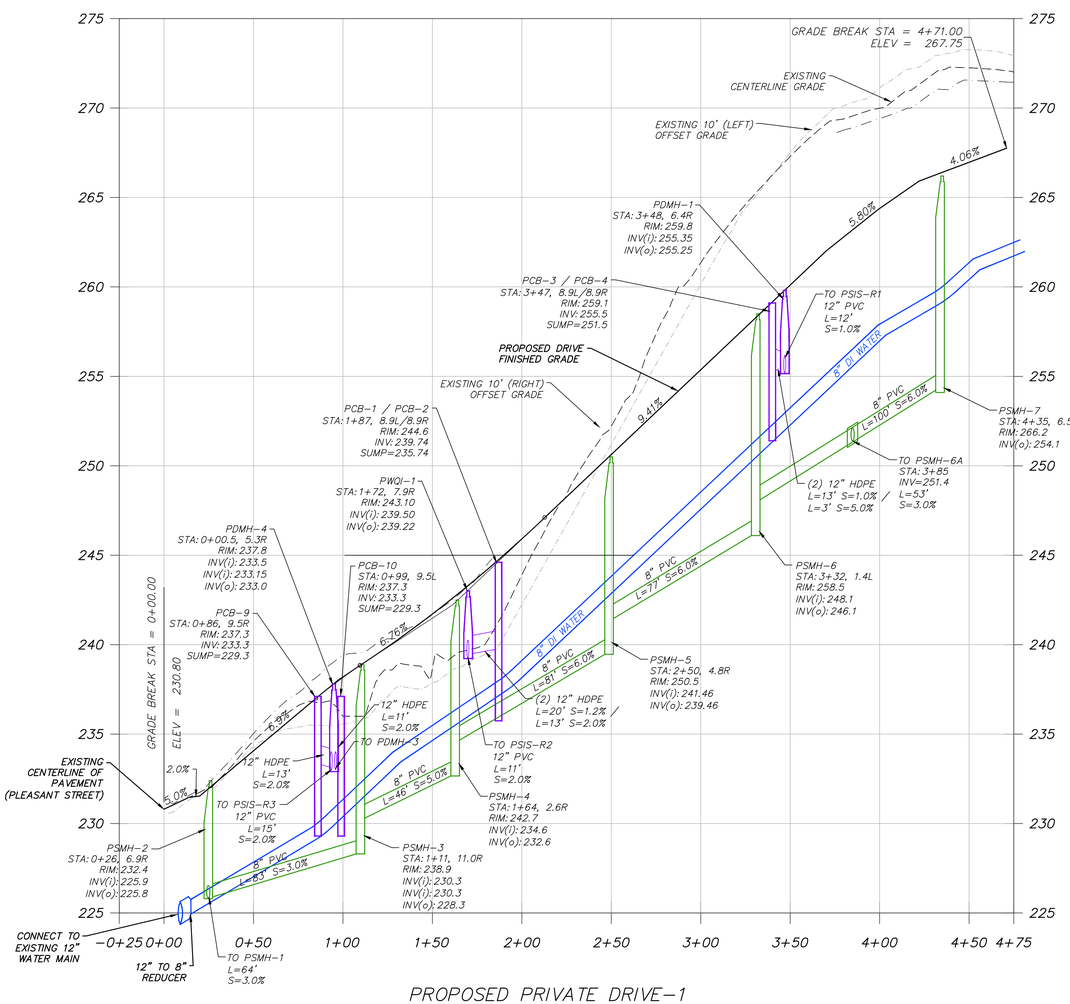

PROPOSED PRIVATE DRIVE-1

PROFILE VIEW
SCALE: 1"=4' VERT.
1"=40' HOR.

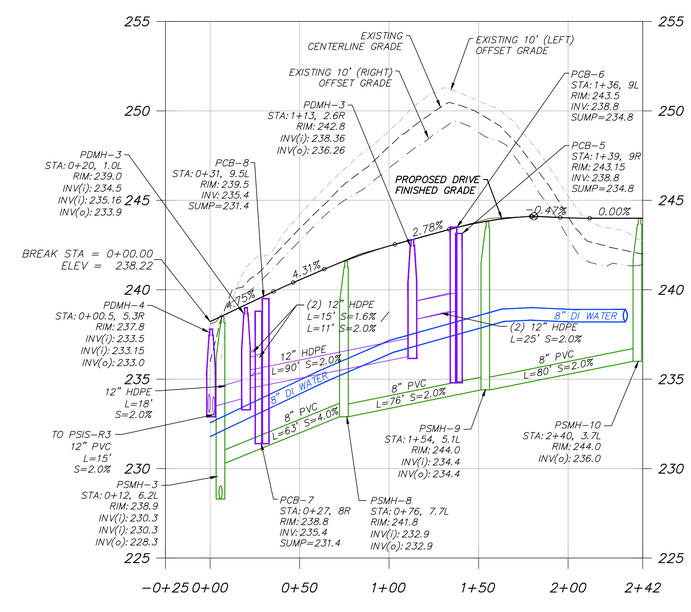

PROPOSED PRIVATE DRIVE-2

PROFILE VIEW
SCALE: 1"=4' VERT.
1"=40' HOR.

PROFILE NOTE:
ALL PIPE LENGTHS LISTED ABOVE ARE CENTER OF STRUCTURE TO CENTER OF STRUCTURE MEASUREMENTS.

ALL UNDERGROUND UTILITY DATA REPRESENTS RECORD INFORMATION RECOVERED THROUGH RESEARCH WITHOUT SURFACE DEMARCATION NOR SUBSURFACE VERIFICATION.

LEXINGTON PLANNING BOARD

DATE:

I, _____ CLERK OF THE TOWN OF LEXINGTON, MASSACHUSETTS HEREBY CERTIFY THAT THE NOTICE OF APPROVAL OF THIS PLAN BY THE LEXINGTON PLANNING BOARD HAS BEEN RECEIVED AND RECORDED AT THE OFFICE AND NO NOTICE OF APPEAL WAS RECEIVED DURING TWENTY DAYS NEXT AFTER SUCH RECEIPT AND RECORDED OF SAID NOTICE.

TOWN CLERK — DATE

LINC COLE LANE
69 PLEASANT STREET
LEXINGTON, MA

DRAWN BY: DATE: 3-30-2022
CHECKED BY: PROJECT No: 21-12

REVISIONS

DATE	BY	DESCRIPTION
5-23-2022	MJN	REVISIONS PER TOWN COMMENTS
7-21-2022	MJN	REVISIONS PER TOWN COMMENTS
8-1-2022	MJN	REVISIONS PER TOWN COMMENTS
8-24-2022	MJN	EXISTING HOUSE AND DRAINAGE

COMMONWEALTH OF MASSACHUSETTS
MICHAEL J. NOVAK
CIVIL
No. 39596
REGISTERED PROFESSIONAL ENGINEER

PATRIOT Engineering
35 BEDFORD STREET, SUITE 4
LEXINGTON, MASSACHUSETTS 02420
T: (978) 726-2654
www.patriot-eng.com

UTILITY PROFILE PLAN
LOCATED IN
LEXINGTON, MA
(MIDDLESEX COUNTY)
PREPARED FOR
SHELDON CORP.

FOR REGISTRY OF DEEDS USE ONLY

I DECLARE TO THE BEST OF MY PROFESSIONAL KNOWLEDGE, INFORMATION, AND BELIEF, THAT THIS PLAN WAS PREPARED IN ACCORDANCE WITH THE RULES AND REGULATIONS OF THE REGISTERS OF DEEDS.

FOR PATRIOT ENGINEERING DATE

PLANT LIST

	BOTANICAL NAME	COMMON NAME	QTY	SIZE	NOTES
DECIDUOUS TREES					
LS	LIQUIDAMBAR STYRACIFLUA	SWEET GUM	19	3"–3.5" CAL.	B&B
QR	QUERCUS RUBRA	RED OAK	19	3"–3.5" CAL.	B&B
ORNAMENTAL TREES					
CF	CORNUS FLORIDA	FLOWERING DOGWOOD	14	12', 3"C	B&B
EVERGREEN TREES					
TC	TSUGA CANADENSIS	CANADIAN HEMLOCK	27	8'–10', 3"C	B&B
SHRUBS					
PERENNIALS					
HH	HEMEROCALLIS 'HAP. RETURNS'	H. RETURNS DAYLILLY	115	#2 POT	C.G.
CS	CHRYSANTHEMUM X SUPERBUM	SHASTA DAISY 'ALASKA'	115	#2 POT	C.G.

NOTE: THE ABOVE PLANT LIST WAS DEVELOPED USING THE LEXINGTON PREFERRED PLANT LIST AS ADOPTED ON OCTOBER 6, 2021. THE LARGE SHADE TREES WERE SELECTED FROM THE RECOMMENDED LARGE SHADE TREES LIST OF THE LEXINGTON TREE MANUAL SECTION V.B.5 AS REFERENCED IN CHAPTER 120 OF THE LEXINGTON GENERAL BYLAWS, ENTITLED "TREES". 100% OF THE TOTAL DBHs OF ALL PROPOSED TREES ARE NATIVE TREES FROM THE LEXINGTON PREFERRED PLANT LIST. 100% OF THE SHRUBS ARE NATIVE SPECIES FROM THE LEXINGTON PREFERRED PLANT LIST. RED OAK, KENTUCKY COFFEE TREE AND WHITE PINE ARE TREE SPECIES SELECTED FROM THE RECOMMENDED LARGE SHADE TREES LIST IN THE LEXINGTON TREE MANUAL REFERENCED ABOVE.

**PLANTS WITHOUT QUANTITIES IN THE LIST ARE PROPOSED FOR USE ON FUTURE FOUNDATION PLANTINGS WITHIN THE INDIVIDUAL LOTS SHOWN ON THE PLAN.

LANDSCAPE NOTES:

1. SEE SHEET 4 FOR GENERAL NOTES AND LEGEND
2. THE LOCATIONS OF EXISTING UNDERGROUND UTILITIES ARE SHOWN IN AN APPROXIMATE WAY ONLY AND HAVE NOT BEEN INDEPENDENTLY VERIFIED BY THE OWNER OR ITS REPRESENTATIVE. THE CONTRACTOR SHALL DETERMINE THE EXACT LOCATION OF ALL EXISTING UTILITIES BEFORE COMMENCING WORK, AND AGREES TO BE FULLY RESPONSIBLE FOR ANY AND ALL DAMAGES WHICH MAY BE OCCASIONED BY THE CONTRACTOR'S FAILURE TO EXACTLY LOCATE AND PRESERVE ALL UNDERGROUND UTILITIES.
3. CONTRACTOR SHALL BEGIN MAINTENANCE IMMEDIATELY AFTER PLANTING AND WILL CONTINUE UNTIL FINAL WRITTEN ACCEPTANCE OF PLANT MATERIAL.
4. ALL MATERIALS SHALL CONFORM TO THE GUIDELINES ESTABLISHED BY THE AMERICAN NURSERY AND LANDSCAPE ASSOCIATION.
5. ALL PLANTS SHALL BEAR THE SAME RELATIONSHIP TO FINISH GRADE AS TO ORIGINAL GRADES BEFORE DIGGING.
6. ALL PLANTS TO BE BALLED IN BURLAP OR CONTAINERIZED.
7. ALL PLANTED AREAS TO BE EDGED AND MULCHED WITH AGED PINE BARK: PARTIALLY DECOMPOSED,DARK BROWN IN COLOR AND FREE OF WOOD CHIPS THICKER THAN 1/4 INCH.
8. PLANTING SOIL MIX: UTILIZE EXISTING SITE LOAM FROM STOCKPILES. THOROUGHLY INCORPORATE WITH COMPOST AS NEEDED PER SOILS ANALYSIS. FERTILIZE PER RECOMMENDED RATES IN SOIL ANALYSIS.
9. THE LANDSCAPE CONTRACTOR SHALL GUARANTEE ALL PLANT MATERIALS FOR ONE (1) FULL YEAR FROM DATE OF ACCEPTANCE.
10. ALL PLANT MATERIALS ARE SUBJECT TO THE APPROVAL OF THE LANDSCAPE ARCHITECT, AT THE NURSERY, AND AT THE SITE.
11. ALL AREAS OF THE SITE WHICH HAVE BEEN DISTURBED AND NOT OTHERWISE DEVELOPED SHALL BE LOAMED AND SEEDED WITH A MINIMUM DEPTH OF 6" DEPTH TOPSOIL UNLESS OTHERWISE NOTED.

PLAN NO. 1535 OF 1960

LEGEND

- PROP. SHADE TREE
- PROP. EVERGREEN TREE
- PROP. ORNAMENTAL TREE
- PROPOSED SHRUB PLANTING
- EX.TREE T.B.R
- EX.TREE T.B. PROTECTED

GRAPHIC SCALE
SCALE: 1"=30'
15 0 15 30 60 120

LEXINGTON PLANNING BOARD

DATE:

I, _____ CLERK OF THE TOWN OF LEXINGTON, MASSACHUSETTS HEREBY CERTIFY THAT THE NOTICE OF APPROVAL OF THIS PLAN BY THE LEXINGTON PLANNING BOARD HAS BEEN RECEIVED AND RECORDED AT THE OFFICE AND NO NOTICE OF APPEAL WAS RECEIVED DURING TWENTY DAYS NEXT AFTER SUCH RECEIPT AND RECORDED OF SAID NOTICE.

TOWN CLERK DATE

69 PLEASANT STREET
LEXINGTON, MA

DRAWN BY: JAT
CHECKED BY: JAT
DATE: 03.30.2022
PROJECT No.21-12

REVISIONS

DATE	BY	DESCRIPTION
07.22.2022	JAT	PLANNING BOARD COMMENTS
08.24.2022	JAT	REV. STREET TREE PLANTING

MASSACHUSETTS JEFFREY A. THOMALA No. 1371 REGISTERED LANDSCAPE ARCHITECT

J T HOMA
Land Design Studios
141 Haggetts Pond Rd
Andover, MA 01810
978.409.9815 - www.jthomalds.com

J THOMA LAND DESIGN STUDIOS LDS Live Work Play

LANDSCAPE PLAN
LOCATED IN
LEXINGTON, MA
(MIDDLESEX COUNTY)
PREPARED FOR
SHELDON CORP.

FOR REGISTRY OF DEEDS USE ONLY

I DECLARE TO THE BEST OF MY PROFESSIONAL KNOWLEDGE, INFORMATION, AND BELIEF, THAT THIS PLAN WAS PREPARED IN ACCORDANCE WITH THE RULES AND REGULATIONS OF THE REGISTERS OF DEEDS.

FOR PATRIOT ENGINEERING — DATE

List of Protected Trees To Be Removed (Trees 6" DBH or greater within setback area)

Tree #			Tree Size - DBH (in inches)	Description		Reqd. Replacement Inches
	1		7	Hemlock		7
	2		28	Oak		112
	3		15	Maple		15
	4		17	Pine		17
	5		26	Pine		104
	6		19	Pine (7" + 12")		19
	7		17	Pine		17
	8		18	Pine		18
	9		16	Hemlock (8" +8")		16
	10		10	Maple		10
	11		9	Pine		9
	12		6	Maple		6
	13		21	Oak		21
	14		6	Oak		6
	15		15	Oak		15
	16		17	Oak		17
	17		12	Oak		12
	18		17	Oak		17
	19		8	Oak		8
	20		15	Oak		15
	21		11	Oak		11
	22		9	Hemlock		9
	23		11	Oak		11
	24		15	Oak		15
Total No.	24	Total Caliper Inches	345	Total Reqd. Replacement Inches		507

Additional Tree Removal & Mitigation Information (Trees 6" DBH or greater on entire site)

	Quantity	DBH (In Inches)	Replacement Rate	Proposed Replacement Inches
TOTAL NUMBER OF TREES REMOVED	190	2228		
TOTAL NUMBER OF TREES SAVED	104	1018		
PROPOSED 3" CALIPER SHADE TREES	38	114	1:4	456
(FROM RECOMMENDED LARGE SHADE TREE LIST)				
PROPOSED 3" CALIPER TREES	41	123	1:1	123
		Total Proposed. Replacement Inches		579

PROTECTION REQUIREMENTS FOR EXISTING TREES

1. **Barrier Protection -** Protect all trees to be saved before demolition and land clearing begins. Install barrier at locations shown on plan. To the extent possible install tree protection barrier/fencing at the drip line of the tree. This may be modified to a location agreed to during an on-site visit by the Tree Warden. Construct barriers of 60" wood stakes and 4' orange snow fence (highly visible plastic mesh). This protection will prohibit heavy equipment from compacting soil, damaging roots, breaking branches and scarring the tree trunk. **See Detail #1 - Tree Protection Fencing this sheet.**
2. **Weights under Tree** - Park vehicles, equipment, or stockpile earth, fill and other materials ONLY OUTSIDE the tree root zone.
3. **Chemical Damage -** Dispose of all debris properly (rubble, cement, asphalt, petroleum products, herbicides, all chemicals) away from the tree root zone.
4. **Leaf Mulch -** Allow fallen leaves from the trees within the root zone to remain on the ground as mulch. If leaves are on the lawn, they can be raked up or mowed.
5. **Flooding** - Provide proper drainage so that roots of trees are free of standing water.
6. **Fasteners -** Use separate posts instead of trees for fastening signs, fences, electrical wires and pulley stays.
7. **Utility Lines -** Locate all new underground utility lines outside the critical root zone of trees to be saved. If not possible, tunnel under roots as an alternative.
8. **Watering -** During dry spells in the growing season, water trees once a week so that the water penetrates 12 to 18 inches into the soil.

LEGEND

EX.TREE T.B.R — DBH 10"

EX.TREE T.B. PROTECTED — DBH 10"

EX.TREE TO REMAIN OUTSIDE L.O.W. — DBH 10"

TREE PROTECTION FENCE

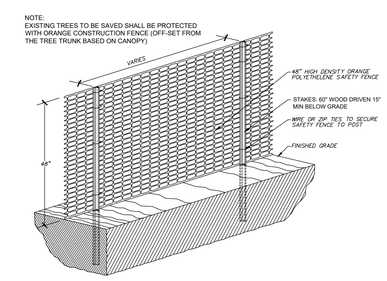

1 TREE PROTECTION FENCING
SCALE: N.T.S.

LEXINGTON PLANNING BOARD

DATE:

I, _____ CLERK OF THE TOWN OF LEXINGTON, MASSACHUSETTS HEREBY CERTIFY THAT THE NOTICE OF APPROVAL OF THIS PLAN BY THE LEXINGTON PLANNING BOARD HAS BEEN RECEIVED AND RECORDED AT THE OFFICE AND NO NOTICE OF APPEAL WAS RECEIVED DURING TWENTY DAYS NEXT AFTER SUCH RECEIPT AND RECORDED OF SAID NOTICE.

TOWN CLERK — DATE

GRAPHIC SCALE
SCALE: 1"=30'
15 0 15 30 60 120

69 PLEASANT STREET
LEXINGTON, MA

DRAWN BY: JAT — DATE: 03.30.2022
CHECKED BY: JAT — PROJECT No:21-12

REVISIONS

DATE	BY	DESCRIPTION
07.22.2022	JAT	PLANNING BOARD COMMENTS
08.24.2022		REV. DRIVE LAYOUT

MASSACHUSETTS REGISTERED LANDSCAPE ARCHITECT JEFFREY A. THOMA No. 1377

J T HOMA
Land Design Studios
141 Haggetts Pond Rd
Andover, MA 01810
978.409.9815 - www.jthomalds.com

J THOMA LAND DESIGN STUDIOS LDS Live Work Play

TREE PROTECTION AND REMOVAL PLAN
LOCATED IN: LEXINGTON, MA
(MIDDLESEX COUNTY)
PREPARED FOR
SHELDON CORP.

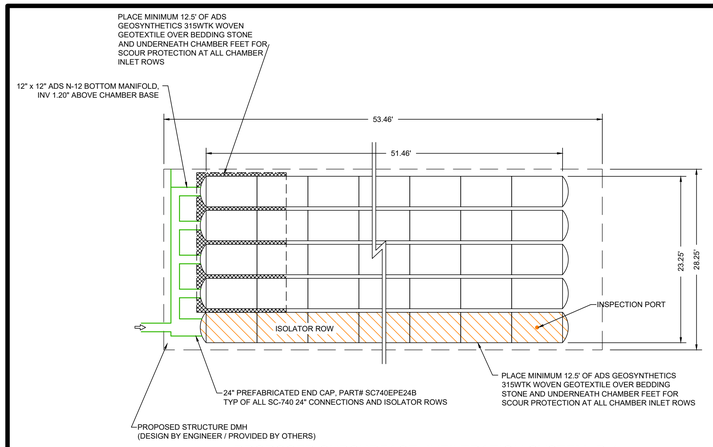

PROPOSED SUBSURFACE INFILTRATION SYSTEM R-1

PROPOSED R-1 LAYOUT
(35) STORMTECH SC-740 CHAMBERS (7X5)
INSTALLED WITH
6" COVER STONE
6" BASE STONE
30" SIDE STONE
40% STONE VOID
INSTALLED SYSTEM VOLUME: 3,085 CF

PROPOSED ELEVATIONS

MINIMUM ALLOWABLE GRADE (TOP OF PAVEMENT/UNPAVED):	259.00
TOP OF STONE:	258.00
TOP OF CHAMBER:	257.50
12" TOP CONNECTION INVERT:	255.10
BOTTOM OF CHAMBER:	254.00
BOTTOM OF STONE:	253.50

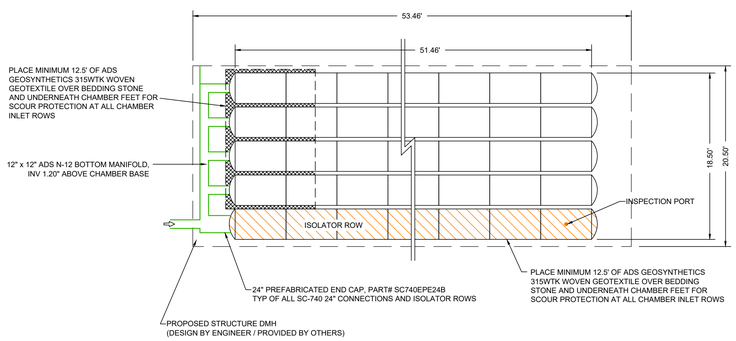

PROPOSED SUBSURFACE INFILTRATION SYSTEM R-2

PROPOSED R-2 LAYOUT
(28) STORMTECH SC-740 CHAMBERS (7X4)
INSTALLED WITH
6" COVER STONE
6" BASE STONE
12" SIDE STONE
40% STONE VOID
INSTALLED SYSTEM VOLUME: 2,311 CF

PROPOSED ELEVATIONS

MINIMUM ALLOWABLE GRADE (TOP OF PAVEMENT/UNPAVED):	241.80
TOP OF STONE:	240.80
TOP OF CHAMBER:	240.30
12" TOP CONNECTION INVERT:	239.00
BOTTOM OF CHAMBER:	237.80
BOTTOM OF STONE:	237.30

LEXINGTON PLANNING BOARD

_____

_____

_____

_____

_____

_____

_____

DATE:

I, _____ CLERK OF THE TOWN OF LEXINGTON, MASSACHUSETTS HEREBY CERTIFY THAT THE NOTICE OF APPROVAL OF THIS PLAN BY THE LEXINGTON PLANNING BOARD HAS BEEN RECEIVED AND RECORDED AT THE OFFICE AND NO NOTICE OF APPEAL WAS RECEIVED DURING TWENTY DAYS NEXT AFTER SUCH RECEIPT AND RECORDED OF SAID NOTICE.

_____ _____

TOWN CLERK *DATE*

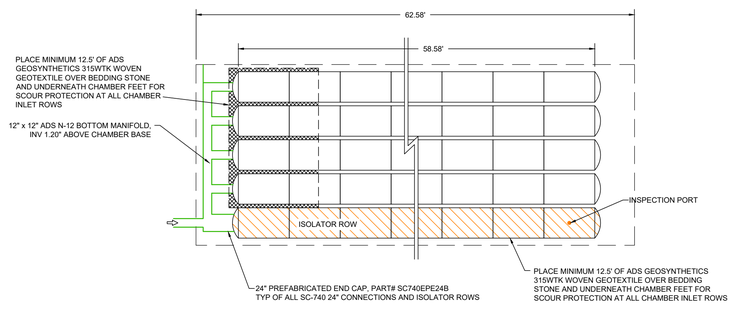

PROPOSED SUBSURFACE INFILTRATION SYSTEM R-3

PROPOSED R-3 LAYOUT
(40) STORMTECH SC-740 CHAMBERS (8X5)
INSTALLED WITH
6" COVER STONE
6" BASE STONE
24" SIDE STONE
40% STONE VOID
INSTALLED SYSTEM VOLUME: 3,490 CF

PROPOSED ELEVATIONS

MINIMUM ALLOWABLE GRADE (TOP OF PAVEMENT/UNPAVED):	236.50
TOP OF STONE:	235.50
TOP OF CHAMBER:	235.00
12" TOP CONNECTION INVERT:	239.00
BOTTOM OF CHAMBER:	232.50
BOTTOM OF STONE:	232.00

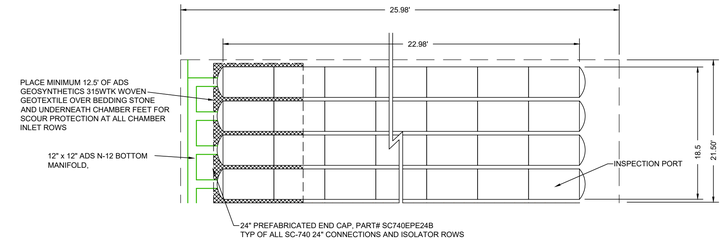

PROPOSED SUBSURFACE INFILTRATION SYSTEM (PROPOSED ROOF-PR)

PROPOSED PR-1 LAYOUT
(12) STORMTECH SC-740 CHAMBERS (3X4)
INSTALLED WITH
6" COVER STONE
6" BASE STONE
18" SIDE STONE
40% STONE VOID
INSTALLED SYSTEM VOLUME: 1,115 CF

FINAL SIZE, LOCATION, AND ELEVATION OF EACH PROPOSED ROOF SYSTEM TO BE DETERMINED AT TIME OF BUILDING PERMIT SUBMITTAL.

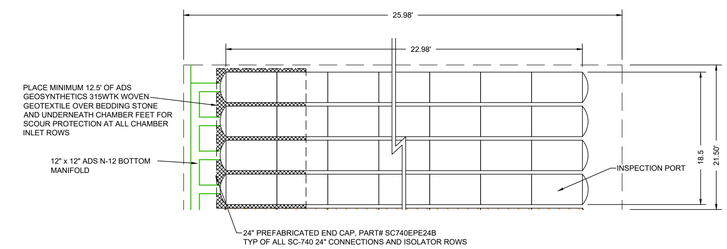

PROPOSED SUBSURFACE INFILTRATION SYSTEM (P-SL)

PROPOSED PR-1 LAYOUT
(16) STORMTECH SC-740 CHAMBERS (4X4)
INSTALLED WITH
6" COVER STONE
6" BASE STONE
18" SIDE STONE
40% STONE VOID
INSTALLED SYSTEM VOLUME: 1,440 CF

FINAL SIZE, LOCATION, AND ELEVATION OF EACH PROPOSED ROOF SYSTEM TO BE DETERMINED AT TIME OF BUILDING PERMIT SUBMITTAL.

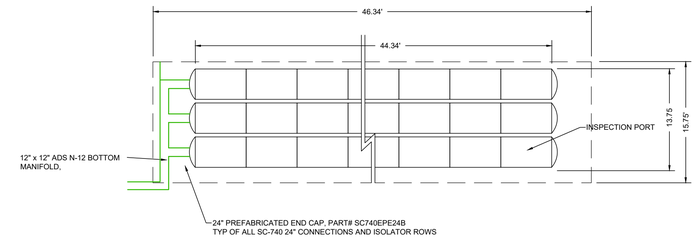

PROPOSED SUBSURFACE INFILTRATION SYSTEM (EXISTING ROOF)

PROPOSED ER-1 LAYOUT
(18) STORMTECH SC-740 CHAMBERS (6X3)
INSTALLED WITH
6" COVER STONE
6" BASE STONE
18" SIDE STONE
40% STONE VOID
INSTALLED SYSTEM VOLUME: 1,521 CF

PROPOSED ELEVATIONS

MINIMUM ALLOWABLE GRADE (TOP OF PAVEMENT/UNPAVED):	265.5
TOP OF STONE:	264.5
TOP OF CHAMBER:	264.0
BOTTOM OF CHAMBER:	261.5
BOTTOM OF STONE:	261.0

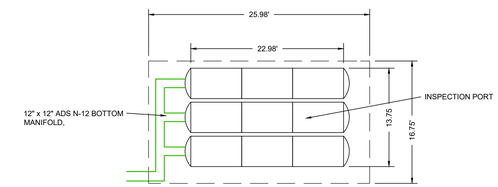

PROPOSED SUBSURFACE INFILTRATION SYSTEM (MIU)

PROPOSED ER-1 LAYOUT
(9) STORMTECH SC-740 CHAMBERS (3X3)
INSTALLED WITH
6" COVER STONE
6" BASE STONE
18" SIDE STONE
40% STONE VOID
INSTALLED SYSTEM VOLUME: 1,521 CF

PROPOSED ELEVATIONS

MINIMUM ALLOWABLE GRADE (TOP OF PAVEMENT/UNPAVED):	260.5
TOP OF STONE:	259.5
TOP OF CHAMBER:	259.0
BOTTOM OF CHAMBER:	256.5
BOTTOM OF STONE:	256.0

ACCEPTABLE FILL MATERIALS: STORMTECH SC-740 CHAMBER SYSTEMS

	MATERIAL LOCATION	DESCRIPTION	AASHTO MATERIAL CLASSIFICATIONS	COMPACTION / DENSITY REQUIREMENT
D	**FINAL FILL:** FILL MATERIAL FOR LAYER 'D' STARTS FROM THE TOP OF THE 'C' LAYER TO THE BOTTOM OF FLEXIBLE PAVEMENT OR UNPAVED FINISHED GRADE ABOVE. NOTE THAT PAVEMENT SUBBASE MAY BE PART OF THE 'D' LAYER.	ANY SOILS/ROCK MATERIALS, NATIVE SOILS, OR PER ENGINEER'S PLANS. CHECK PLANS FOR PAVEMENT SUBGRADE REQUIREMENTS.	N/A	PREPARE PER SITE DESIGN ENGINEER'S PLANS. PAVED INSTALLATIONS MAY HAVE STRINGENT MATERIAL AND PREPARATION REQUIREMENTS.
C	**INITIAL FILL:** FILL MATERIAL FOR LAYER 'C' STARTS FROM THE TOP OF THE EMBEDMENT STONE (18" LAYER) TO 18" (450 mm) ABOVE THE TOP OF THE CHAMBER. NOTE THAT PAVEMENT SUBBASE MAY BE A PART OF THE 'C' LAYER.	GRANULAR WELL-GRADED SOIL/AGGREGATE MIXTURES, <35% FINES OR PROCESSED AGGREGATE. MOST PAVEMENT SUBBASE MATERIALS CAN BE USED IN LIEU OF THIS LAYER.	AASHTO M145[1] A-1, A-2-4, A-3 OR AASHTO M43[1] 3, 357, 4, 467, 5, 56, 57, 6, 67, 68, 7, 78, 8, 89, 9, 10	BEGIN COMPACTIONS AFTER 12" (300 mm) OF MATERIAL OVER THE CHAMBERS IS REACHED. COMPACT ADDITIONAL LAYERS IN 6" (150 mm) MAX LIFTS TO A MIN. 95% PROCTOR DENSITY FOR WELL GRADED MATERIAL AND 95% RELATIVE DENSITY FOR PROCESSED AGGREGATE MATERIALS. ROLLER GROSS VEHICLE WEIGHT NOT TO EXCEED 12,000 lbs (53 kN). DYNAMIC FORCE NOT TO EXCEED 20,000 lbs (89 kN).
B	**EMBEDMENT STONE:** FILL SURROUNDING THE CHAMBERS FROM THE FOUNDATION STONE ("A" LAYER) TO THE "C" LAYER ABOVE.	CLEAN, CRUSHED, ANGULAR STONE	AASHTO M43[1] 3, 357, 4, 467, 5, 56, 57	NO COMPACTION REQUIRED.
A	**FOUNDATION STONE:** FILL BELOW CHAMBERS FROM THE SUBGRADE UP TO THE FOOT (BOTTOM) OF THE CHAMBER.	CLEAN, CRUSHED, ANGULAR STONE	AASHTO M43[1] 3, 357, 4, 467, 5, 56, 57	PLATE COMPACT OR ROLL TO ACHIEVE A FLAT SURFACE.[2,3]

PLEASE NOTE:
1. THE LISTED AASHTO DESIGNATIONS ARE FOR GRADATIONS ONLY. THE STONE MUST ALSO BE CLEAN, CRUSHED, ANGULAR. FOR EXAMPLE, A SPECIFICATION FOR #4 STONE WOULD STATE: "CLEAN, CRUSHED, ANGULAR NO. 4 (AASHTO M43) STONE".
2. STORMTECH COMPACTION REQUIREMENTS ARE MET FOR 'A' LOCATION MATERIALS WHEN PLACED AND COMPACTED IN 6" (150 mm) (MAX) LIFTS USING TWO FULL COVERAGES WITH A VIBRATORY COMPACTOR.
3. WHERE INFILTRATION SURFACES MAY BE COMPROMISED BY COMPACTION, FOR STANDARD DESIGN LOAD CONDITIONS, A FLAT SURFACE MAY BE ACHIEVED BY RAKING OR DRAGGING WITHOUT COMPACTION EQUIPMENT. FOR SPECIAL LOAD DESIGNS, CONTACT STORMTECH FOR COMPACTION REQUIREMENTS.
4. ONCE LAYER 'C' IS PLACED, ANY SOIL/MATERIAL CAN BE PLACED IN LAYER 'D' UP TO THE FINISHED GRADE. MOST PAVEMENT SUBBASE SOILS CAN BE USED TO REPLACE THE MATERIAL REQUIREMENTS OF LAYER 'C' OR 'D' AT THE SITE DESIGN ENGINEER'S DISCRETION.

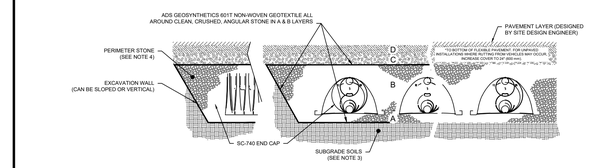

NOTES:
1. CHAMBERS SHALL MEET THE REQUIREMENTS OF ASTM F2418-16a. "STANDARD SPECIFICATION FOR POLYPROPYLENE (PP) CORRUGATED WALL STORMWATER COLLECTION CHAMBERS".
2. SC-740 CHAMBERS SHALL BE DESIGNED IN ACCORDANCE WITH ASTM F2787 "STANDARD PRACTICE FOR STRUCTURAL DESIGN OF THERMOPLASTIC CORRUGATED WALL STORMWATER COLLECTION CHAMBERS".
3. THE SITE DESIGN ENGINEER IS RESPONSIBLE FOR ASSESSING THE BEARING RESISTANCE (ALLOWABLE BEARING CAPACITY) OF THE SUBGRADE SOILS AND THE DEPTH OF FOUNDATION STONE WITH CONSIDERATION FOR THE RANGE OF EXPECTED SOIL MOISTURE CONDITIONS.
4. PERIMETER STONE MUST BE EXTENDED HORIZONTALLY TO THE EXCAVATION WALL FOR BOTH VERTICAL AND SLOPED EXCAVATION WALLS.
5. REQUIREMENTS FOR HANDLING AND INSTALLATION:
   - TO MAINTAIN THE WIDTH OF CHAMBERS DURING SHIPPING AND HANDLING, CHAMBERS SHALL HAVE INTEGRAL, INTERLOCKING STACKING LUGS.
   - TO ENSURE A SECURE JOINT DURING INSTALLATION AND BACKFILL, THE HEIGHT OF THE CHAMBER JOINT SHALL NOT BE LESS THAN 2".
   - TO ENSURE THE INTEGRITY OF THE ARCH SHAPE DURING INSTALLATION, a) THE ARCH STIFFNESS CONSTANT AS DEFINED IN SECTION 6.2.8 OF ASTM F2418 SHALL BE GREATER THAN OR EQUAL TO 550 LBS/IN/IN. AND b) TO RESIST CHAMBER DEFORMATION DURING INSTALLATION AT ELEVATED TEMPERATURES (ABOVE 73° F / 23° C), CHAMBERS SHALL BE PRODUCED FROM REFLECTIVE GOLD OR YELLOW COLORS.

PROPOSED SUBSURFACE INFILTRATION SYSTEM CROSS SECTION (TYPICAL)

ALL DETAILS ARE NOT TO SCALE

MHT CARGO FACILITY
LONDONDERRY, NH
DATE: 03/11/2022 DRAWN: AJC
SHEET: 3 OF 5
DESCRIPTION: PROPOSED SUBSURFACE INFILTRATION
FIELD TWEAK CHAN
DATE BY DESCRIPTION
Stormtech
70 INDUSTRIAL DRIVE | CHESTER, CT 06412
1-800-733-7473
ADS
4640 TRUEMAN BLVD HILLIARD, OH 43026
1-800-821-6710
SHEET 3 OF 5

LINC COLE LANE
69 PLEASANT STREET
LEXINGTON, MA

DATE: 3-30-2022
DRAWN BY:
PROJECT No: 21-12
CHECKED BY:

REVISIONS

DATE	BY	DESCRIPTION
5-23-2022	MJN	REVISIONS PER TOWN COMMENTS
7-21-2022	MJN	REVISIONS PER TOWN COMMENTS
8-1-2022	MJN	REVISIONS PER TOWN COMMENTS
8-24-2022	MJN	REVISIONS PER TOWN COMMENTS

COMMONWEALTH OF MASSACHUSETTS
MICHAEL J. NOVAK
CIVIL
No. 50596
REGISTERED PROFESSIONAL ENGINEER

PATRIOT Engineering
35 BEDFORD STREET, SUITE 4
LEXINGTON, MASSACHUSETTS 02420
T: (978) 726-2654
www.patriot-eng.com

SITE DETAILS
LOCATED IN
LEXINGTON, MA
(MIDDLESEX COUNTY)
PREPARED FOR
SHELDON CORP.

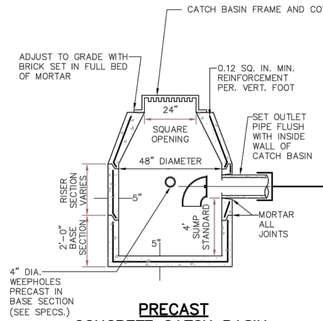

PRECAST CONCRETE CATCH BASIN
(WITH 4 FLANGE CATCH BASIN FRAME)

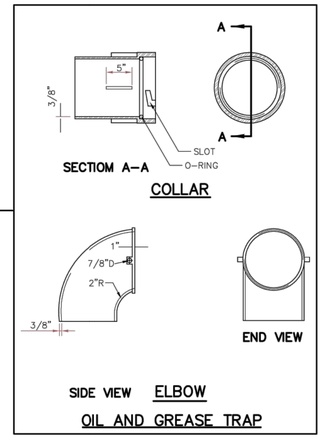

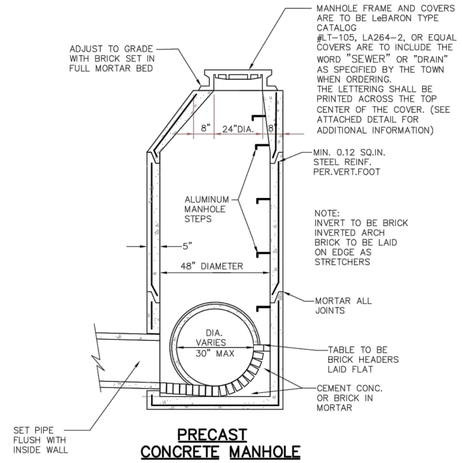

PRECAST CONCRETE MANHOLE

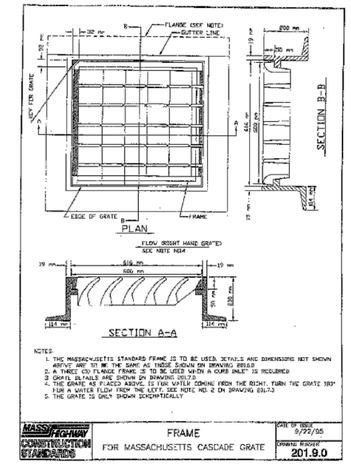

CATCH BASIN FRAME AND GRATE
N.T.S.

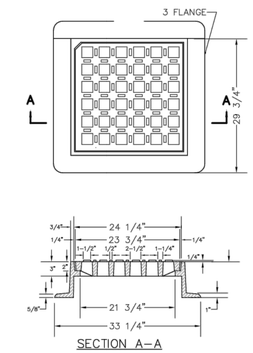

NOTE: FRAME AND GRATE SHALL BE HEAVY DUTY CLASS 30 GRAY IRON.

CATCH BASIN FRAME AND GRATE
N.T.S.

NOTE: CATCH BASIN FRAME AND COVERS ARE TO BE LeBARON TYPE CATALOG #LF248-3 OR EQUAL

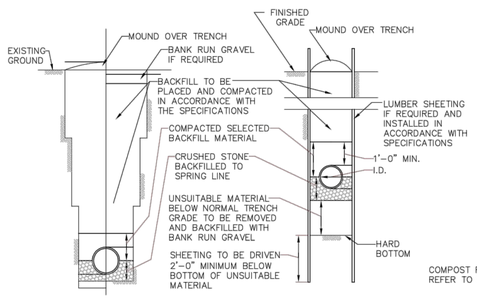

TYPICAL TRENCH SECTION STABLE GROUND

TYPICAL TRENCH SECTION UNSUITABLE MATERIAL

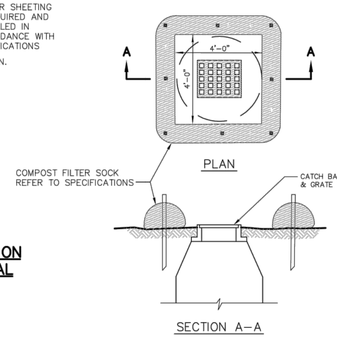

BALED HAY SILT BARRIER AROUND CATCH BASIN
N.T.S.

1 1/2:1 & 2:1 SLOPES								1 1/2 SLOPES			2:1 SLOPES		
PIPE DIA.	E	G	H	J	L	N	P	F	CU. YDS.	LBS.	F	CU. YDS.	LBS.
30"	4'-0"	4'-0"	5'-6"	3'-6"	1'-6"	2'-0"	5'-3"	3'-0"	2.60	45	4'-3"	3.16	54
36"	4'-6"	4'-3"	6'-0"	4'-0"	1'-8"	2'-3"	5'-11"	3'-6"	3.35	54	5'-0"	4.15	64
42"	5'-0"	4'-6"	6'-6"	4'-6"	1'-10"	2'-6"	6'-6"	4'-0"	4.20	59	5'-9"	5.25	70
48"	5'-6"	4'-9"	7'-0"	5'-0"	2'-0"	2'-9"	7'-2"	4'-6"	5.19	65	6'-6"	6.50	83
54"	6'-0"	5'-0"	7'-6"	5'-6"	2'-2"	3'-0"	7'-10"	5'-0"	6.26	73	7'-3"	7.88	93
60"	6'-6"	5'-3"	8'-0"	6'-0"	2'-4"	3'-4"	8'-5"	5'-6"	7.43	85	8'-0"	9.37	106
72"	7'-6"	5'-9"	9'-0"	7'-0"	2'-8"	3'-9"	9'-9"	6'-6"	10.25	98	9'-6"	12.99	128
84"	8'-6"	6'-3"	10'-0"	8'-0"	3'-0"	4'-3"	11'-0"	7'-6"	13.49	120	11'-0"	17.32	154

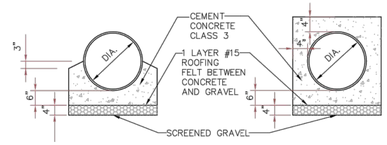

DETAIL CONCRETE CRADLE

DETAIL CONCRETE ENCASEMENT

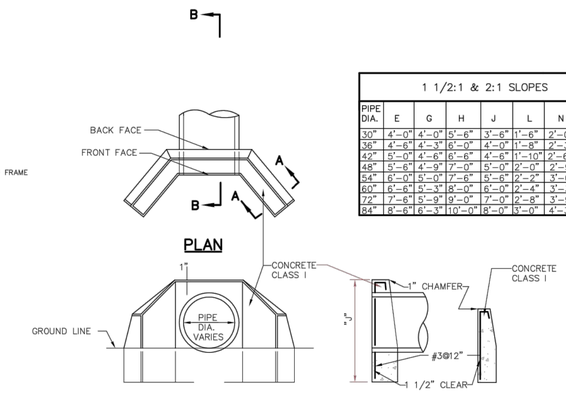

CONCRETE HEADWALL DETAILS FOR 30" TO 84" PIPE CULVERTS

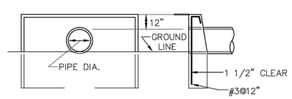

CONCRETE HEADWALL DETAILS FOR 8" TO 30" PIPE CULVERTS

PIPE DIA.	1 1/2:1 SLOPE			2:1 SLOPE		
	L	CU.YDS.	LBS	L	CU.YDS.	LBS.
8"	4'-2"	0.77	15	5'-10"	1.08	21
10"	4'-10"	0.92	20	6'-8"	1.28	23
12"	5'-6"	1.08	21	7'-6"	1.49	29
15"	6'-6"	1.34	24	8'-9"	1.82	32
18"	7'-6"	1.61	30	10'-0"	2.18	39
21"	8'-8"	1.95	34	11'-6"	2.62	43
24"	9'-3"	2.16	35	12'-6"	2.97	50
30"	10'-6"	2.63	44	15'-6"	3.86	62
	Q=4 INCHES			Q=6 INCHES		

NOTES:

1. ALL CONCRETE CORNERS SHALL BE CHAMFERED
2. ALL CONCRETE SHALL BE 3000 PSI

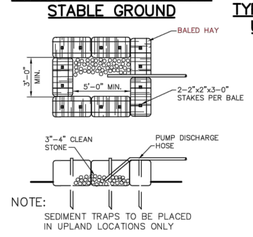

SEDIMENT CONTROL TRAP
N.T.S.

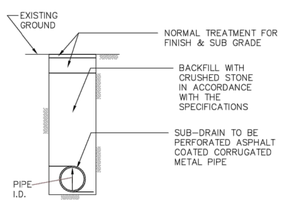

SUB-DRAIN DETAIL

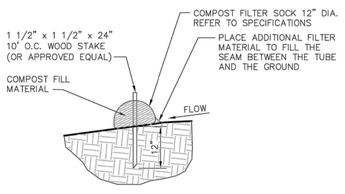

SEDIMENTATION BARRIER

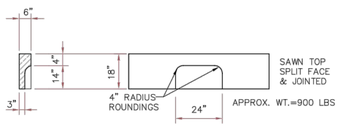

GRANITE CURB INLET DETAILS

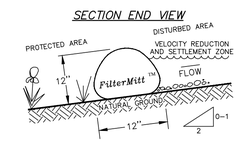

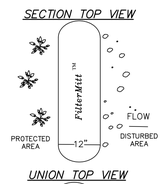

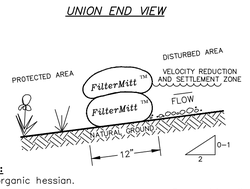

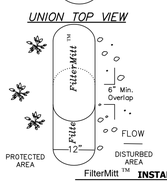

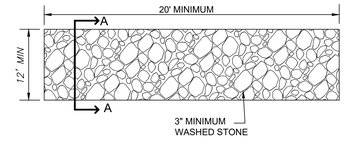

PLAN VIEW

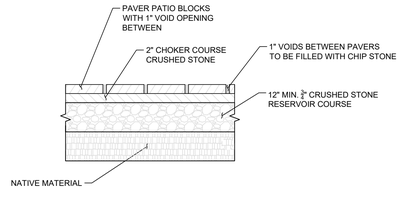

PROPOSED POROUS PAVER PATIO DETAIL
(NOT TO SCALE)

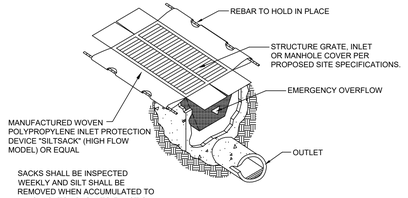

SILT SAC
(NOT TO SCALE)

***FilterMitt*™ COMPONENTS:**

OUTSIDE CASING: 100% organic hessian.

FILLER INGREDIENT: *FiberRoot Mulch*™

- A blend of coarse and fine compost and shredded wood. Particle sizes: 100% passing a 3" screen; 90-100% passing a 1" screen;
- 70-100% passing a 0.75" screen; 30-75% passing a 0.25" screen.
  Weight: Approx. 310 lbs./cu.yd.
  (Ave. 11.5 lbs./l.f.)
-

For more information visit:
www.groundscapesexpress.com or contact us at:
Groundscapes Express, Inc.
P.O. Box 737
Wrentham, MA 02093 (508) 384-7140

FILTERMITT 2:1 SLOPES OR LESS

FilterMitt ™ **INSTALLATION:**

With the newest technology and equipment, sections can be constructed on site in lengths from 1' to 100'.

Sections can also be delivered to the site in lengths from 1' to 8'.

The flexibility of allows it to conform to any contour or terrain while holding a slightly round shape at 8" high by 8" wide.

Where section ends meet, there shall be an overlap of 6" or greater.

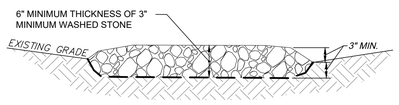

SECTION A-A
CONSTRUCTION ENTRANCE

NOT TO SCALE

LINC COLE LANE
69 PLEASANT STREET
LEXINGTON, MA

DRAWN BY:
DATE: 3-30-2022
CHECKED BY:
PROJECT No: 21-12

REVISIONS

DATE	BY	DESCRIPTION
5-23-2022		NO REVISIONS TO THIS SHEET
7-21-2022		NO REVISIONS TO THIS SHEET
8-1-2022		NO REVISIONS TO THIS SHEET
8-24-2022	MJN	REVISIONS PER TOWN COMMENTS

COMMONWEALTH OF MASSACHUSETTS
MICHAEL J. NOVAK
No. 50696
REGISTERED PROFESSIONAL ENGINEER

PATRIOT Engineering
35 BEDFORD STREET, SUITE 4
LEXINGTON, MASSACHUSETTS 02420
T.: (978) 726-2654
www.patriot-eng.com

SITE DETAILS
LOCATED IN
LEXINGTON, MA
(MIDDLESEX COUNTY)
PREPARED FOR
SHELDON CORP.

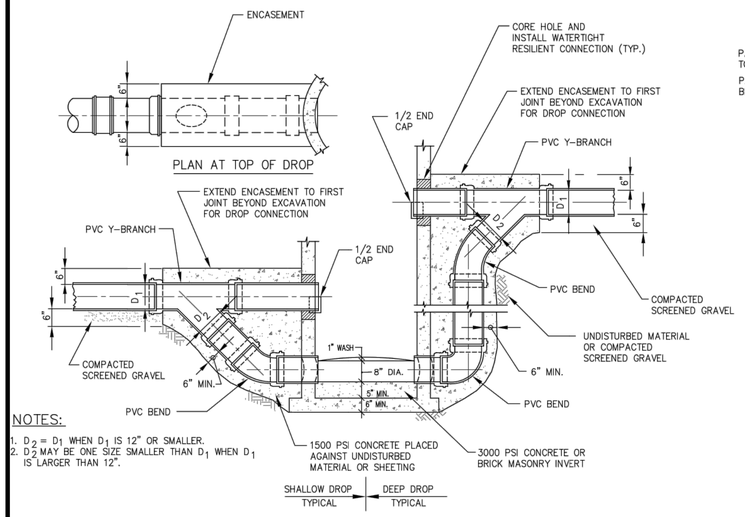

NOTES:

1. $D_2 = D_1$ WHEN D_1 IS 12" OR SMALLER.
2. D_2 MAY BE ONE SIZE SMALLER THAN D_1 WHEN D_1 IS LARGER THAN 12".

DROP INLETS FOR PVC PIPE SEWERS

NOT TO SCALE
2-1.4.1 (REV. 03-15-95)

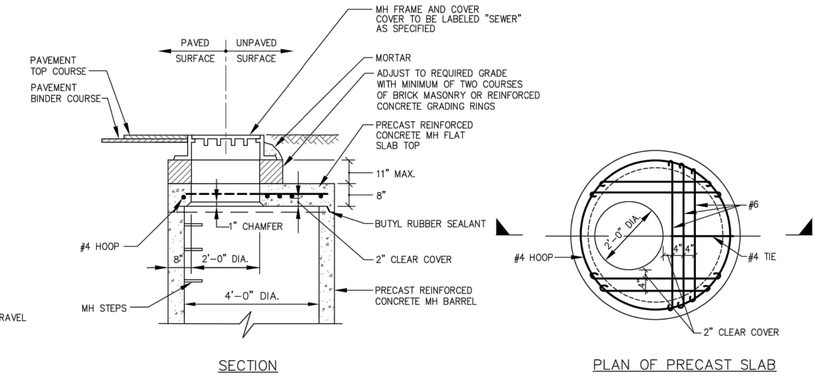

PRECAST FLAT SLAB TOP FOR SHALLOW MANHOLE

NOT TO SCALE
2-1.5.43 (REV. 03-15-95)

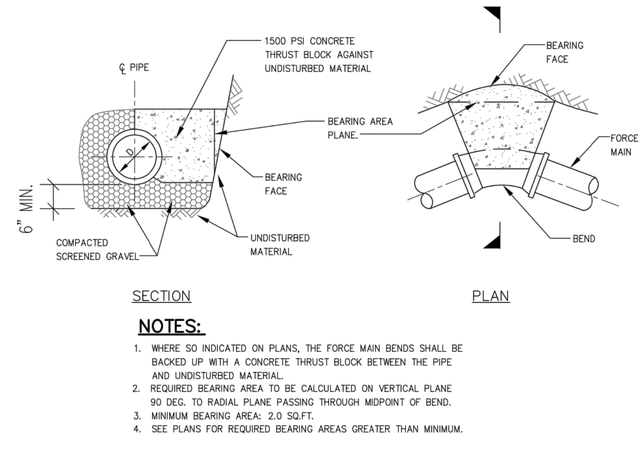

NOTES:

1. WHERE SO INDICATED ON PLANS, THE FORCE MAIN BENDS SHALL BE BACKED UP WITH A CONCRETE THRUST BLOCK BETWEEN THE PIPE AND UNDISTURBED MATERIAL.
2. REQUIRED BEARING AREA TO BE CALCULATED ON VERTICAL PLANE 90 DEG. TO RADIAL PLANE PASSING THROUGH MIDPOINT OF BEND.
3. MINIMUM BEARING AREA: 2.0 SQ.FT.
4. SEE PLANS FOR REQUIRED BEARING AREAS GREATER THAN MINIMUM.

FORCE MAIN THRUST BLOCK

NOT TO SCALE
2-1.6.1 (REV. 03-15-95)

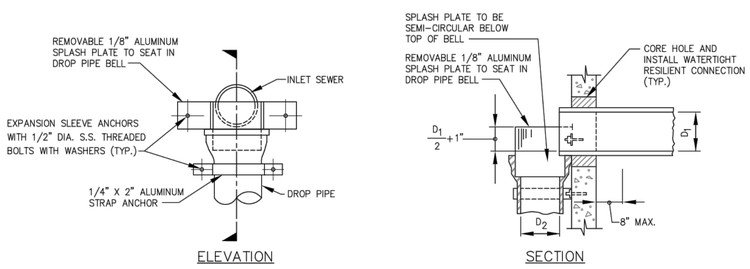

ALUMINUM SPLASH PLATE DETAIL

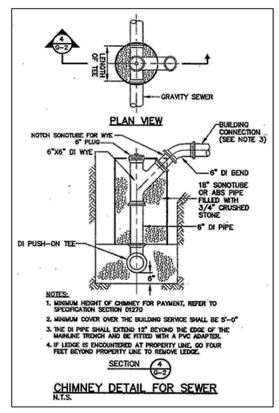

TYPICAL CHIMNEY DETAIL

NO SCALE

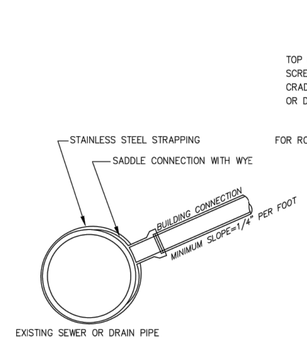

NOTES:

1. FULL PVC OR IRON SADDLE MAY BE USED TO CONNECT TO EXISTING PVC, CLAY, CONCRETE OR IRON PIPE.
2. SADDLES MUST HAVE RUBBER GASKETS AND SHALL BE TIGHTENED WITH STRAPS. SADDLES WILL NOT BE CEMENT ONTO THE PIPE.
3. FULL WYE CONNECTION FITTINGS MAY BE USED.
4. PIPE SHALL BE CUT TO CONFORM TO THE OPENING IN THE SADDLE.
5. CONNECTIONS DIRECTLY INTO THE EXISTING PIPE WITHOUT A SADDLE OR A FULL WYE FITTING ARE NOT ALLOWED.

SEWER SERVICE SADDLE CONNECTION

NO SCALE

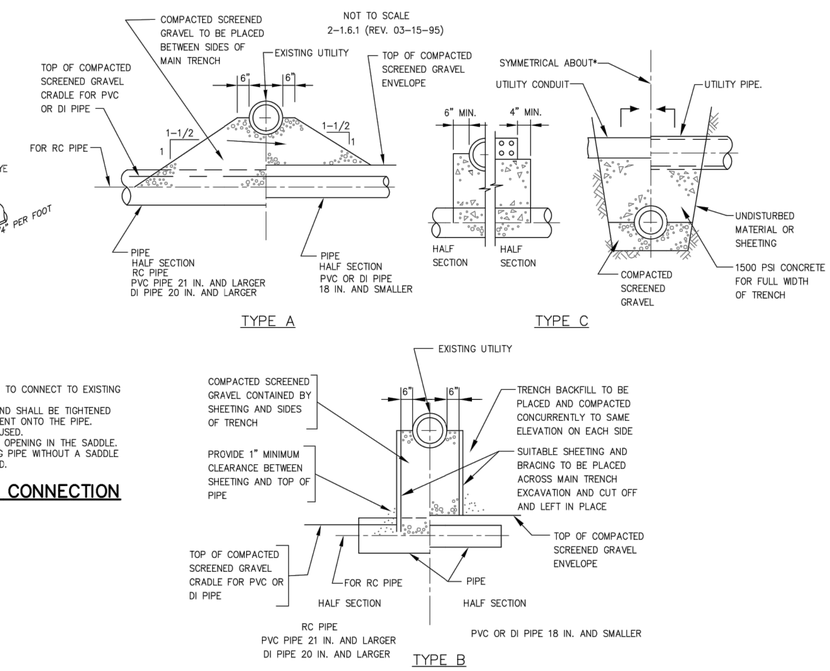

TYPICAL SUPPORTS FOR UTILITIES

NOT TO SCALE
2-1.8 (REV. 03-15-95)

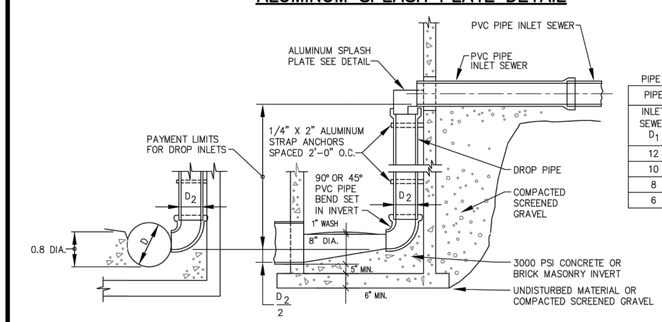

PIPE SIZE TABLE

PIPE SIZES (IN)	
INLET SEWER D_1	DROP PIPE D_2
12	10
10	8
8	8
6	6

INSIDE DROP INLETS FOR PVC PIPE SEWERS 12 INCH DIAMETER AND SMALLER

NOT TO SCALE
2-1.4.3 (REV. 03-15-95)

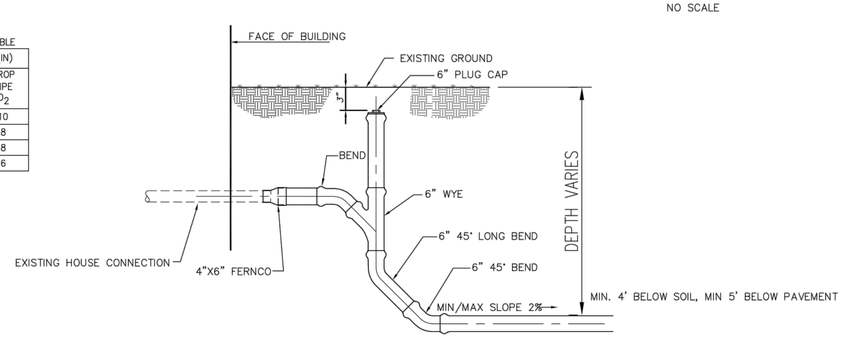

CLEAN OUT RISER FOR SHALLOW BUILDING CONNECTIONS

NO SCALE

NOT TO SCALE

LINC COLE LANE
69 PLEASANT STREET
LEXINGTON, MA

DRAWN BY:
CHECKED BY:
DATE: 3-30-2022
PROJECT No: 21-12

REVISIONS

DATE	BY	DESCRIPTION
5-23-2022		NO REVISIONS TO THIS SHEET
7-21-2022		NO REVISIONS TO THIS SHEET
8-1-2022		NO REVISIONS TO THIS SHEET
8-24-2022	MJN	REVISIONS PER TOWN COMMENTS

COMMONWEALTH OF MASSACHUSETTS
MICHAEL J. NOVAK
No. 50696
PROFESSIONAL ENGINEER

PATRIOT Engineering
35 BEDFORD STREET, SUITE 4
LEXINGTON, MASSACHUSETTS 02420
T.: (978) 726-2654
www.patriot-eng.com

SITE DETAILS
LOCATED IN
LEXINGTON, MA
(MIDDLESEX COUNTY)
PREPARED FOR
SHELDON CORP.

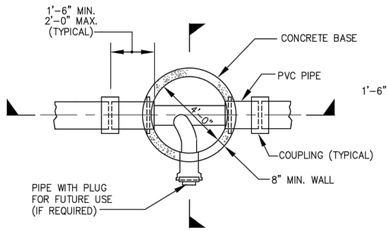

PLAN

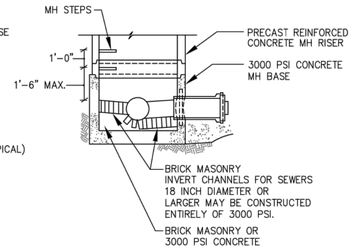

SECTION

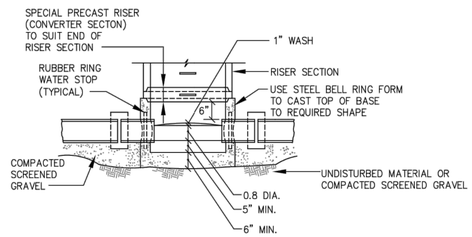

SECTION

CAST-IN-PLACE CONCRETE BASE FOR PVC SEWERS

NOT TO SCALE
2-1.5.4 (REV. 03-15-95)

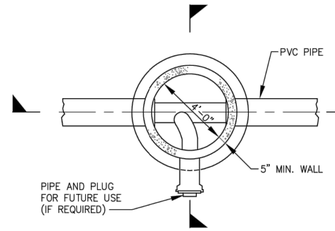

PLAN

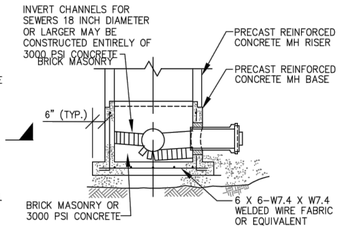

SECTION

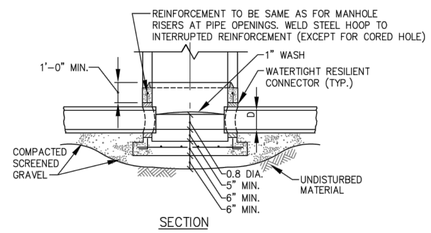

SECTION

4'-0" PRECAST REINFORCED CONCRETE MANHOLE BASE FOR PVC SEWERS AND DRAINS

NOT TO SCALE
2-1.5.14 (REV. 03-15-95)

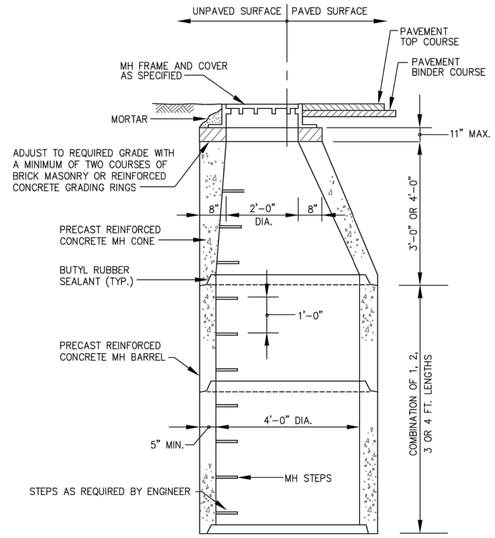

MANHOLE RISER WITH ECCENTRIC CONE TOP

NOT TO SCALE
2-1.5.41 (REV. 03-15-95)

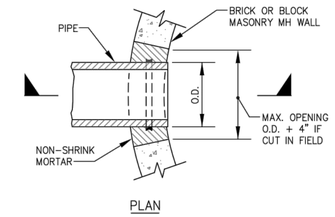

PLAN

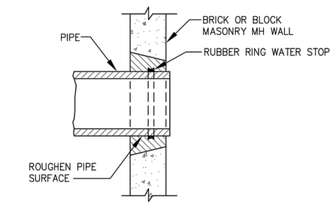

SECTION

NON-SHRINK MORTAR JOINTS FOR CONNECTING PIPES TO BRICK OR BLOCK MASONRY MANHOLES

NOT TO SCALE
2-1.5.62 (REV. 4-5-96)

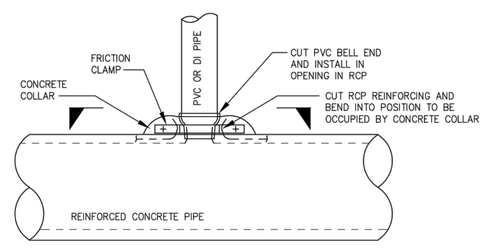

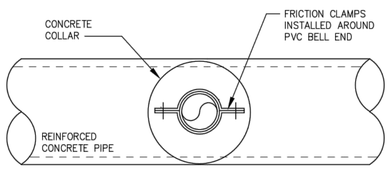

SECTION

T-BRANCH FOR BUILDING OR CHIMNEY CONNECTION IN RC PIPE (PVC OR DI PIPE BRANCH)

NTS
2-1.2.15 (REV. 08-17-95)

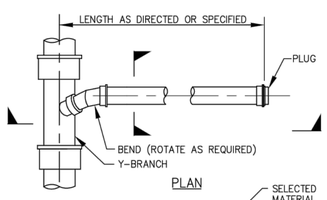

PLAN

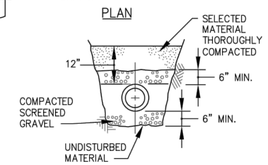

SECTION

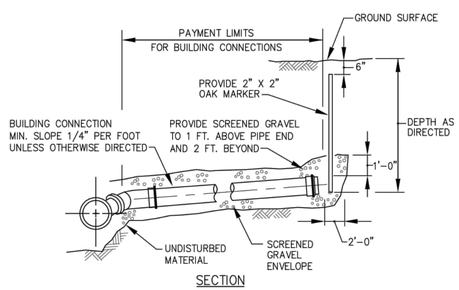

SECTION

BUILDING CONNECTION FOR DI OR PVC PIPE

NOT TO SCALE
2-1.2.1 (REV. 03-15-95)

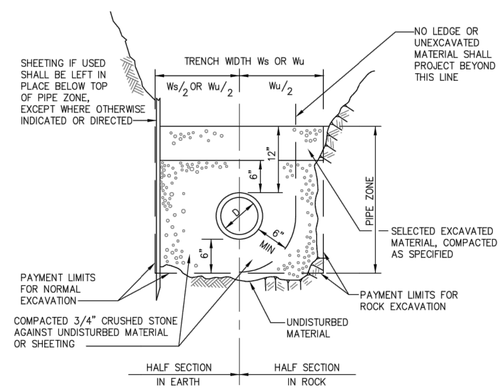

1. PIPE TRENCHES MAY BE EXCAVATED WIDER THAN TRENCH WIDTH Ws (SHEETED) OR Wu (UNSHEETED) ABOVE THE TOP OF PIPE ZONE.
2. TRENCHES SHALL NOT BE EXCAVATED BEYOND THE TRENCH WIDTH Wu BELOW THE TOP OF PIPE ZONE.
3. SHEETING MUST BE USED IF EXCAVATION AND BACKFILL, BELOW NORMAL DEPTH, IS REQUIRED. SHEETING SHALL BE LEFT IN PLACE BELOW A LINE 1'-0" ABOVE THE TOP OF PIPE.
4. ALL ROCK WITHIN 3'-0" HORIZONTALLY OF THE ENDS OF BUILDING CONNECTIONS, BRANCHES OR STUBS AND DOWN TO A HORIZONTAL PLANE 6" BELOW THE BOTTOMS OF SUCH CONNECTIONS, BRANCHES OR STUBS, SHALL BE EXCAVATED.

TRENCH WIDTH Ws OR Wu

NOMINAL PIPE DIAMETER D	DEPTH OF PIPE INVERT BELOW GROUND SURFACE	
	0 TO 12'	12' TO 20'
24" AND SMALLER	5'-0"	7'-0"
OVER 24"	D + 3'-0"	D + 5'-0"

TRENCH SECTION FOR PVC PIPE

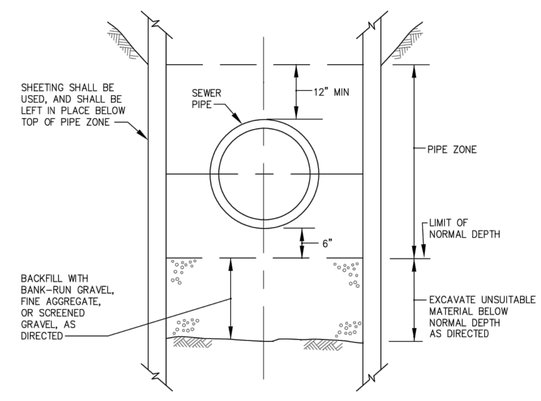

DETAILS NOT SHOWN ARE
SAME AS TRENCH SECTIONS
SHOWN ELSEWHERE

TRENCH SECTION IN UNSUITABLE MATERIAL

NOT TO SCALE
2-1.1.21 (REV. 03-15-95)

NOT TO SCALE

LINC COLE LANE
69 PLEASANT STREET
LEXINGTON, MA

DRAWN BY:
DATE: 3-30-2022
CHECKED BY:
PROJECT No: 21-12

REVISIONS

DATE	BY	DESCRIPTION
5-23-2022		NO REVISIONS TO THIS SHEET
7-21-2022		NO REVISIONS TO THIS SHEET
8-1-2022		NO REVISIONS TO THIS SHEET
8-24-2022	MJN	REVISIONS PER TOWN COMMENTS

COMMONWEALTH OF MASSACHUSETTS
MICHAEL J. NOVAK
CIVIL
No. 50696
REGISTERED PROFESSIONAL ENGINEER

PATRIOT Engineering
35 BEDFORD STREET, SUITE 4
LEXINGTON, MASSACHUSETTS 02420
T: (978) 726-2654
www.patriot-eng.com

SITE DETAILS
LOCATED IN
LEXINGTON, MA
(MIDDLESEX COUNTY)
PREPARED FOR
SHELDON CORP.

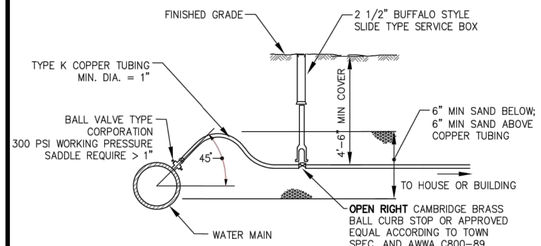

NOTES:

1. A 10' HORIZONTAL SEPARATION MUST BE MAINTAINED FROM THE SEWER SERVICE UNLESS OTHERWISE AUTHORIZED BY THE ENGINEERING DIVISION.
2. FOR SERVICE RENEWALS, TUBING SHALL BE REPLACED TO THE PROPERTY LINE UNLESS OTHERWISE AUTHORIZED BY THE ENGINEERING DIVISION.
3. WHERE AN EXISTING SERVICE IS BEING REPLACED TO THE MAIN, THE OLD SERVICE SHALL BE CAPPED AT THE CORPORATION.
4. THE WATER AND SEWER DIVISION MUST BE NOTIFIED IF LEAD OR STEEL SERVICES ARE ENCOUNTERED.
5. SERVICE TAPS SHALL BE PERFORMED BY CONTRACTOR OR SUBCONTRACTOR AND ARE SUBJECT TO APPROVAL BY THE WATER DIVISION.
6. SERVICE TAPS GREATER THAN 1" REQUIRE A SADDLE AND ARE SUBJECT TO THE APPROVAL OF THE ENGINEERING DIVISION.
7. USE QUICK STYLE COMPRESSION CONNECTIONS FOR ALL SERVICE BRASS.
8. FOR 1" CONNECTIONS TO EXIST. 3/4" CURB STOP CONNECT ADAPTER DIRECTLY TO CURB STOP. MOST EXISTING CURB STOPS REQUIRE 3/4" X 1" FEMALE ADAPTERS FOR NEW ENGLAND STYLE THREADS.
9. ALL CONNECTIONS TO EXIST. CURB STOPS SHALL REPLACE SERVICE BOXES IF NOT BUFFALO STYLE.
10. WATER SERVICE SHALL INCLUDE A BALL VALVE WITH COMPRESSION FITTING JUST BEFORE METER.

WATER SERVICE CONNECTION (1" MIN TO 2" MAX)

NTS

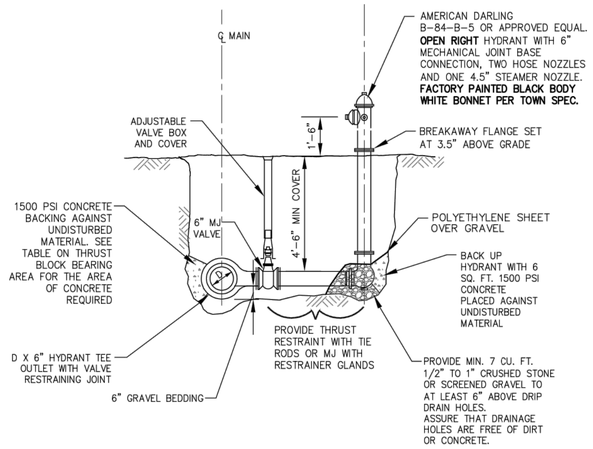

TYPICAL HYDRANT ASSEMBLY WITH DRAIN

NTS

NOTES:

1. SIZES 3" THROUGH 24" ARE LISTED BY UNDERWRITER'S LABORATORIES, INC. CATEGORY HJKF FOR USE ON DUCTILE IRON PIPE. THE LISTING FILE NUMBER IS EX2836. SIZES 3" THROUGH 12" ARE FACTORY MUTUAL APPROVED.
2. GLAND AND COLLAR BOLTS ARE MADE OF DUCTILE IRON CONFORMING TO ASTM A536-80. WEDGES ARE MADE OF DUCTILE IRON HEAT TREATED TO A MINIMUM BRINELL HARDNESS OF 370.
3. GLAND CONFORMS TO THE APPLICABLE REQUIREMENTS OF ANSI/AWWA A21.11/C111 AND ANSI\AWWA C153/A21.53 OF THE LATEST REVISION.
4. FOR TEST PRESSURES ABOVE THE RATED PRESSURES SHOWN, CONSULT THE ENGINEERING DEPARTMENT OF EBAA IRON INC. FOR RECOMMENDATIONS. EBAA-SEAL GASKETS ARE PROVIDED WITH THE 30" THROUGH 48" MEGALUGS. ALSO PROVIDED WITH THE 42" AND 48" SIZES ARE EXTRA LENGTH T-BOLTS. THE GASKETS AND BOLTS ARE PROVIDED TO FACILITATE EASIER ASSEMBLY OF THE MECHANICAL JOINT AND ARE REQUIRED ON THE ABOVE REFERENCED SIZES TO OBTAIN THE LISTED PRESSURE RATINGS WITH A 2:1 SAFETY FACTOR.

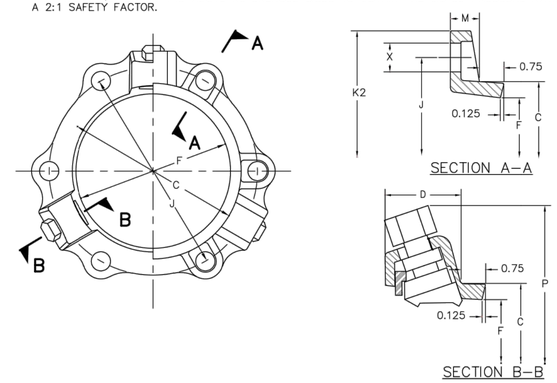

SERIES	PRESSURE RATING	C	D	F	J	M	X	NO. OF WEDGES	NO. OF BOLTS	P	P (W/ NUTS TWISTED OFF)	K2
1103	350	4.84	2.27	4.06	6.19	0.62	3/4	2	4	9.36	9.06	7.69
1104	350	5.92	2.27	4.90	7.50	0.75	7/8	2	4	10.20	9.90	9.12
1106	350	8.02	2.27	7.00	9.50	0.88	7/8	3	6	12.30	12.00	11.12
1108	350	10.17	2.31	9.15	11.75	1.00	7/8	4	6	14.45	14.15	13.37
1110	350	12.22	2.37	11.20	14.00	1.00	7/8	6	8	16.50	16.20	15.62
1112	350	14.32	2.37	13.30	16.25	1.25	7/8	8	8	18.60	18.30	17.88
1114	350	16.40	2.69	15.44	18.75	1.50	7/8	10	10	20.64	20.94	20.25
1116	350	18.50	2.69	17.54	21.00	1.56	7/8	12	12	22.60	22.90	22.50
1118	250	20.60	2.69	19.64	23.25	1.63	7/8	12	12	24.70	25.00	24.75
1120	250	22.70	2.69	21.74	25.50	1.69	7/8	14	14	26.80	27.10	27.00
1124	250	26.90	3.20	25.94	30.00	1.81	7/8	16	16	32.94	32.64	31.50
1130	250	33.29	3.20	32.17	36.88	2.25	1 1/8	20	20	39.17	38.87	39.12
1136	250	39.59	3.20	38.47	43.75	2.25	1 1/8	24	24	45.47	45.17	46.00
1142	250	45.79	4.56	44.67	50.62	3.88	1 3/8	28	28	55.87	55.57	53.48
1148	250	52.09	4.56	50.97	57.50	3.88	1 3/8	32	32	62.17	61.87	60.36

MEGALUG DETAIL

N.T.S.

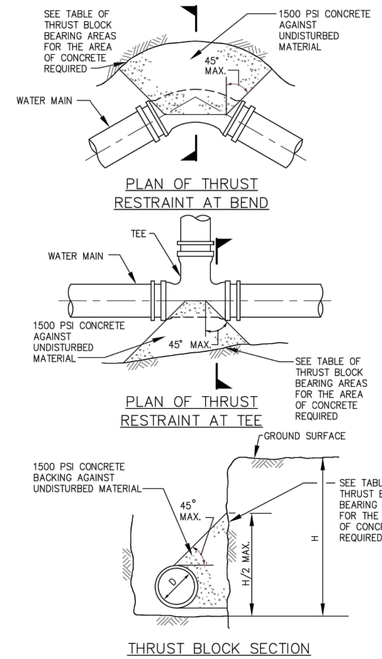

THRUST RESTRAINT AT FITTINGS

NTS

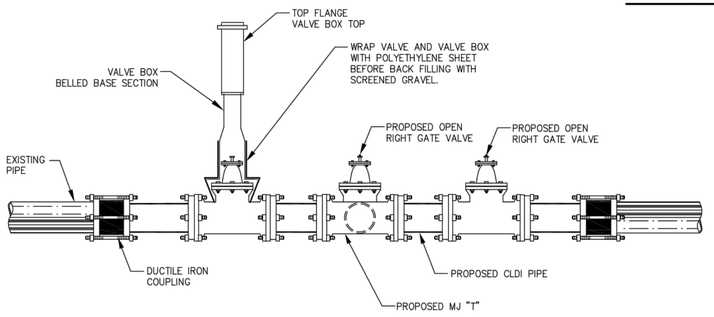

ELEVATION

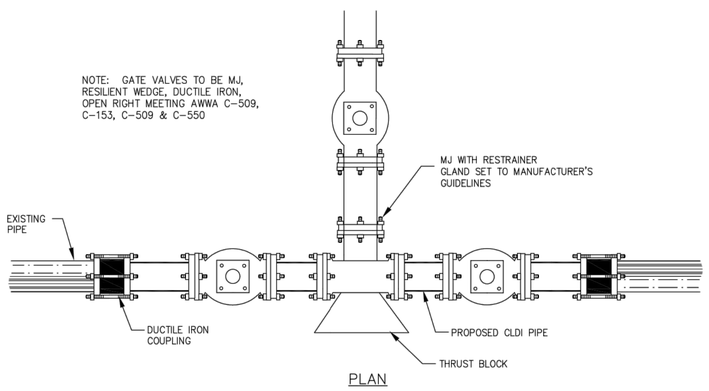

PLAN

TRIPLE GATE CUT IN WATER MAIN CONNECTION

NTS

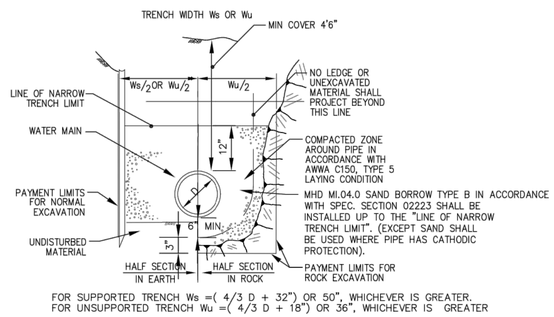

FOR SUPPORTED TRENCH Ws =(4/3 D + 32") OR 50", WHICHEVER IS GREATER.
FOR UNSUPPORTED TRENCH Wu =(4/3 D + 18") OR 36", WHICHEVER IS GREATER

NOTES:

1. TRENCHES MAY BE EXCAVATED WIDER THAN TRENCH WIDTH Ws ABOVE THE "LINE OF NARROW TRENCH LIMIT".
2. BELOW THE "LINE OF NARROW TRENCH LIMIT" THE TRENCH SHALL NOT BE EXCAVATED BEYOND THE TRENCH WIDTH Ws.
3. SHEETING, IF USED, IN ALL CASES SHALL BE LEFT IN PLACE BELOW A LINE 1'-0" ABOVE THE TOP OF THE PIPE, UNLESS OTHERWISE INDICATED OR DIRECTED.
4. "COVER" AT ANY POINT SHALL BE DEFINED AS THE VERTICAL DISTANCE FROM THE UPPERMOST POINT OF THE PIPE TO A LINE WHICH CONNECTS THE SURFACE OF UNDISTURBED GROUND AT EITHER SIDE OF THE TRENCH AND IS AT RIGHT ANGLES TO THE DIRECTION OF THE PIPE.
5. WHERE FUTURE EXTENSION OF A PLUGGED PIPE OR A PLUGGED BRANCH WILL ENTAIL ROCK EXCAVATION, TRENCH EXCAVATION IN ROCK SHALL BE EXTENDED FOR A DISTANCE OF 3'-0" BEYOND THE PLUG.
6. BANK RUN GRAVEL OR EXCAVATED MATERIAL THAT MEETS SPEC. SECTION 02224 SHALL BE INSTALLED ABOVE THE LINE OF NARROW TRENCH LIMIT.
7. WHERE SPECIFIED, CONTROLLED DENSITY FILL WILL BE USED FROM TOP OF SCREENED GRAVEL TO BOTTOM OF BITUMINOUS PAVEMENT.

WATER MAIN TRENCH SECTION

NTS

BEARING AREA FOR VARIOUS DIAMETERS						
FITTING	4"	6"	8"	10"	12"	16"
1/32 BEND (11 1/4°)	2 S.F.	2 S.F.	2 S.F.	2 S.F.	3 S.F.	5 S.F.
1/16 BEND (22 1/2°)	2 S.F.	2 S.F.	3 S.F.	3 S.F.	4 S.F.	5 S.F.
1/8 BEND (45°)	2 S.F.	2 S.F.	3 S.F.	5 S.F.	7 S.F.	12 S.F.
1/4 BEND (90°)	3 S.F.	3 S.F.	6 S.F.	9 S.F.	12 S.F.	21 S.F.
TEE/PLUG	2 S.F.	3 S.F.	4 S.F.	6 S.F.	9 S.F.	16 S.F.

NOTES:

1. ALL ELBOWS, BENDS, AND CAPS SHALL BE BRACED WITH CONCRETE THRUST BLOCKS. JOINTS SHALL NOT BE ENCASED IN CONCRETE.
2. BEARING AREA IS AREA OF CONCRETE IN CONTACT WITH WALL OF TRENCH (H X L).
3. HEIGHT AND LENGTH AS REQUIRED TO OBTAIN BEARING AREA SHOWN IN THE TABLE W/ H APPROX. 1/2 L.
4. THRUST BLOCK SIZING BASED ON 150 PSI WATER PRESSURE AND 2000 PSI SOIL BEARING CAPACITY.

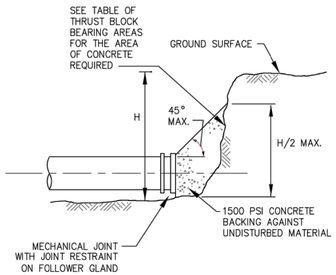

THRUST RESTRAINT AT PLUG

NTS

NOT TO SCALE

LINC COLE LANE
69 PLEASANT STREET
LEXINGTON, MA

DATE: 3-30-2022
PROJECT No: 21-12
DRAWN BY:
CHECKED BY:

REVISIONS

DATE	BY	DESCRIPTION
5-23-2022		NO REVISIONS TO THIS SHEET
7-21-2022		NO REVISIONS TO THIS SHEET
8-1-2022		NO REVISIONS TO THIS SHEET
8-24-2022	MJN	REVISIONS PER TOWN COMMENTS

COMMONWEALTH OF MASSACHUSETTS MICHAEL J. NOVAK No. 50696 REGISTERED PROFESSIONAL ENGINEER

PATRIOT Engineering
35 BEDFORD STREET, SUITE 4
LEXINGTON, MASSACHUSETTS 02420
T: (978) 726-2654
www.patriot-eng.com

SITE DETAILS
LOCATED IN
LEXINGTON, MA
(MIDDLESEX COUNTY)
PREPARED FOR
SHELDON CORP.

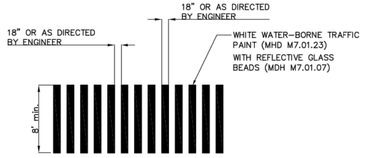

CROSSWALK ALL LOCATIONS

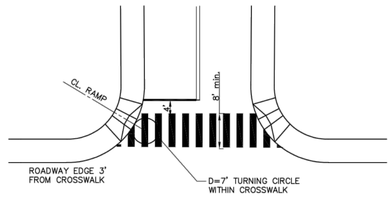

DETAIL~FOR CROSSWALK ALL LOCATIONS

NOTES:

1. WHERE PROVIDED, STOP LINES SHOULD BE PLACED NO LESS THAN 4 FEET BEHIND AN ADJACENT CROSSWALK LINE.
2. MID-BLOCK CROSSWALKS SHALL NOT BE INSTALLED IN AREAS WITH THE SIGHT DISTANCE LESS THAN THAT SHOWN IN THE TABLE BELOW.

DESIGN SPEED	SIGHT DISTANCE
30	200
40	275
50	375
60	525
70	625

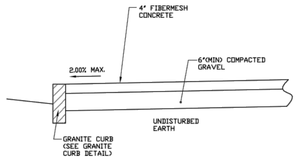

CONCRETE SIDEWALK

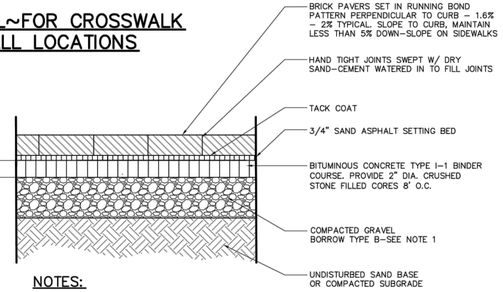

NOTES:

1. DETAIL AS SHOWN SHALL BE USED ON TYPICAL BRICK SIDEWALKS. WHERE SHOWN ON PLANS AT LOCATIONS FOR "TREEWAY", GRAVEL BORROW SHALL BE SUBSTITUTED WITH COMPACTED DENSE GRADED CRUSHED STONE AND 2' DEPTH OF SAND BASED.

BRICK SIDEWALK PAVING

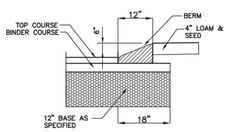

BIT. CONC. BERM

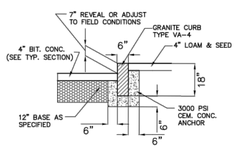

GRANITE CURB TYPE VA-4

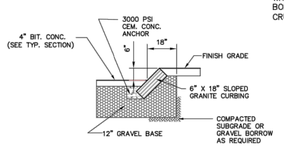

SLOPED GRANITE CURB DETAIL

PLAN VIEW

TYPICAL CURB RETURN DETAIL

DRIVEWAY SECTION

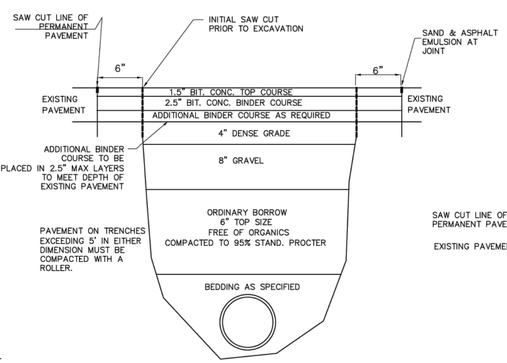

TRENCH RESTORATION

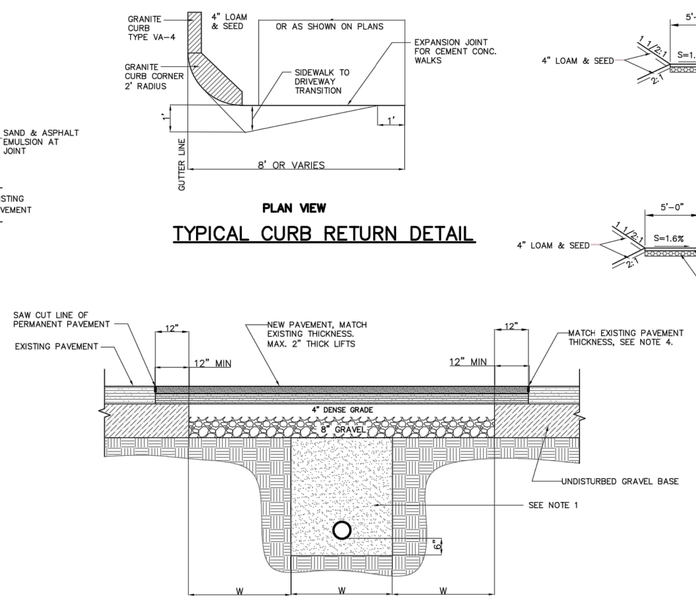

TYPICAL DETAIL TRENCH RESTORATION FOR MORATORIUM STREETS

NOTES:

1. THE TRENCH EXCAVATION AROUND THE UTILITY WILL BE BACK FILLED WITH FLOWABLE FILL OR, IN CASE OF NATURAL GAS SERVICE, WITH GRAVEL COMPACTED TO 95% DENSITY.
2. NEW GRAVEL SUB BASE WILL BE INSTALLED AND COMPACTED TO 95% DENSITY.
3. THE FINAL TRENCH PATCH WILL BE FROM CURB TO CURB, OR AS APPROVED BY THE ENGINEER.
4. PAVEMENT THICKNESS AND MATERIAL IN ACCORDANCE WITH THE TOWN OF LEXINGTON SPECIFICATIONS. APPLY HEAT BY APPROVED INFRARED METHOD TO SEAL ALL JOINTS.
5. JOINT BETWEEN EXISTING PAVEMENT AND PATCH MUST BE INFRARED.

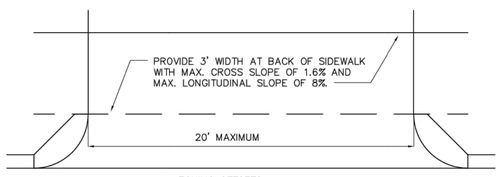

ZONING OFFSETS

ZONING DISTRICT	DISTANCE FROM STREET INTERSECTION	DISTANCE FROM LOT LINE	WALL OF PRINCIPAL BUILDING
RS,RO,RT	25	5	5
RD,RM	25	8	5
CRO,CLO,CM	50	10	5
CRS,CS,CB,CN	10	NO REQUIREMENT	5

MAXIMUM DRIVEWAY GRADE = 12%

DRIVEWAY PLAN–RESIDENTIAL

NOTE:

NUMBER OF DRIVEWAYS PER LOT LINE IS LIMITED TO TWO. ZONING BY LAW SECTION 5.1.10.2

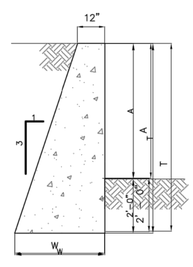

LOW RETAINING WALL

NOTES

1. CLASS I CEMENT CONC. TO BE USED
2. EXPANSION JOINTS TO BE PLACED 90' O.C. MAX. WITH INTERMIDIATE CONSTRUCTION JOINTS 30' O.C.
3. ALL CONC. DIMENSIONS SHOWN ARE MINIMUM

HEIGHT A	HEIGHT T	WIDTH W	AREA SQ. FT.	CU. YDS. PER. LIN. FT.
2'–0"	4'–0"	2'–4"	6.667	0.247
2'–6"	4'–6"	2'–6"	7.875	0.292
3'–0"	5'–0"	2'–8"	9.165	0.339
3'–6"	5'–6"	2'–10"	10.541	0.390
4'–0"	6'–0"	3'–0"	12.000	0.444
4'–6"	6'–6"	3'–2"	13.541	0.502
5'–0"	7'–0"	3'–4"	15.162	0.562

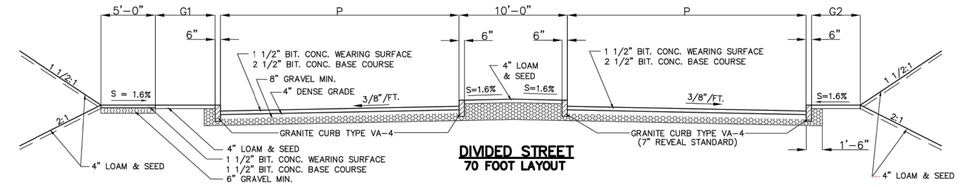

DIVIDED STREET 70 FOOT LAYOUT

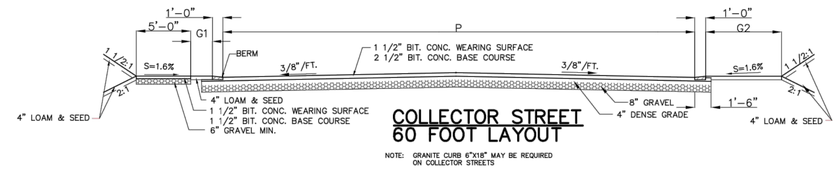

COLLECTOR STREET 60 FOOT LAYOUT

NOTE: GRANITE CURB 6"X18" MAY BE REQUIRED ON COLLECTOR STREETS

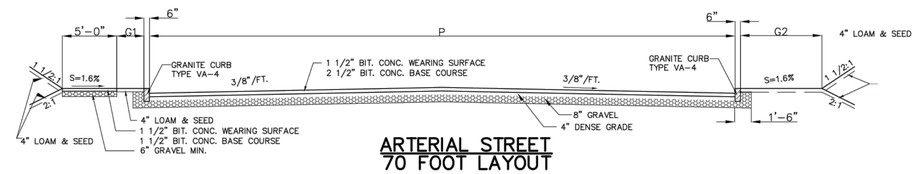

ARTERIAL STREET 70 FOOT LAYOUT

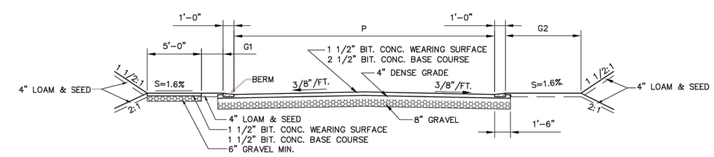

MINOR STREET 40 FOOT LAYOUT

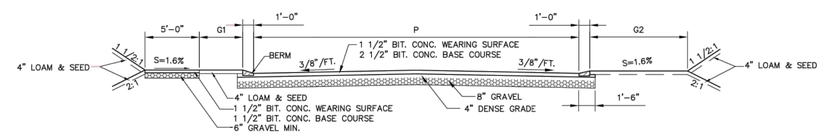

LOCAL STREET 50 FOOT LAYOUT

LAYOUT WIDTH "L"	PAVEMENT WIDTH "P"	SHOULDER WIDTH G1	SHOULDER WIDTH G2
40'	24'–0"	2'–0"	7'–0"
50'	30'–0"	4'–0"	9'–0"
60'	44'–0"	2'–0"	7'–0"
70'	54'–0"	2'–6"	7'–6"
70' (DIVIDED)	22'–0"	5'–6"	4'–6"

NOT TO SCALE

LINC COLE LANE
69 PLEASANT STREET
LEXINGTON, MA

DATE: 3-30-2022
PROJECT No: 21-12
DRAWN BY:
CHECKED BY:

REVISIONS

DATE	BY	DESCRIPTION
5-23-2022	MJN	REVISIONS PER TOWN COMMENTS
7-21-2022		NO REVISIONS TO THIS SHEET
8-1-2022		NO REVISIONS TO THIS SHEET
8-24-2022	MJN	REVISIONS PER TOWN COMMENTS

COMMONWEALTH OF MASSACHUSETTS MICHAEL J. NOVAK No. 50696 REGISTERED PROFESSIONAL ENGINEER

PATRIOT Engineering
35 BEDFORD STREET, SUITE 4
LEXINGTON, MASSACHUSETTS 02420
T: (978) 726-2654
www.patriot-eng.com

SITE DETAILS
LOCATED IN
LEXINGTON, MA
(MIDDLESEX COUNTY)
PREPARED FOR
SHELDON CORP.

ENTRANCE DETAIL

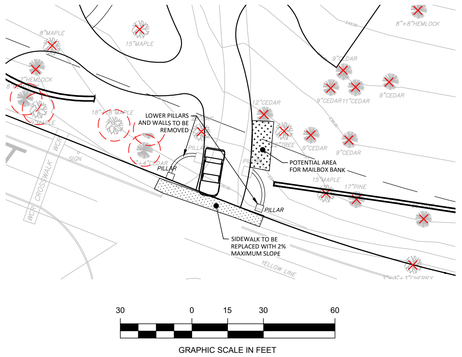

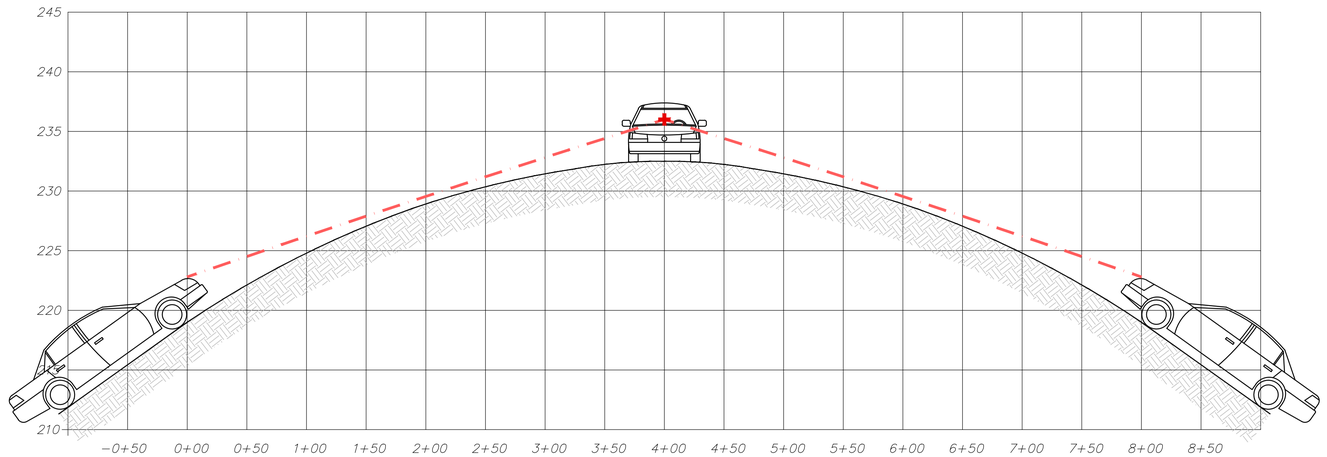

PROFILE VIEW

SCALE: 1"=6' VERT.
1"=60' HOR.

VEHICLES ABOVE ARE NOT TO HORIZONTAL SCALE

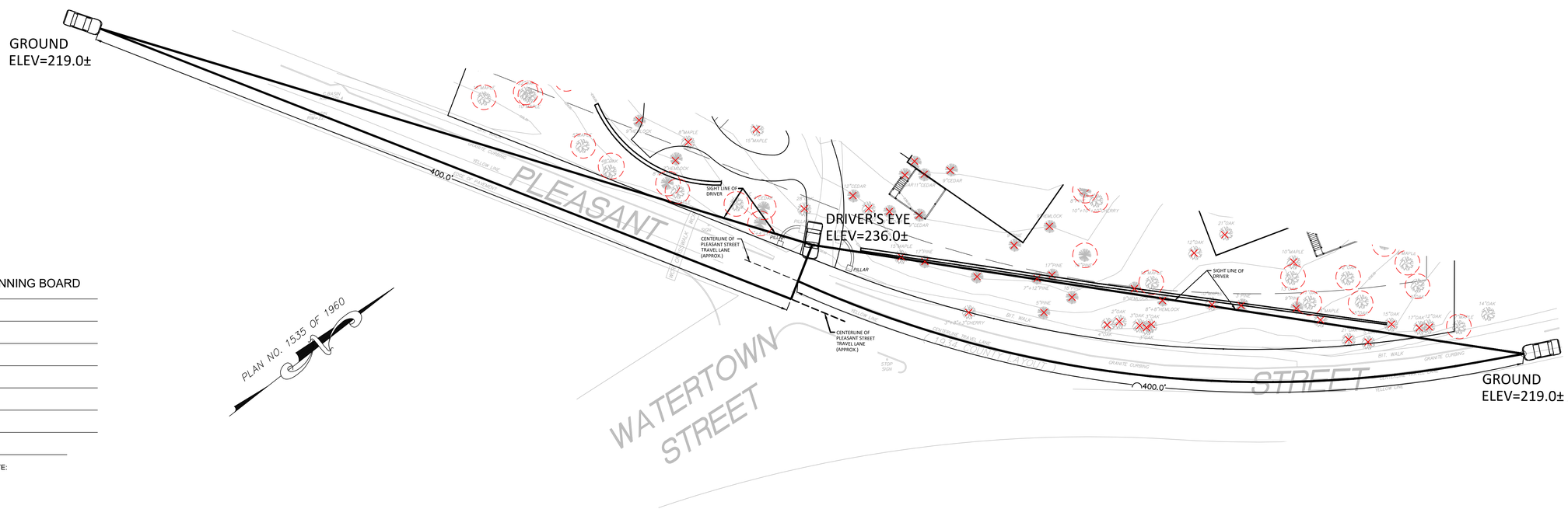

LEXINGTON PLANNING BOARD

DATE:

I, _____ CLERK OF THE TOWN OF LEXINGTON, MASSACHUSETTS HEREBY CERTIFY THAT THE NOTICE OF APPROVAL OF THIS PLAN BY THE LEXINGTON PLANNING BOARD HAS BEEN RECEIVED AND RECORDED AT THE OFFICE AND NO NOTICE OF APPEAL WAS RECEIVED DURING TWENTY DAYS NEXT AFTER SUCH RECEIPT AND RECORDED OF SAID NOTICE.

TOWN CLERK *DATE*

SIGHT LINES

30 0 15 30 60
GRAPHIC SCALE IN FEET

LINC COLE LANE
69 PLEASANT STREET
LEXINGTON, MA

DRAWN BY:
DATE: 3-30-2022
CHECKED BY:
PROJECT No: 21-12

REVISIONS

DATE	BY	DESCRIPTION
5-23-2022	MJN	REVISIONS PER TOWN COMMENTS
7-21-2022	MJN	REVISIONS PER TOWN COMMENTS
8-1-2022		NO REVISIONS TO THIS SHEET
8-24-2022	MJN	REVISIONS PER TOWN COMMENTS

COMMONWEALTH OF MASSACHUSETTS
MICHAEL J. NOVAK
CIVIL
No. 50596
REGISTERED PROFESSIONAL ENGINEER

PATRIOT Engineering
35 BEDFORD STREET, SUITE 4
LEXINGTON, MASSACHUSETTS 02420
T: (978) 726-2654
www.patriot-eng.com

SITE DETAILS
LOCATED IN
LEXINGTON, MA
(MIDDLESEX COUNTY)
PREPARED FOR
SHELDON CORP.

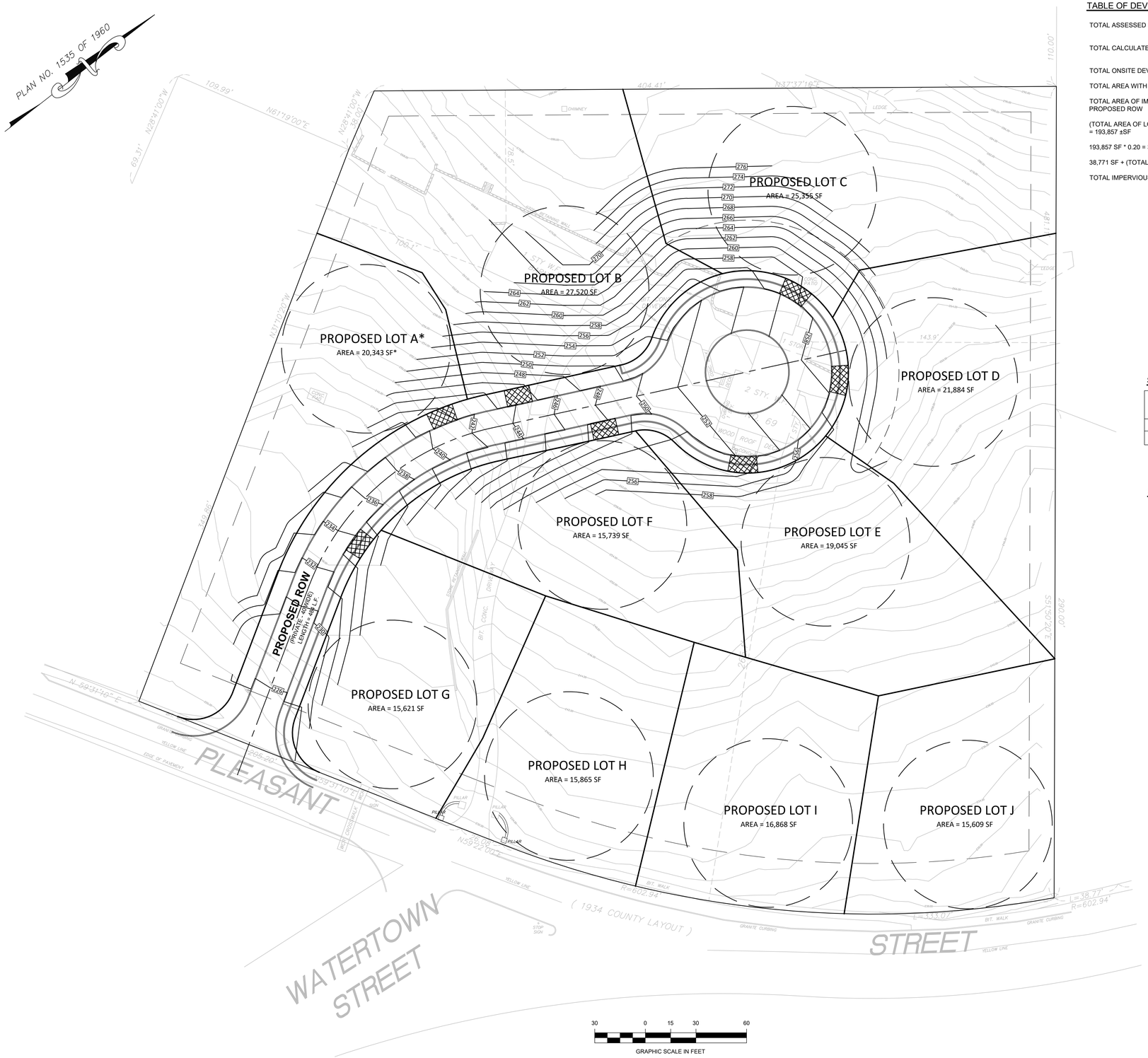

TABLE OF DEVELOPMENTAL DATA

TOTAL ASSESSED LAND AREA OF DEVELOPMENT	5.04 ±AC (MAP 14, LOT 57)
TOTAL CALCULATED LAND AREA OF DEVELOPMENT	219,349 ±SF (MAP 14, LOT 57)
TOTAL ONSITE DEVELOPABLE SITE AREA	219,349 ±SF
TOTAL AREA WITH PROPOSED ROW	25,492 ±SF
TOTAL AREA OF IMPERVIOUS SURFACES WITHIN PROPOSED ROW	17,951 ± SF

(TOTAL AREA OF LOTS IN PROOF PLAN = TOTAL CALCULATED LAND AREA OF DEVELOPMENT - TOTAL AREA WITHIN PROPOSED ROW = (219,349 - 25,492) = 193,857 ±SF

193,857 SF * 0.20 = 38,771 SF

38,771 SF + (TOTAL IMPERVIOUS AREA WITHIN ROW PROOF PLAN) = (38,771 + 17,951) = 56,722 SF

TOTAL IMPERVIOUS SURFACE AREA ALLOWABLE IN A SITE SENSITIVE DEVELOPMENT (SSD) = 56,722 SF

MINOR RESIDENTIAL STREET:

NUMBER OF DWELLING UNITS SERVED: 10 PROPOSED
WIDTH OF PROPOSED RIGHT-OF-WAY: 40' (40' MIN. REQUIRED)
MINIMUM PAVEMENT WIDTH: 20' (20' PROPOSED)
MAXIMUM GRADE: 8.0% (8.0% PROPOSED)
MAXIMUM GRADE WITHIN 75' OF INTERSECTIONS: 2.0% (2.0% PROPOSED)
PROPOSED CENTERLINE RADIUS: 150'
PROPOSED RADIUS OF RIGHT-OF-WAY ROUNDING: 25'
LENGTH OF RIGHT-OF-WAY: 484'±

SPECIAL PERMIT SUBDIVISION CALCULATIONS

TYPE OF SPECIAL PERMIT RESIDENTIAL DEVELOPMENT	MAXIMUM GROSS FLOOR AREA (SF)	NO. OF DWELLINGS	MAXIMUM AMOUNT OF IMPERVIOUS SURFACES (SF)	MAXIMUM SITE COVERAGE (SF)	MINIMUM COMMON OPEN SPACE REQUIRED (SF)
SITE SENSITIVE	76,511	10	56,722	29,078	NOT REQUIRED
PROPOSED	< 76,511	10	>56,722	< 29,078	NOT REQUIRED

GROSS FLOOR AREA (GFA) CHART SITE SENSITIVE DEVELOPMENT (SSD)

LOT #	MAX. GFA ALLOWED
LOT A*	7,500 SF
LOT B	8,953 SF
LOT C	8,606 SF
LOT D	8,051 SF
LOT E	7,597 SF
LOT F	7,068 SF
LOT G	7,049 SF
LOT H	7,088 SF
LOT I	7,248 SF
LOT J	7,047 SF
TOTAL	76,207 SF

* THE MAX AREA TO BE COMBINED WITH ABUTTER AS NOTED ON SHEET 5 OF THIS PLAN SET IS NOT TO EXCEED 1,900 SF. THE CALCULATED MAX ALLOWED GFA FOR LOT A REFLECTS THE REMOVAL OF 1,900 SF OF LOT AREA FROM LOT A

TABLE OF DIMENSIONAL REQUIREMENTS

ZONE: RS

ITEM	REQUIREMENT
MIN LOT AREA	15,500 SF
MIN FRONTAGE	125'
BUILDING SETBACKS	
FRONT YARD	30'
SIDE/REAR YARD	15'

LEGEND:

———	APPROXIMATE EXISTING PROPERTY LINES
296	PROPOSED CONTOUR
—— – ——	PROPOSED CENTERLINE
R=	RADIUS
TYP	TYPICAL
PEOP	PROPOSED EDGE OF PAVEMENT
SF	SQUARE FEET
ROW	RIGHT OF WAY
DIA	DIAMETER
	PROPOSED DRIVEWAY APRON

NOT FOR CONSTRUCTION

LINC COLE LANE
69 PLEASANT STREET
LEXINGTON, MA

DATE: 3-30-2022
PROJECT No: 21-12
DRAWN BY:
CHECKED BY:

REVISIONS

DATE	BY	DESCRIPTION
5-23-2022		NO REVISION TO THIS SHEET
7-21-2022		NO REVISION TO THIS SHEET
8-1-2022		NO REVISION TO THIS SHEET
8-24-2022	MJN	REVISIONS PER TOWN COMMENTS

COMMONWEALTH OF MASSACHUSETTS
MICHAEL J. NOVAK
No. 50666
PROFESSIONAL ENGINEER

PATRIOT Engineering
35 BEDFORD STREET, SUITE 4
LEXINGTON, MASSACHUSETTS 02420
T: (978) 726-2654
www.patriot-eng.com

PROOF PLAN
LOCATED IN
LEXINGTON, MA
(MIDDLESEX COUNTY)
PREPARED FOR
SHELDON CORP.